KONGSKILDE

300 SS (FD209)

DOUBLE ROTA HARROWS

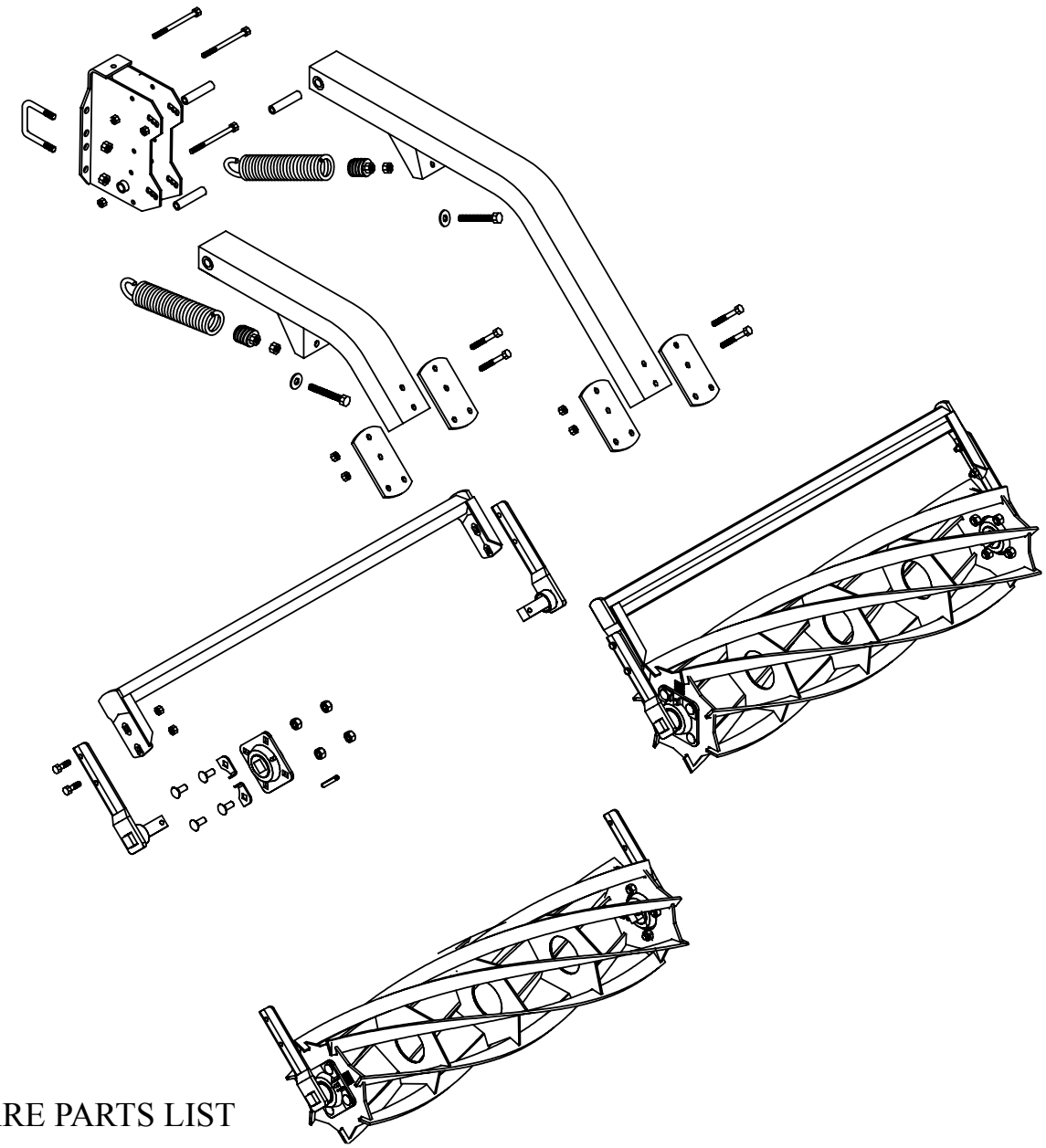

SPARE PARTS LIST

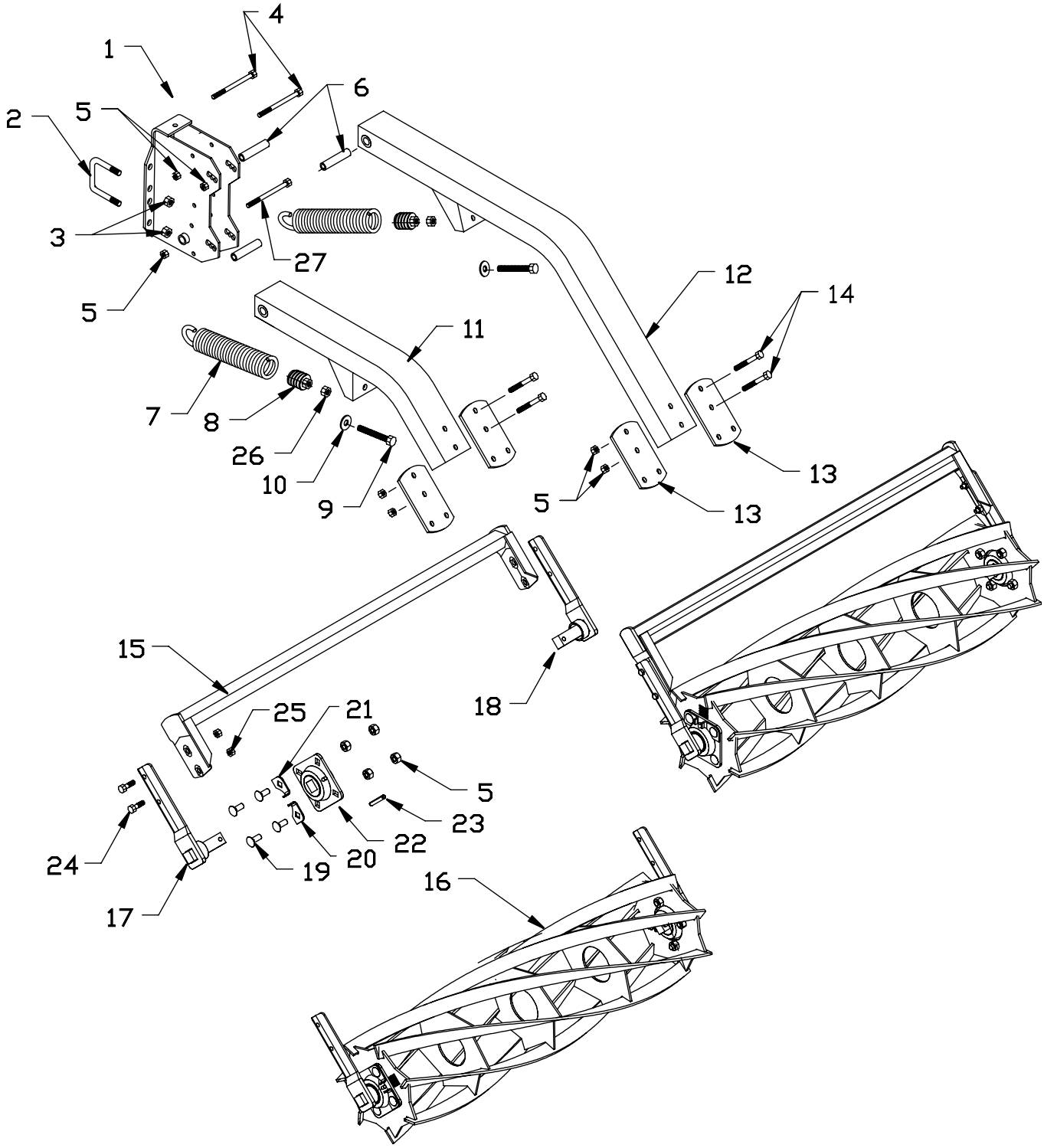
1
2
3
4
5
6
7
8
9
10
11
12
13
14
15
16
17
18
19
20
21
22
23
24
25
26
27

Fig.	Part no.	Description
1	603 151 020	Mounting Bracket
2	600 373 066	U-Bolt 5/8" x 2.5" x 4-1/4" (2800 & 3800)
3	600 366 006	Locknut 5/8"
4	600 356 030	Bolt 1/2" x 4-1/2" Gr. 5
5	600 366 030	Locknut 1/2"
6	603 150 180	Wear Bushing
7	603 150 017	Spring
8	603 150 018	Spring Insert - Grey Cast with 5/8 threaded hole
9	600 373 072	Bolt 5/8" x 5" Full thread - Gr.5
10	600 381 020	Flat Washer 5/8"
11	603 150 187	Short Hanger Arm - for Front Roller
12	603 150 188	Intermediate Hanger Arm - for Rear Roller
13	603 150 191	Mount Plate - Roller Frame
14	600 356 137	Bolt 1/2" x 3-1/2" Gr. 5
15	603 150 195	32" Roller Frame
	603 150 196	47" Roller Frame
	603 150 197	55" Roller Frame
	603 150 198	63" Roller Frame
	603 150 199	71" Roller Frame
16		For Spiral Rollers see following page.
17	603 151 262	Bearing Arm - Left
18	603 151 270	Bearing Arm - Right
19	600 361 034	Carriage Bolt 1/2" x 1-1/4"
20	603 151 241	Bearing Shield - Right
21	603 151 240	Bearing Shield - Left
22	600 451 006	Bearing FD209 - 1-1/8" SQR.
23	600 383 013	Roll Pin 3/8" x 2 1/2"
CPL	603 151 314	Bearing Arm Assembly Right (Includes 5, 18, 19, 20, 21, 22, 23,24, 25)
CPL	603 151 315	Bearing Arm Assembly Left (Includes 5, 17, 19, 20, 21, 22, 23, 24, 25)
CPL	603151316	Bearing Arm Package (Includes 603151314 and 603151315)
24	600 355 002	Bolt 3/8" x 1-1/2"
25	600 366 028	Locknut 3/8"
26	600 365 014	Nut 5/8"
27	600 356 105	Bolt 1/2" x 4" Gr. 5

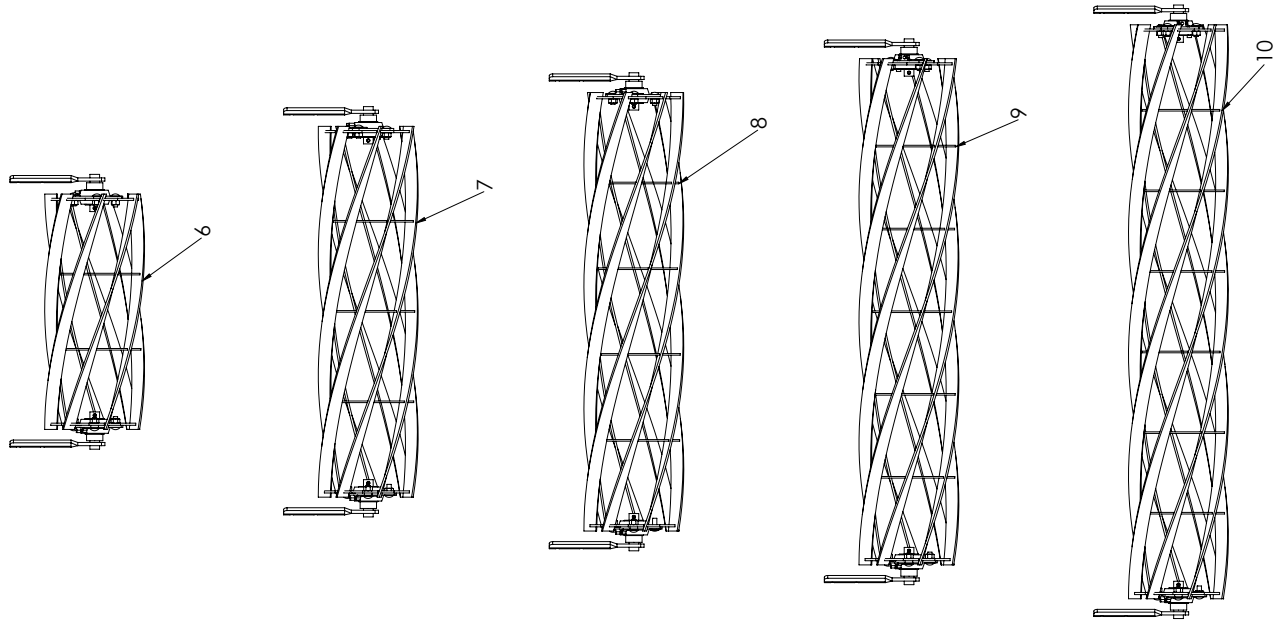
6
7
8
9
10

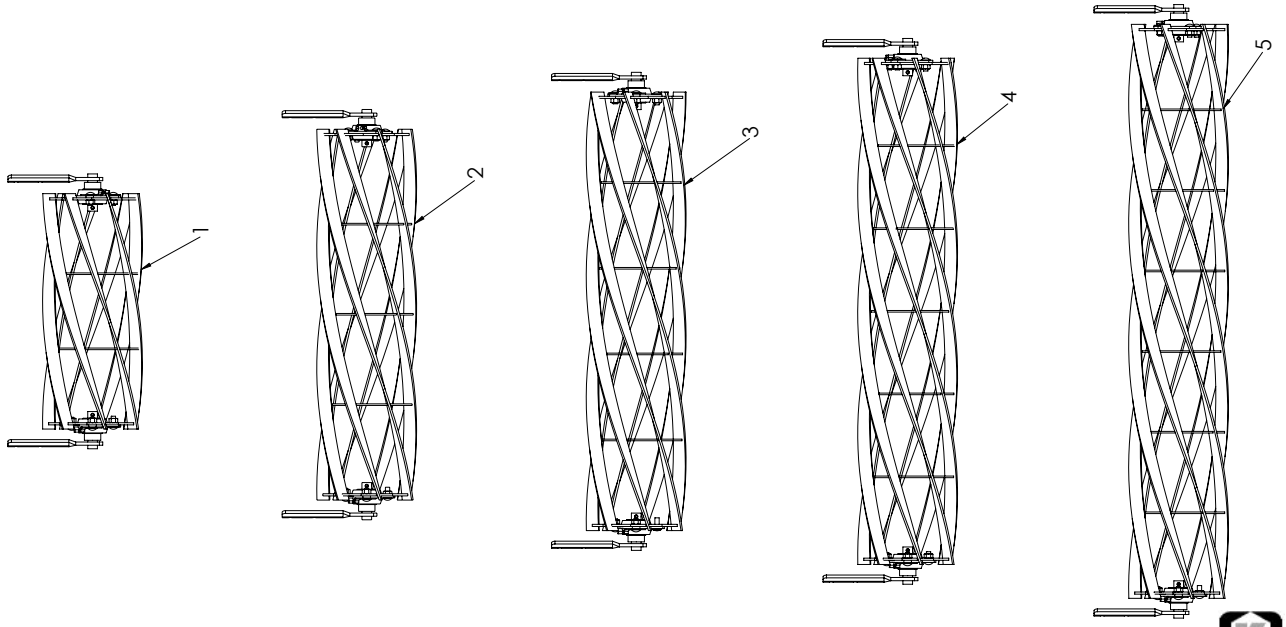
1
2
3
4
5

Fig.	Part no.	Description
1	603 151 279	32" L.H. Spiral Roller w/Bearing Arms and Bearings
2	603 151 281	47" L.H. Spiral Roller w/Bearing Arms and Bearings
3	603 151 283	55" L.H. Spiral Roller w/Bearing Arms and Bearings
4	603 151 285	63" L.H. Spiral Roller w/Bearing Arms and Bearings
5	603 151 287	71" L.H. Spiral Roller w/Bearing Arms and Bearings
6	603 151 278	32" R.H. Spiral Roller w/Bearing Arms and Bearings
7	603 151 280	47" R.H. Spiral Roller w/Bearing Arms and Bearings
8	603 151 282	55" R.H. Spiral Roller w/Bearing Arms and Bearings
9	603 151 284	63" R.H. Spiral Roller w/Bearing Arms and Bearings
10	603 151 286	71" R.H. Spiral Roller w/Bearing Arms and Bearings