KONGSKILDE

VIBRO MASTER 3000

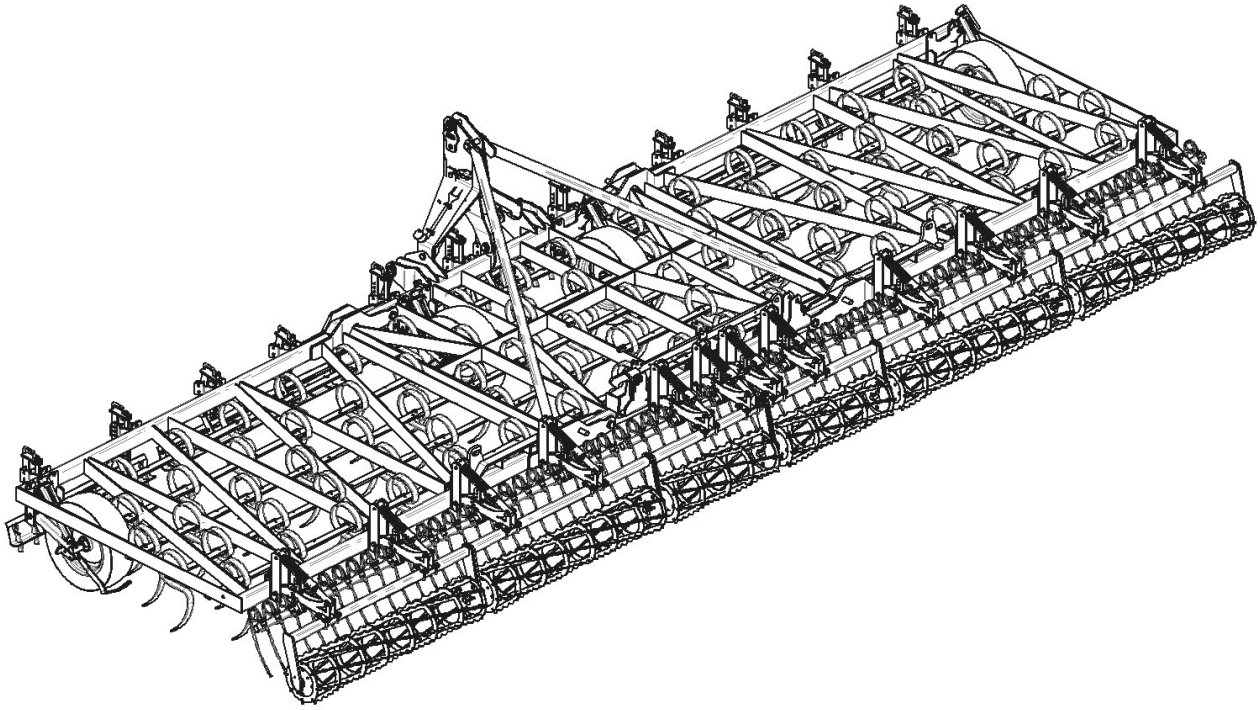

Ersatzteilliste
Spare parts list
Liste di pičce de rechange

Tab. 1

World version

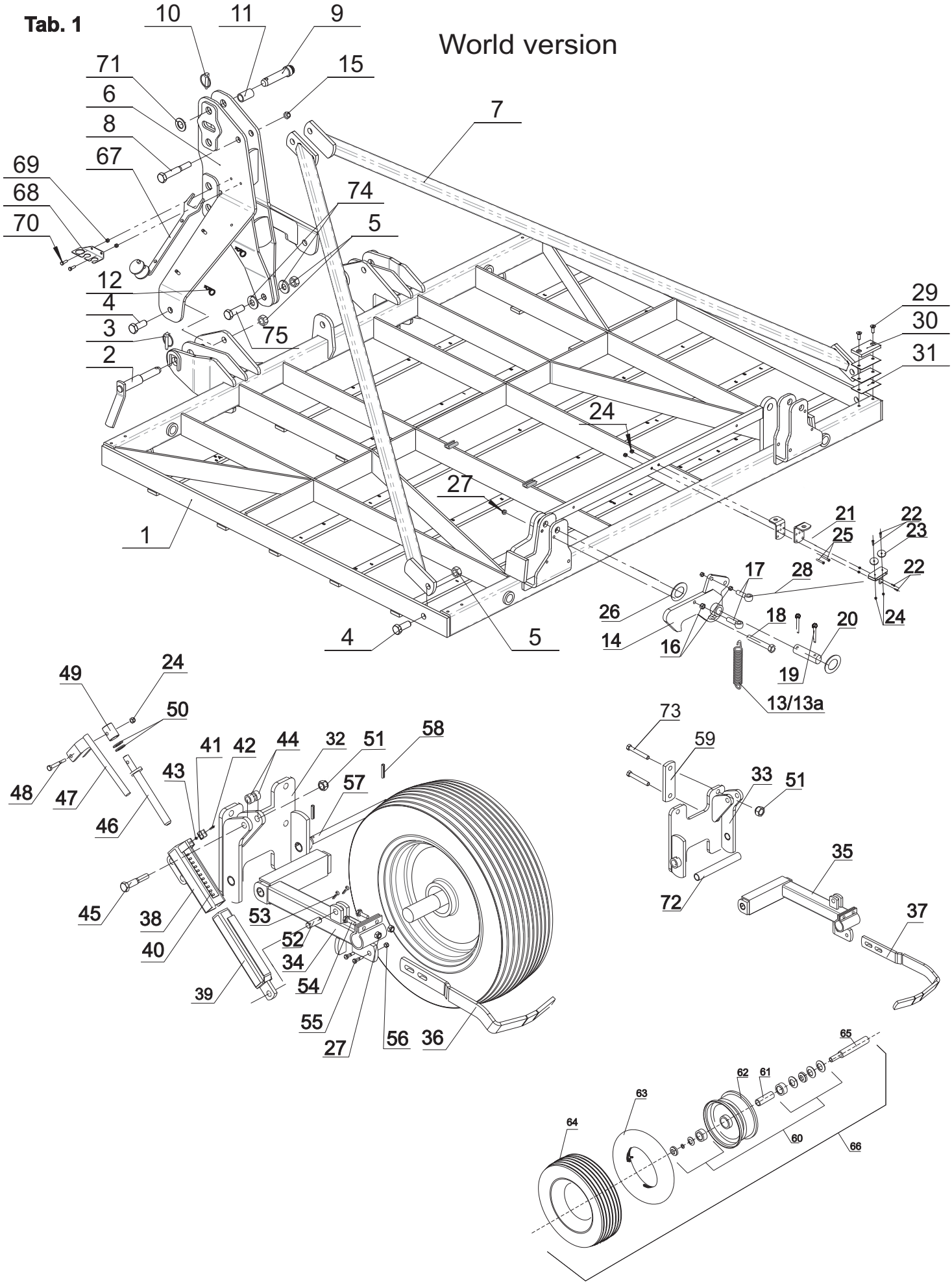

Tab. 1

Fig.	Serial no.	Part no.	Pieces	Notes		
1		300219700	1	Central frame		
2		330020004	2	PIN KAT 2/3 47,5x207		
3		300323046	2	Linch pin		
4		300304228	4	Screw	M24x60 8.8	DIN 933
5		300316040	5	Nut	M 24	DIN 985
6		300500300	1	Headstock		
7		300267700	2	Arm		
8		300304291	1	Screw	M24x140 10.9	DIN 931
9		71000186791	1	Pin cat. 3		
10		71208014530	1	Linch pin	1MM/43MM	
11		300004428	1	Distance bushing		
12		300333067	2	Safety piece		DIN 11024
13		7002150647	2	Spring for manual operate hooks		
13a		371002803	2	Spring for automatic operate hooks		
14		300264200	2	Hook		
15		300316012	1	Nut	M 24x2	DIN 985
16		300315001	2	Nut	M 10	DIN 934
17		300304262	2	Eye bolt	M10 x 40	DIN 444
18		300304043	2	Bolt	M10 x 90	DIN 931
19		300333062	4	Pin	6.3x63	DIN 94
20		101200667	2	Split bolt	25x110	
21		300005376	1	Holder valve		
22		300304156	2	Bolt	M8x30	DIN 933
23		7002001001	2	Pulley		
24		300316027	4	Nut	M8	DIN 985
25		300304163	2	Bolt	M8x70	DIN 931
26		300332035	4	Washer	M24	DIN 126
27		300316020	2	Nut	M10	DIN 985
28		300002074	2	String		
29		100304023	8	Bolt	M10x30-8.8	
30		300005362	4	Plate stop system		
31		300005404	12	Distance plate		
32		300243800	2	Wheel bracket left		
33		300243900	2	Wheel bracket right		
34		300237100	2	Wheel arm left		
35		300237200	2	Wheel arm right		
36		310004026	2	Scraper left		
37		310004025	2	Scraper right		
38		300236700	4	Spindle outer tube		
39		300236600	4	Spindle inner tube		
40		700TT30579	4	Sticker		
41		7000603228	4	Handle retained		
42		300308004	4	Bolt	M5 x 14	DIN 933
43		300316025	4	Nut	M12	DIN 985
44		300004561	8	Distance busching		
45		300304242	4	Bolt	M16x80	DIN 931
46		300221800	4	Deep adj. bolt		
47		300274700	4	Handle		
48		300304162	8	Bolt	M8x60	Din 931
49		300004638	4	Bushing		
50		300332009	8	Washer	M16	DIN 126
51		300316023	4	Nut	M16	DIN 985
52		105000667	4	Pin		
53		300333058	8	Pin	4x25	DIN 94
54		300304034	8	Bolt	M10x30	DIN 933
55		300304058	8	Bolt	M12x40	DIN 933
56		300316021	8	Nut	M12	DIN 985
57		300004948	4	Pin		
58		300323038	8	Tension pin	8x40	DIN 1481
59		300004147	1	Plate		

Tab. 1

World version

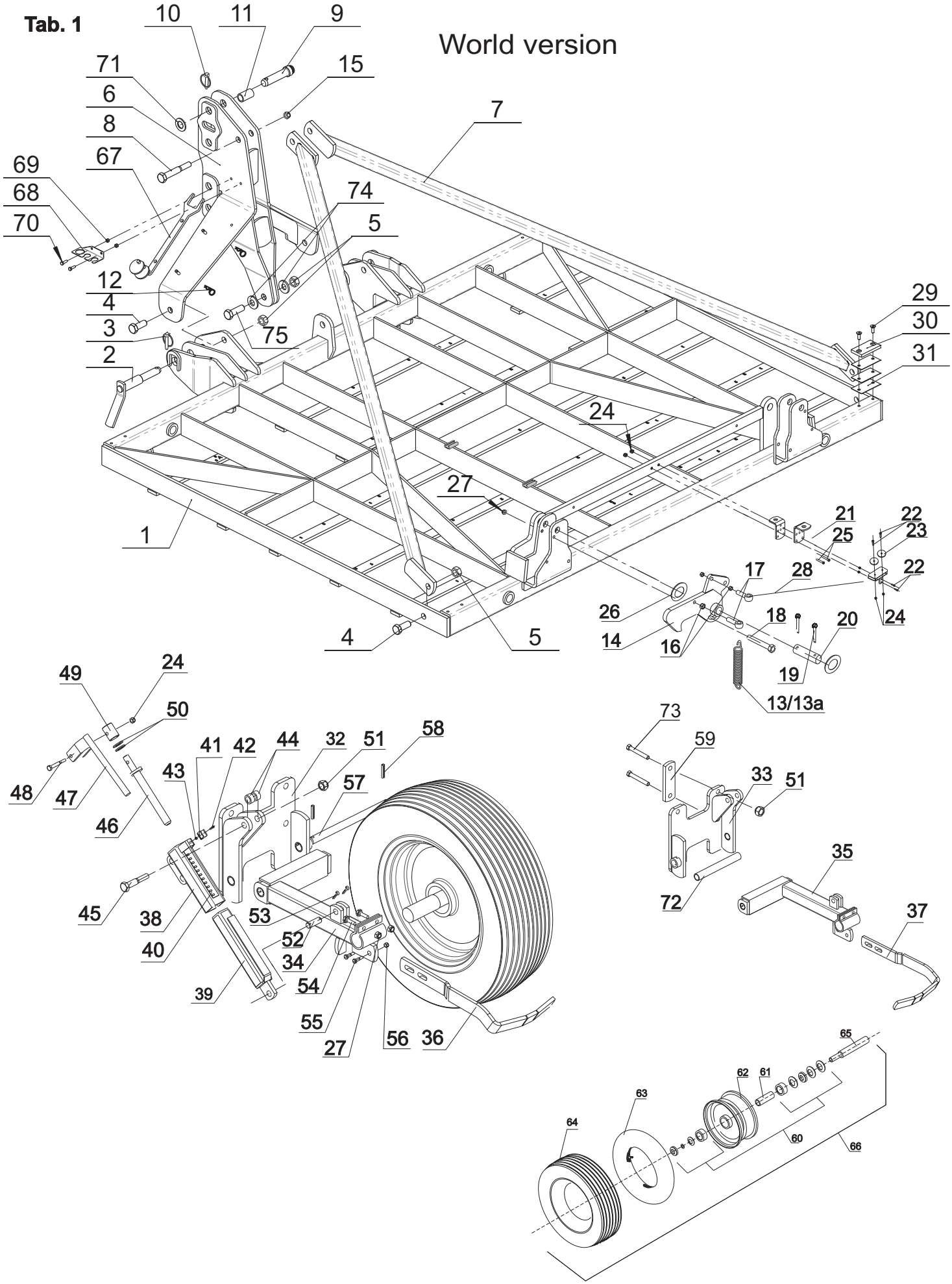

Tab. 1

Fig.	Serial no.	Part no.	Pieces	Notes			
60		310183400	1	Bearing set for wheel			
61		100423062	1	Spacer	35/31x64.6		
62		100423073	1	Rim			
63		100423071	1	Tube	24x8.00-14.5		
64		100423070	1	Tyre			
65		310004002	Axle	40x235			
66		310160400	Wheel cpl.	24x8.00-14.5			
67		300227900	1	Tool adj.			
68		300006149	1	Parking plate			
69		300316027	2	Nut	M8	DIN 985	
70		300304155	2	Bolt	M8x25		DIN 933
71		300332037	1	Washer			DIN 126
72		300006937	4	Bush	26.9 x 2.65 L=218		
73		300304078	2	Bolt	M16x110		DIN 931
74		300332090	2	Washer	M24		DIN 6796
75		300304126	1	Bolt	M24x75		DIN 931

Tab. 1

Europe version

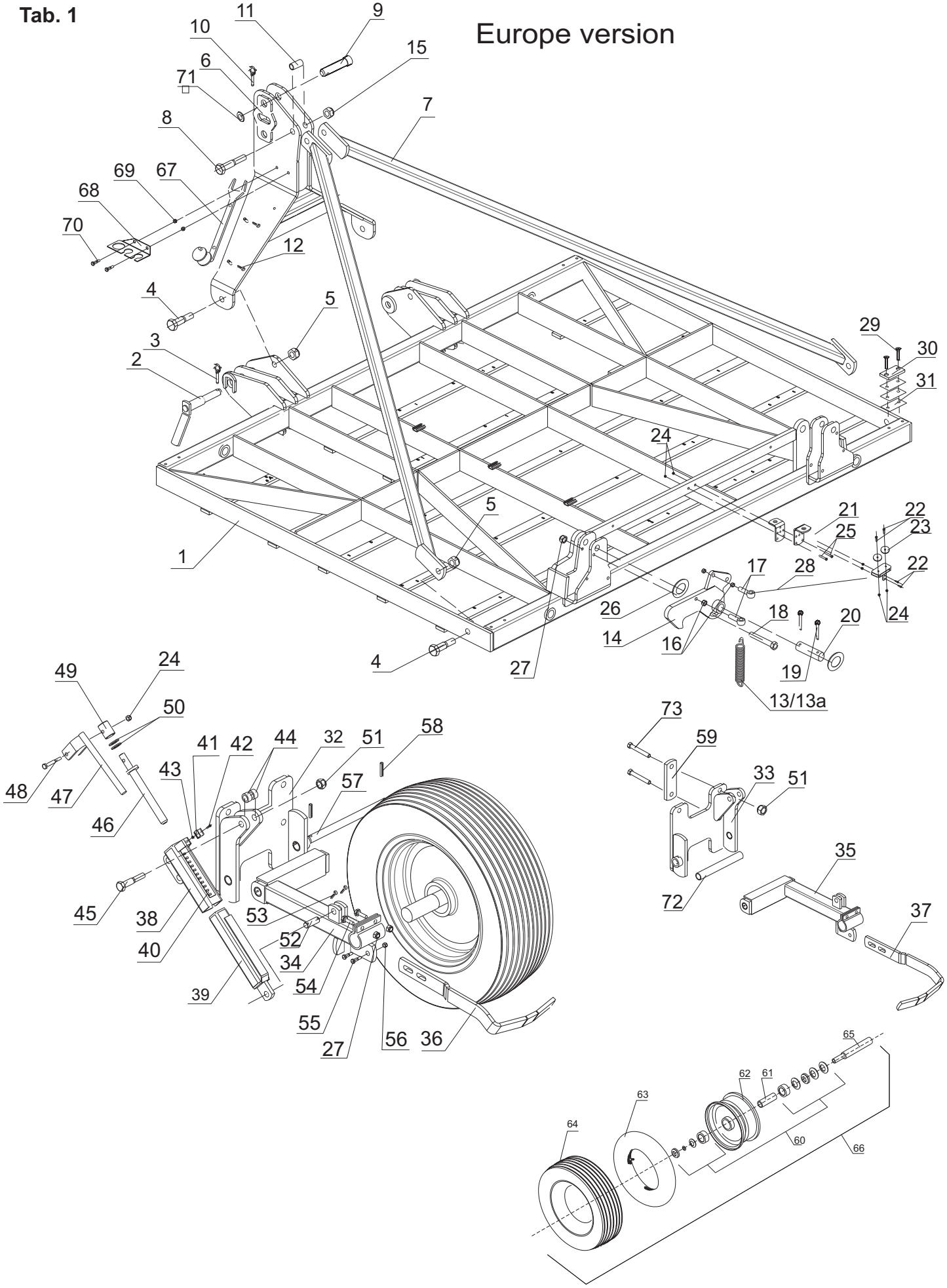

Tab. 1

Fig.	Serial no.	Part no.	Pieces	Notes		
1		300219700	1	Central frame		
2		300006047	2	PIN KAT 2/3 47,5x207		
3		300323046	2	Linch pin		
4		300304228	4	Screw	M24x60 8.8	DIN 933
5		300316040	5	Nut	M 24	DIN 985
6		300267600	1	Headstock		
7		300267700	2	Arm		
8		300304291	1	Screw	M24x140 10.9	DIN 931
9		71000186791	1	Pin cat. 3		
10		71208014530	1	Linch pin	1MM/43MM	
11		300004428	1	Distance bushing		
12		300333067	2	Safety piece		DIN 11024
13		7002150647	2	Spring for manual operate hooks		
13a		371002803	2	Spring for automatic operate hooks		
14		300264200	2	Hook		
15		300316012	1	Nut	M 24x2	DIN 985
16		300315001	2	Nut	M 10	DIN 934
17		300304262	2	Eye bolt	M10 x 40	DIN 444
18		300304043	2	Bolt	M10 x 90	DIN 931
19		300333062	4	Pin	6.3x63	DIN 94
20		101200667	2	Split bolt	25x110	
21		300005376	1	Holder valve		
22		300304156	2	Bolt	M8x30	DIN 933
23		7002001001	2	Pulley		
24		300316027	4	Nut	M8	DIN 985
25		300304163	2	Bolt	M8x70	DIN 931
26		300332035	4	Washer	M24	DIN 126
27		300316020	2	Nut	M10	DIN 985
28		300002074	2	String		
29		100304023	8	Bolt	M10x30-8.8	
30		300005362	4	Plate stop system		
31		300005404	12	Distance plate		
32		300243800	2	Wheel bracket left		
33		300243900	2	Wheel bracket right		
34		300237100	2	Wheel arm left		
35		300237200	2	Wheel arm right		
36		310004026	2	Scraper left		
37		310004025	2	Scraper right		
38		300236700	4	Spindle outer tube		
39		300236600	4	Spindle inner tube		
40		700TT30579	4	Sticker		
41		7000603228	4	Handle retained		
42		300308004	4	Bolt	M5 x 14	DIN 933
43		300316025	4	Nut	M12	DIN 985
44		300004561	8	Distance busching		
45		300304242	4	Bolt	M16x80	DIN 931
46		300221800	4	Deep adj. bolt		
47		300274700	4	Handle		
48		300304162	8	Bolt	M8x60	Din 931
49		300004638	4	Bushing		
50		300332009	8	Washer	M16	DIN 126
51		300316023	4	Nut	M16	DIN 985
52		105000667	4	Pin		
53		300333058	8	Pin	4x25	DIN 94
54		300304034	8	Bolt	M10x30	DIN 933
55		300304058	8	Bolt	M12x40	DIN 933
56		300316021	8	Nut	M12	DIN 985
57		300004948	4	Pin		
58		300323038	8	Tension pin	8x40	DIN 1481
59		300004147	1	Plate		

Tab. 1

Europe version

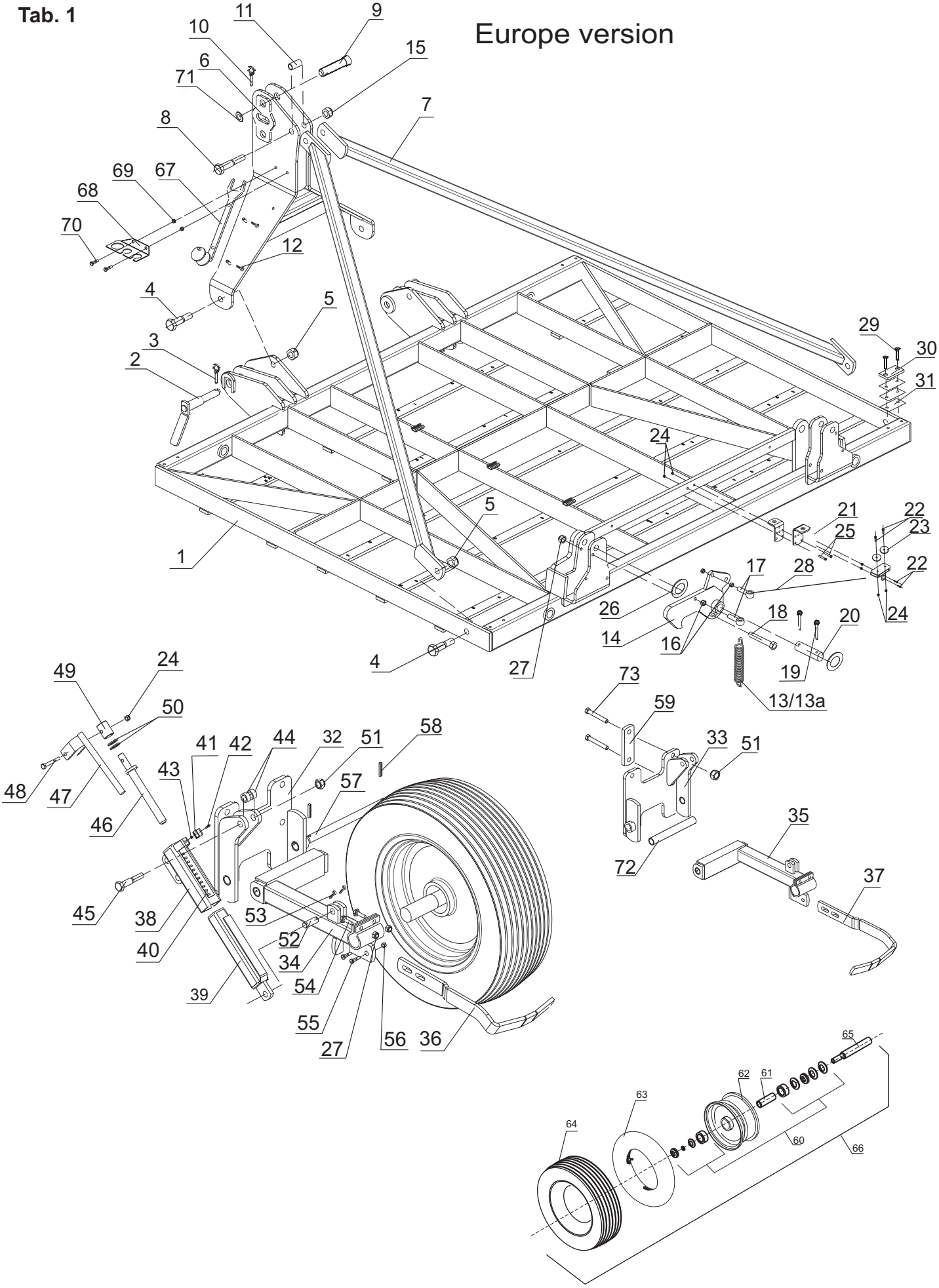

Tab. 1

Fig.	Serial no.	Part no.	Pieces	Notes			
60		310183400	1	Bearing set for wheel			
61		100423062	1	Spacer	35/31x64.6		
62		100423073	1	Rim			
63		100423071	1	Tube	24x8.00-14.5		
64		100423070	1	Tyre			
65		310004002	Axle	40x235			
66		310160400	Wheel cpl.	24x8.00-14.5			
67		300227900	1	Tool adj.			
68		300006149	1	Parking plate			
69		300316027	2	Nut	M8	DIN 985	
70		300304155	2	Bolt	M8x25		DIN 933
71		300332037	1	Washer			DIN 126
72		300006937	4	Bush	26.9 x 2.65 L=218		
73		300304078	2	Bolt	M16x110		DIN 931

Tab. 2

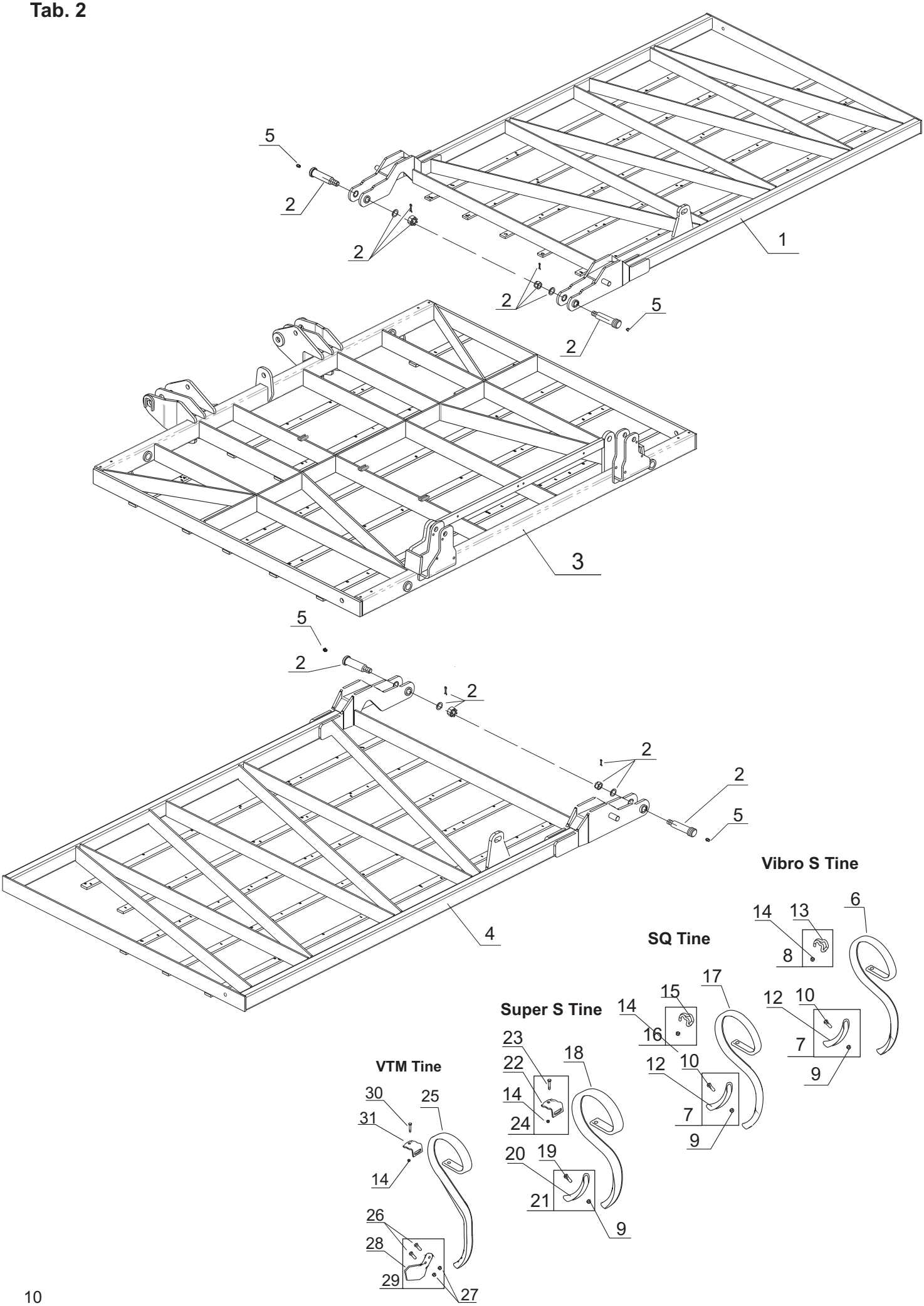
5
2
2
1
2
5
2
3
5
2
2
2
2
5
4
Vibro S Tine
6
14
13
8
SQ Tine
17
15
14
16
12
10
7
9
Super S Tine
23
22
14
24
18
20
19
21
9
VTM Tine
30
31
14
25
26
28
29
27

Tab. 2

Fig.	Serial no.	Part no.	Pieces	Notes		
1		330020254	1	Right wing	5,5m	
1		300219900	1	Right wing	8.5m	
1		300220300	1	Right wing	7.5m	
1		300220500	1	Right wing	6.5m	
2		71208112007	4	Spring pin with nut	ř35x130mm	
3		300219700	1	Central frame		
4		330020253	1	Left wing	5,5 m	
4		300219800	1	Left wing	8.5m	
4		300220200	1	Left wing	7.5m	
4		300220400	1	Left wing	6.5m	
5		300421009	4	Grease nipple	M10x1	
6		101000669	1	Vibro S Tine cpl 6+7		Kit include 1+1pcs
7		101000640	1	Share cpl 9+10+12		Kit include 1+1+1 pcs
8		101 000507	1	Clamp cpl 13+14		Kit include 1+1 pcs
9			1	Nut M10		
10			1	Bolt M10 x 35		
11		100323040	1	Bolt+nut 9+10	Package 50pcs	Kit include 50+ 50 pcs
12			1	Share		
13			1	Clamp		
14			1	Nut M12		DIN 985
15			1	Clamp		
16		101000742	1	Clamp cpl 14+15		Kit include 1+1 pcs
17		101000740	1	SQ tine cpl 7+17		Kit include 1+1pcs
18		101000947	1	Super S tine cpl 17+20		Kit include 1+1pcs
19			1	Bolt	M10x45	
20			1	Share		
21		101000953	1	Share cpl 9+19+20		Kit include 1+1+1 pcs
22			1	Clamp		
23			1	Bolt	M12x50	
24		300277400	1	Clamp cpl 14+22+23		Kit include 1+1+1 pcs
25		101000725	1	VTM tine		
26			2	Bolt M12x48		
27			2	Nut M12		
28			1	Share for VTM tines		
29		101000551	1	Share cpl 26+27+28		Kit include 2+1+1 pcs
30		100304036	1	Bolt M12x50		
31		101000701	1	Clamp for VTM tine		

Tab. 3

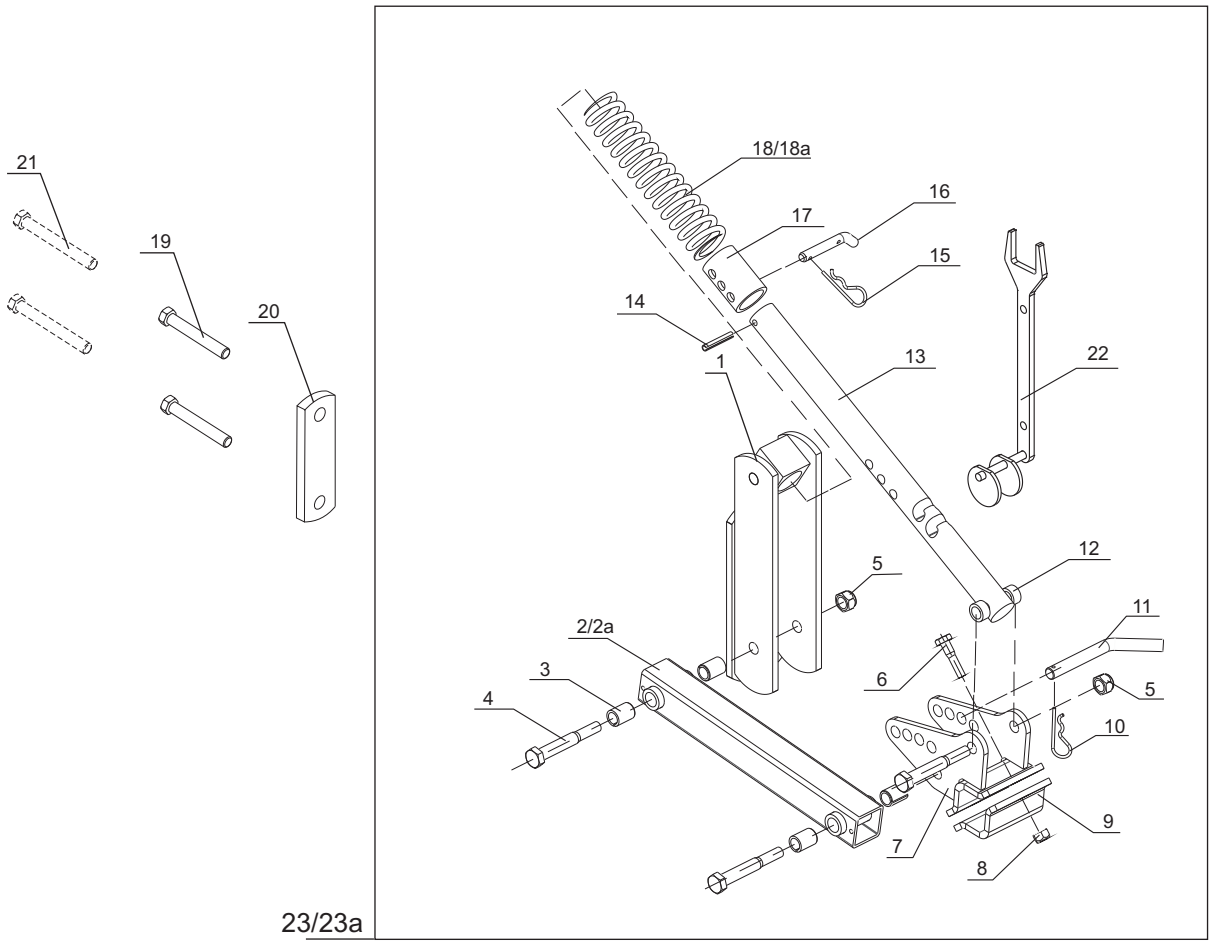

Each working width has a two shorter roller arms placed behind the rear hinge of the wing and fixed by ordinary bolts and plates, not U-bolts.

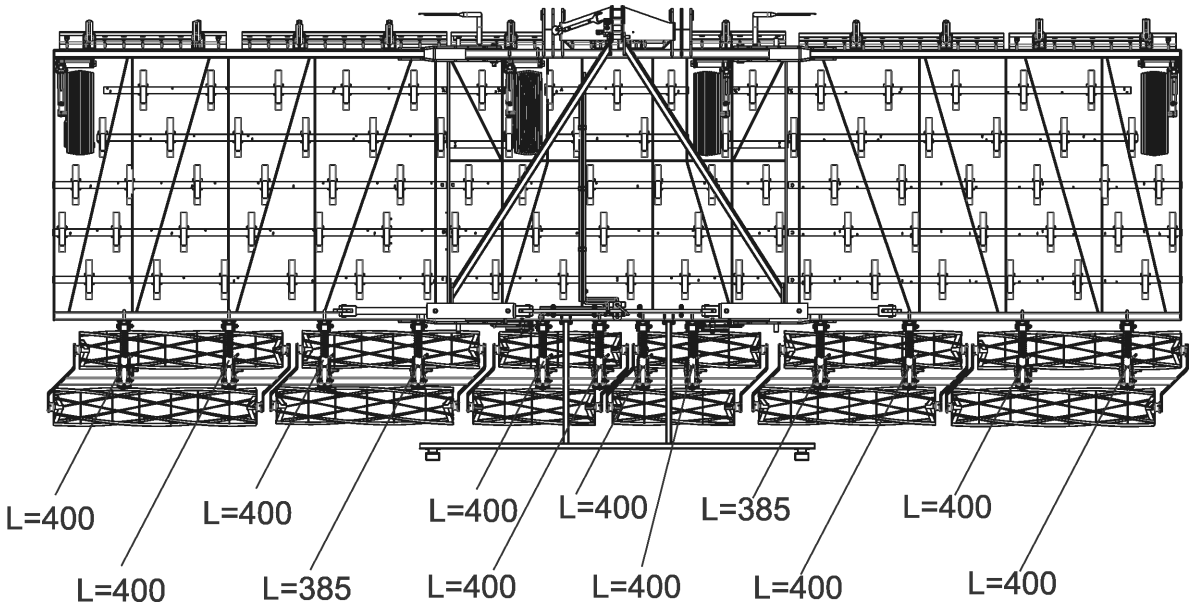

Tab. 3

Fig.	Serial no.	Part no.	Pieces	Notes		
1		300227600	1	Roller arm bracket		
2		300227700	1	Arm	L=400 mm	
2a		300273800	1	Arm short	L=385 mm	
3		300005273	4	Bushes		
4		300304078	3	Bolt	M16x110	DIN 931
5		300316023	3	Nut	M16	DIN 985
6		300304060	2	Bolt	M12x50	DIN 933
7		300228100	1	Bracket angle adj.		
8		300316021	2	Nut	M12	DIN 985
9		300004558	1	Flat bar bend.		
10		100333011	1	Pin clip		
11		300004616	1	Pin angle adj.		
12		300004561	2	Distance bushing	25x17x13	
13		300004659	1	Rod		
14		300323039	1	Tension pin	8x50	DIN1481
15		300333067	1	Safety piece		DIN 11024
16		200059870	1	Pin		
17		300004660	1	Sleeve		
18		310004215	1	Spring	L=243 mm	
18a		104051013	1	Spring for shorter arm	L=227 mm	
19		300304078	2	Bolt	M16x110	DIN 931
20		300004147	1	Plate		
21		100306095	2	Bolt (shorter arm)	M16x140	DIN 931
22		300227900	1	Tool		
23		300229300	1	Roller arm cpl.		
23a		300273900	1	Roller arm short cpl.		

Tab. 4

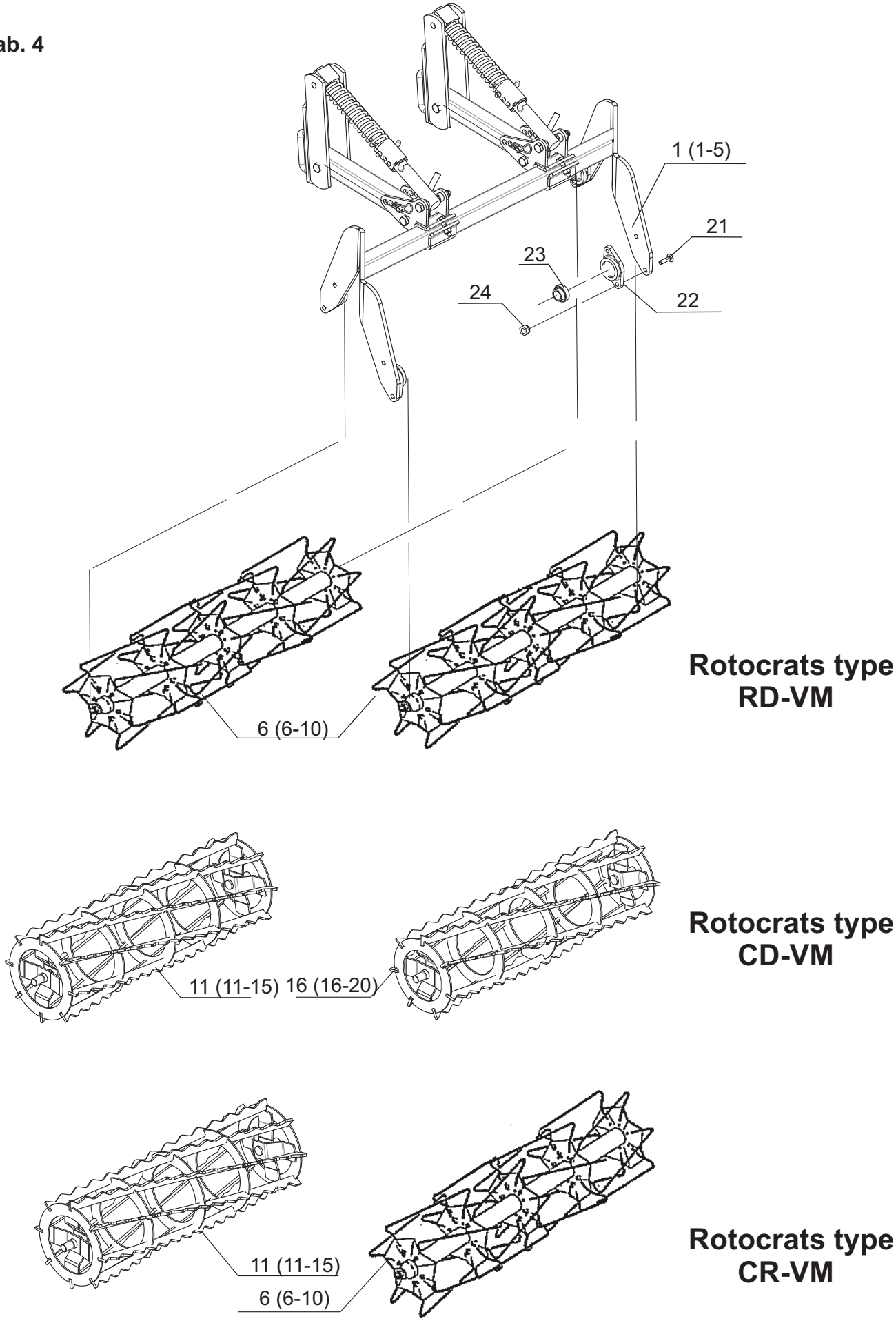
1 (1-5)
21
23
24
22
6 (6-10)
Rotocrats type
RD-VM
11 (11-15)
16 (16-20)
Rotocrats type
CD-VM
11 (11-15)
6 (6-10)
Rotocrats type
CR-VM

Tab. 4

Fig.	Serial no.	Part no.	Pieces	Notes		
1		300283400	1/6	Rollers frame	,,1000”	
2		300283500	2	Rollers frame	,,1200”	
3		300283600	2	Rollers frame	,,1400”	
4		300283700	2	Rollers frame	,,1600”	
5		330020197	2	Rollers frame	,,1800”	
6		300286400	1/2	R-roller	,,1000”	
7		300286500	1/2	R-roller	,,1200”	
8		300286600	1/2	R-roller	,,1400”	
9		300286700	1/2	R-roller	,,1600”	
10		330020195	1/2	R-roller	,,1800”	
11		300281700	1/2	Cage roller D=320mm	,,1000”	
12		300281900	1/2	Cage roller D=320mm	,,1200”	
13		300282200	1/2	Cage roller D=320mm	,,1400”	
14		300282500	1/2	Cage roller D=320mm	,,1600”	
15		330020201	1/2	Cage roller D=320mm	,,1800”	
16		300281600	1/2	Cage roller D=290mm	,,1000”	
17		300281800	1/2	Cage roller D=290mm	,,1200”	
18		300282100	1/2	Cage roller D=290mm	,,1400”	
19		300282400	1/2	Cage roller D=290mm	,,1600”	
20		330020199	1/2	Cage roller D=290mm	,,1800”	
21		7000511512	1	Bolt	M10x35	DIN 603
22		300006912	1	Housing	FYTB 505M	
23		300006913	1	Bearing	YARAG 205	
24		300316020	1	Nut	M12	DIN 985

Tab. 5

Rotocrats type: RD-VM

For Cultivators type:

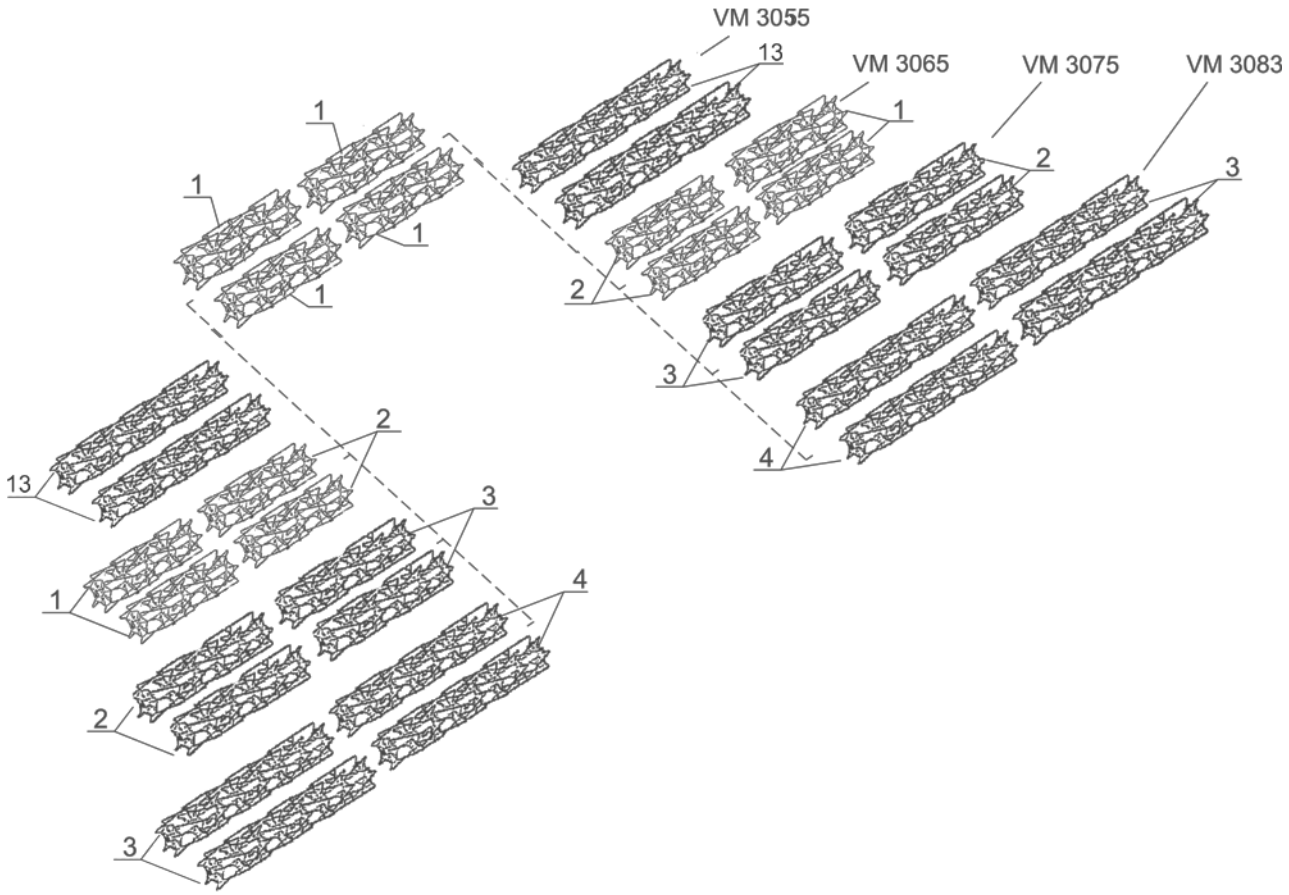

Rotocrats type: CD-VM

For Cultivators type:

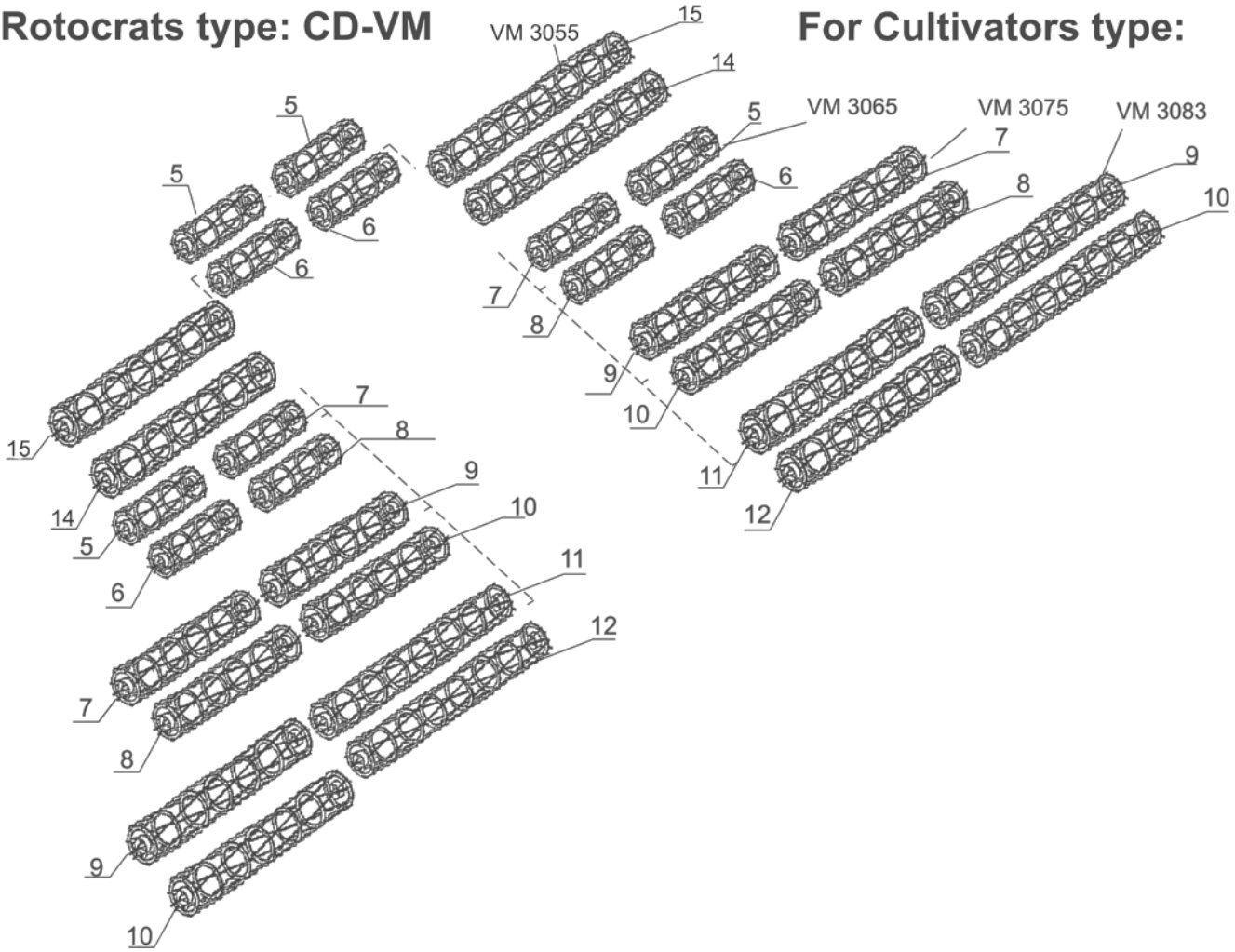

Tab. 5

Fig.	Serial no.	Part no.	Pieces	Notes
1		300286400	1/2	R-roller ,,1000”
2		300286500	1/2	R-roller ,,1200”
3		300286600	1/2	R-roller ,,1400”
4		300286700	1/2	R-roller ,,1600”
5		300281700	1/2	Cage roller D=320mm ,,1000”
6		300281600	1/2	Cage roller D=290mm ,,1000”
7		300281900	1/2	Cage roller D=320mm ,,1200”
8		300281800	1/2	Cage roller D=290mm ,,1200”
9		300282200	1/2	Cage roller D=320mm ,,1400”
10		300282100	1/2	Cage roller D=290mm ,,1400”
11		300282500	1/2	Cage roller D=320mm ,,1600”
12		300282400	1/2	Cage roller D=290mm ,,1600”
13		330020195	1/2	R-roller ,,1800”
14		330020199	1/2	Cage roller D=290mm ,,1800”
15		330020201	1/2	Cage roller D=320mm ,,1800”

Tab. 6

Rotocrats type: CR-VM

For Cultivators type:

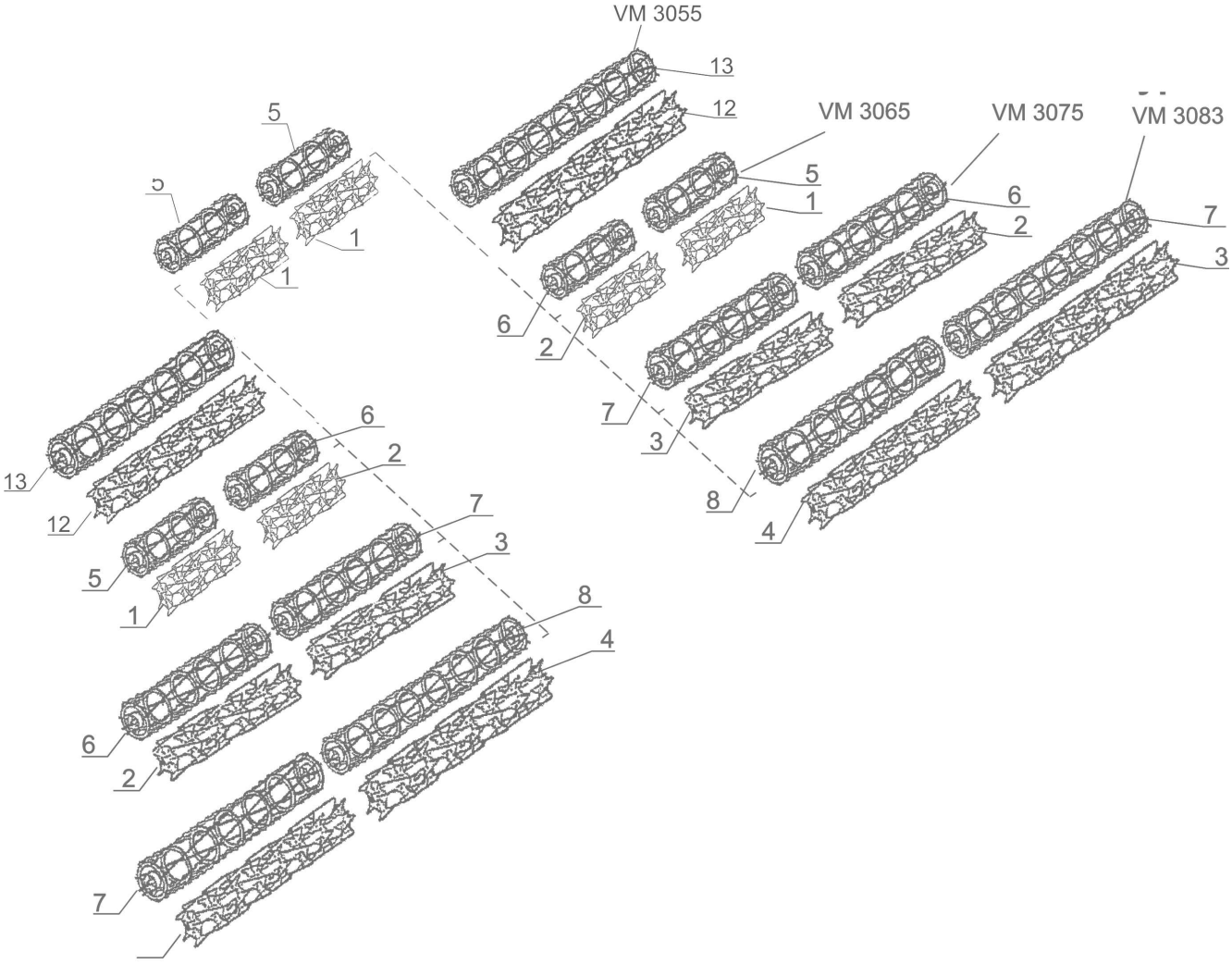

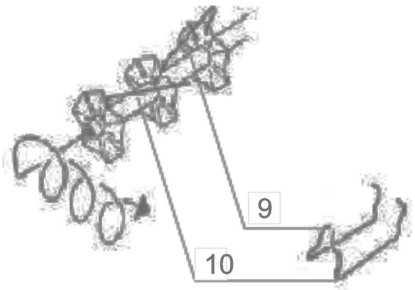

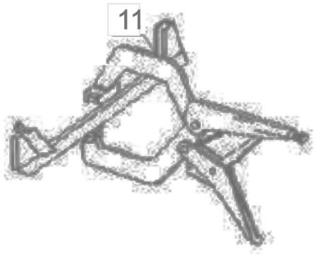

Tab. 6

Fig.	Serial no.	Part no.	Pieces	Notes
1		300286400	1/2	R-roller ,,1000”
2		300286500	1/2	R-roller ,,1200”
3		300286600	1/2	R-roller ,,1400”
4		300286700	1/2	R-roller ,,1600”
5		300281700	1/2	Cage roller D=320mm ,,1000”
6		300281900	1/2	Cage roller D=320mm ,,1200”
7		300282200	1/2	Cage roller D=320mm ,,1400”
8		300282500	1/2	Cage roller D320mm ,,1600”
9		103000486		RH Replacable Rotarod
10		103000487		LH replaceable Rotarod
11		103000610		Rota harrow Tine Wrench
12		330020195	1/2	R-roller ,,1800”
13		330020201	1/2	Cage roller D=320mm ,,1800”
				Note: To distinguist between RH and LH rotorods, hold the rod in your hand like a pistiol, with the ends of the rods upwards. The rod will either lay to the right or to the left.

Tab. 7

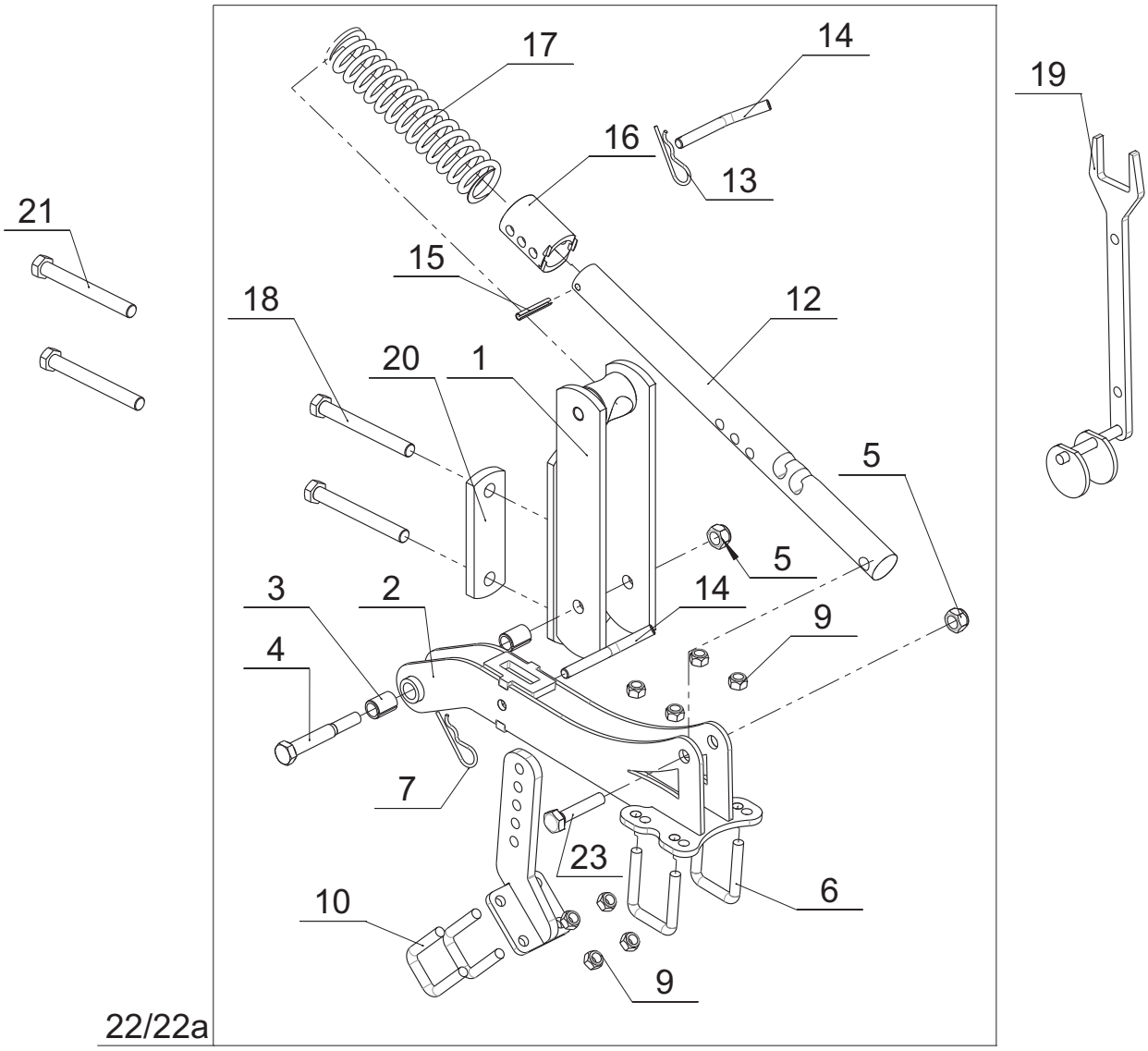

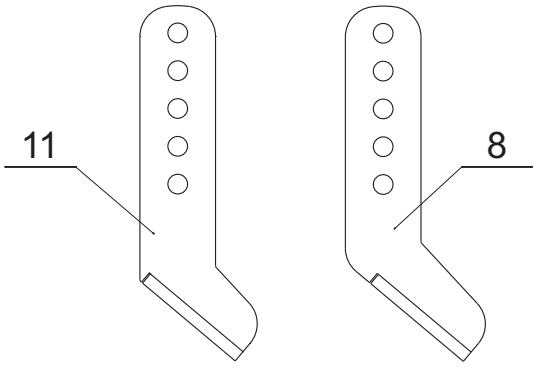

Each working width has two shorter holders (11) instead (8) placed behind rear hinge of the wing. Complete arm is fixed by bolts (21) instead (18).

Tab. 7

Fig.	Serial no.	Part no.	Pieces	Notes		
1		300227600	1	Roller arm bracket		
2		300432600	1	Arm		
2a		300005273	1	Bushes		
3		300005273	4	Bushes		
4		300304078	3	Bolt	M16x110	DIN 931
5		300316023	3	Nut	M16	DIN 985
6		71208007930	1	U-Bolt	M12x51x75	
7		300333067	1	Pin clip		DIN 11024
8		330020110	1	Handle		
9		300316021	1	Nut	M12	DIN 985
10		7203307005	2	U-bolt	M12x41x65	
11		330020100	2	Handle behind hinge	25x17x13	
12		300004659	1	Rod		
13		300316023	2	Nut	M16	DIN 985
14		200059870	2	Pin		
15		300323039	1	Tension pin	8x50	DIN 1481
16		300004660	1	Sleeve		
17		310004215	1	Spring	L=243 mm	
17a		104051013	1	Spring for shorter arm	L=227 mm	
18		300304078	1	Bolt	M16x110	DIN 931
19		300227900	1	Tool		
20		300004147	1	Plate		
21		100306095	2	Bolt M16x140 (behind hinge)		DIN 931
22		330020033	1	Roller arm cpl.		
22a		330020034	1	Roller arm cpl. (behind hinge)		

Tab. 8

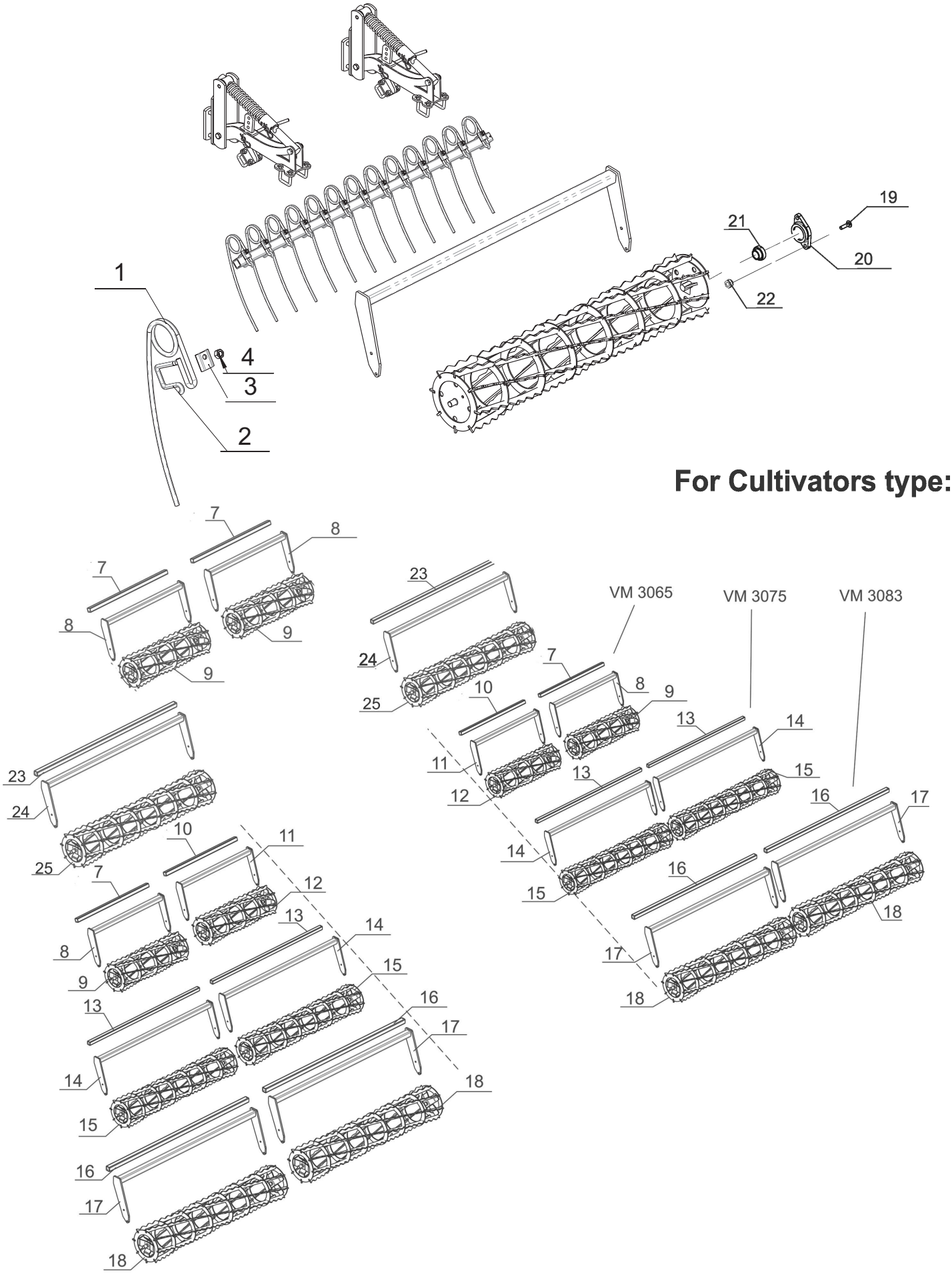
1
2
3
4
19
20
21
22
For Cultivators type:
VM 3065
VM 3075
VM 3083
7
8
9
10
11
12
13
14
15
16
17
18
23
24
25

Tab. 8

Fig.	Serial no.	Part no.	Pieces	Notes		
1		330020031	1	MAX FLOW 2014	d=10mm	
2		71209026506	1	U-bolt	M12	
3		300006432	1	Washer		
4		300315003	1	Nut	M12	DIN 934
5		300316023	3	Nut	M16	DIN 985
6		71208007930	1	U-Bolt	M12x51x75	
7		300006272	1	Beam	L=950	
8		300247800	1	Roller frame	L=1000	
9		300281700	1	Cage roller D=320mm	L=1000	
10		300006273	1	Beam	L=1280	
11		300247900	1	Roller frame	L=1200	
12		300281900	1	Cage roller D=320mm	L=1200	
13		300006274	1	Beam	L=1400	
14		300248100	1	Roller frame	L=1400	
15		300282200	1	Cage roller D=320	L=1400	
16		300006275	1	Beam	L=1600	
17		300248200	1	Roller frame	L=1600	
18		300282500	1	cage roller D=320	L=1600	
19		7000511512	1	Bolt	M10x35	DIN 603
20		300006912	1	Housing	FYTB 505M	
21		300006913	1	Bearing	YARAG 205	
22		300316020	1	Nut	M12	DIN 985
23		330020211	1	Beam	L=1800	
24		330020209	1	Roller frame	L=1800	
25		330020201	1	Cage roller D=320	L=1800	

Tab. 9

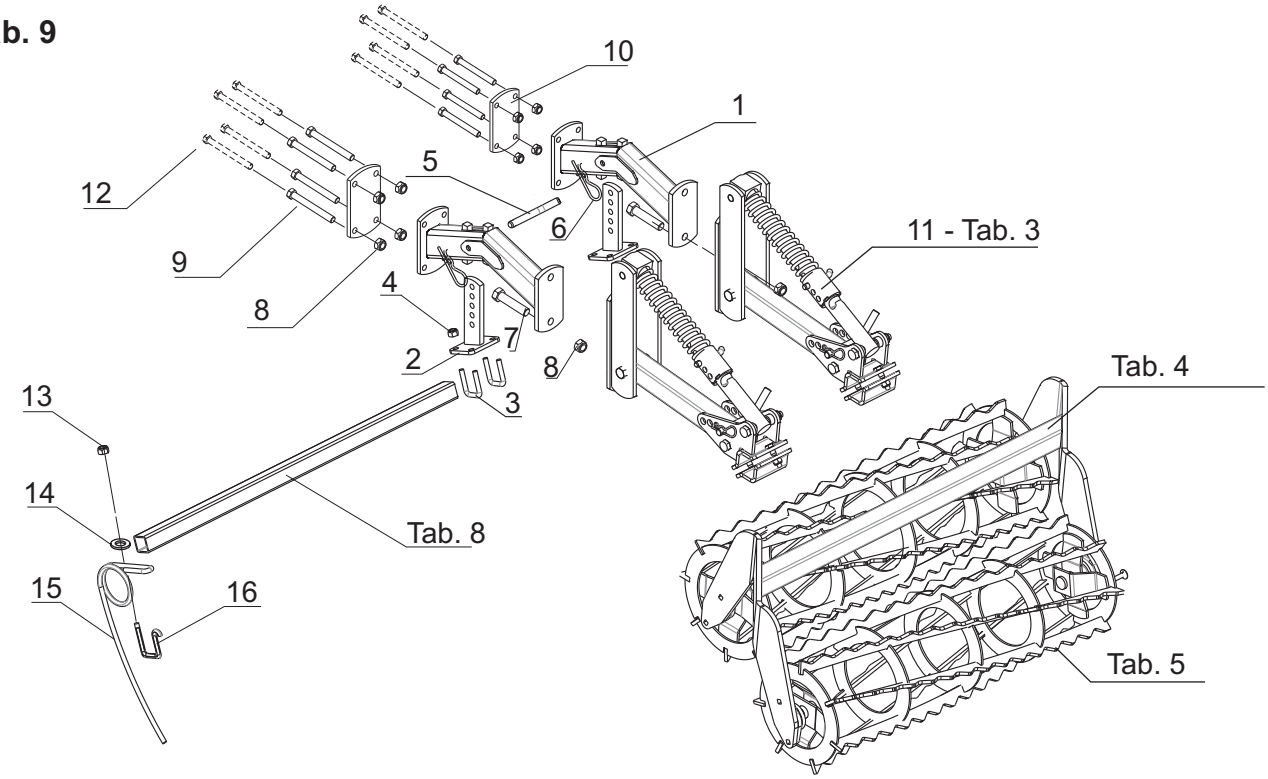

Each working width has two shorter extensions placed behind the rear hinge of the wing and bolted by standard plates and longer bolts.

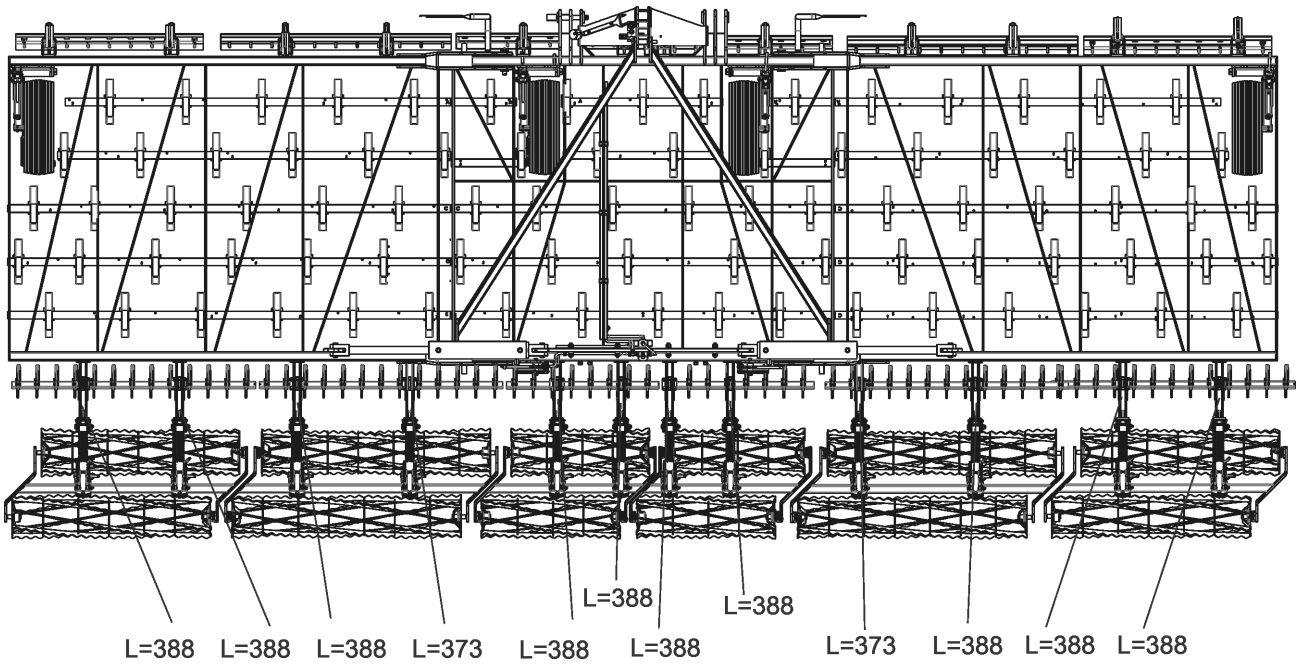

Tab. 9

Fig.	Serial no.	Part no.	Pieces	Notes		
1		300294800	10	Extension	L=388mm	
1a		300294900	2	Extension short	L=373mm	
2		300284100	12	Bracket height adj.		
3		7203307005	48	U-bolt	M12x41x65	
4		300316021	1	Nut	M12	DIN 985
5		200059870	12	Pin		
6		300333067	12	Pin clip		DIN 11024
7		300304092	1	Bolt	M16x40 8.8	DIN 933
8		300316023	10	Nut	M16	DIN 985
9		300304078	8	Bolt	M16x110	DIN931
10		300006911	2	Plate		
11		300229300	12	Arm cpl.	Tab.3	
12		100306095	8	Bolt	M16x140	DIN 931
13		300315003	1	Nut	M12	DIN 934
14		300006432	1	Washer		
15		300006281	1	Max Flow tine		
16		71209026506	1	Clamp	M12	

Tab. 9

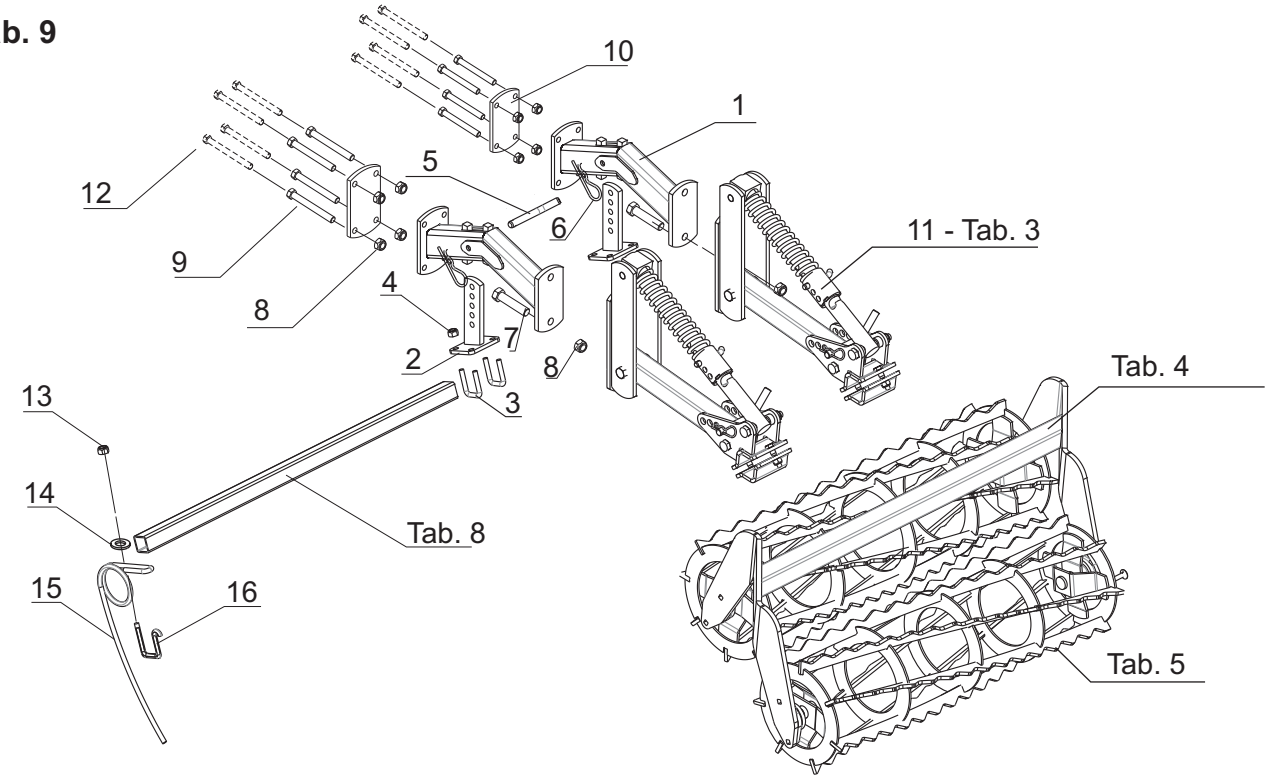

Rotocrats type: CDL-VM 3

For Cultivators type:

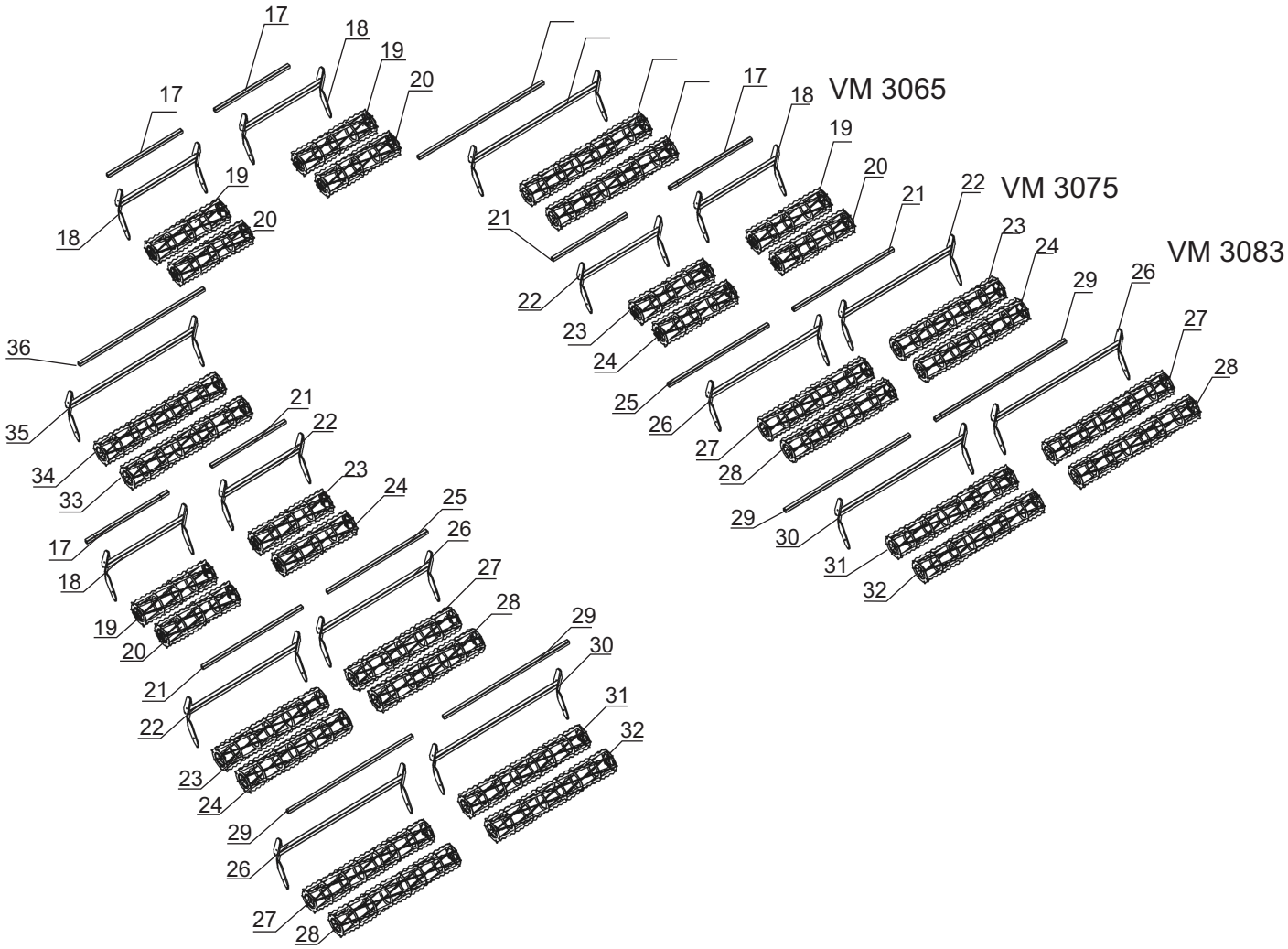

Tab. 9

Fig.	Serial no.	Part no.	Pieces	Notes		
1		300294800	10	Extension	L=388mm	
1a		300294900	2	Extension short	L=373mm	
2		300284100	12	Bracket height adj.		
3		7203307005	48	U-bolt	M12x41x65	
4		300316021	1	Nut	M12	DIN 985
5		200059870	12	Pin		
6		300333067	12	Pin clip		DIN 11024
7		300304092	1	Bolt	M16x40 8.8	DIN 933
8		300316023	10	Nut	M16	DIN 985
9		300304078	8	Bolt	M16x110	DIN931
10		300006911	2	Plate		
11		300229300	12	Arm cpl.	Tab.3	
12		100306095	8	Bolt	M16x140	DIN 931
13		300315003	1	Nut	M12	DIN 934
14		300006432	1	Washer		
15		300006281	1	Max Flow tine		
16		71209026506	1	Clamp	M12	
17		300006272	1	Beam	L=950mm	
18		300283400	1	Rollers frame	L=1000mm	
19		300281700	1	Cage roller D=320mm	L=1000mm	
20		300281600	1	Cage roller D=290mm	L=1000mm	
21		300006273	1	Beam	L=1280mm	
22		300283500	1	Rollers frame	L=1200mm	
23		300281900	1	Cage roller D=320mm	L=1200mm	
24		300281800	1	Cage roller D=290mm	L=1200mm	
25		300006274	1	Beam	L=1400mm	
26		300283600	1	Rollers frame	L=1400mm	
27		300282200	1	Cage roller D=320mm	L=1400mm	
28		300282100	1	Cage roller D=290mm	L=1400mm	
29		300006275	1	Beam	L=1600mm	
30		300283700	1	Rollers frame	L=1600mm	
31		300282500	1	Cage roller D=320mm	L=1600mm	
32		300282400	1	Cage roller D=290mm	L=1600mm	
33		330020199	1	Cage roller D=290mm	L=1800mm	
34		330020201	1	Cage roller D=320mm	L=1800mm	
35		330020197	1	Rollers frame	L=1800mm	
36		330020211	1	Beam	L=1800mm	

Tab. 10

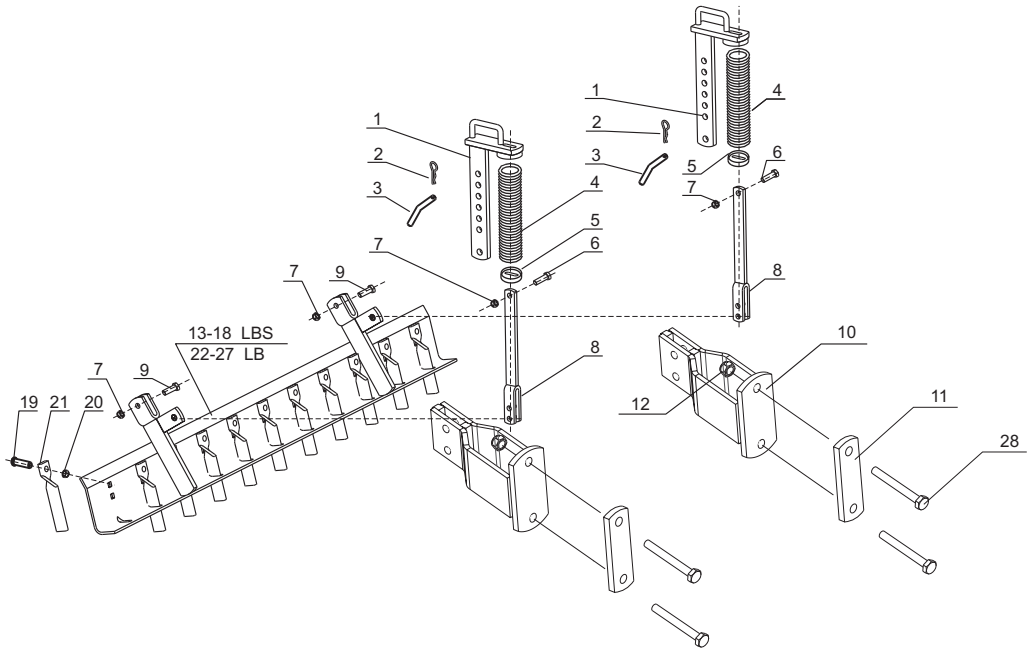

Leveling bars with spikes type: LBS-VM

For Cultivators type:

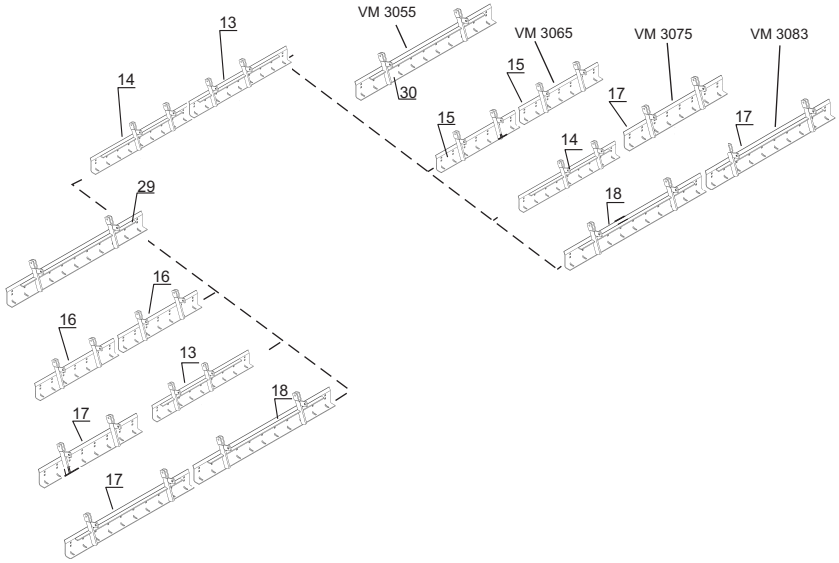

Leveling bars without spikes type: LB-VM

For Cultivators type:

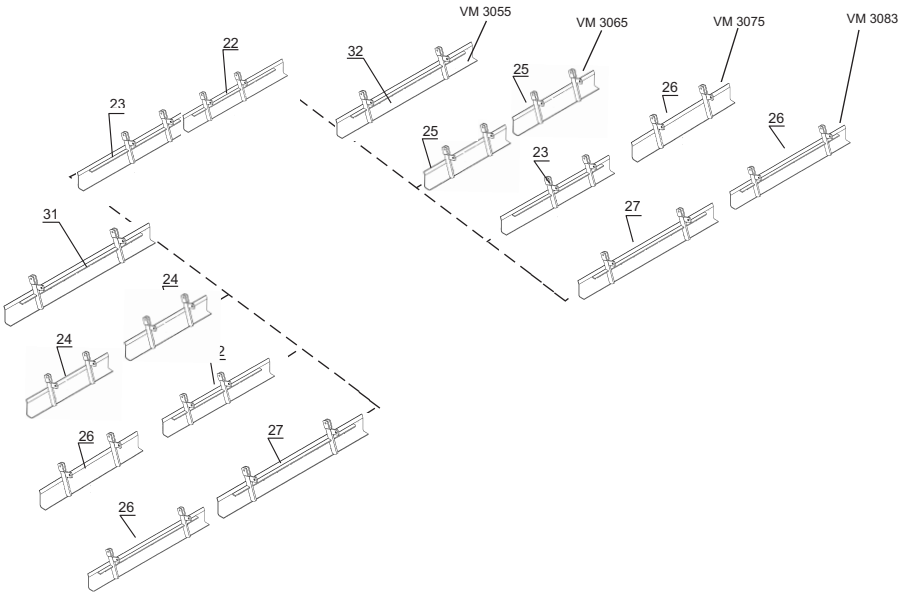

Tab. 10

Fig.	Serial no.	Part no.	Pieces	Notes		
1		310138100	2	Arm		
2		100333011	2	Split pin	4mm	
3		104000013	2	Pin		
4		310004215	Spring			
5		103040109	2	Waser		
6		300316021	2	Screw	M12x25	
7		300316021	4	Lock nut	M12	
8		104050009	2	Spring arm		
9		300304060	Screw	M12x50		
10		300222100	2	Bracket		
11		300004147	2	Plate		
12		300316023	4	Nut		
13		300224400	1	Levelboard LBS	Central frame	L=1234
14		300224300	2	Levelboard LBS	Central frame	L=1234
15		300224900	2	Levelboard LBS	Wing VM 3065	L=954
16		300225100	2	Levelboard LBS	Wing VM 3065	L=954
17		300268500	2	Levelboard LBS	Wing VM 3075/3083	L=1234
18		300264300	1	Levelboard LBS	Wing VM 3083	L=1514
19		100311035	1	Bolt	M12x35	DIN 933
20		300315003	1	Nut	M12	DIN 934
21		104100000	1	Tine		
22		300226300	1	Levelboard LB	Central frame	L=1234
23		300225700	1	Levelboard LB	Central frame	L=1234
24		300244900	2	Levelboard LB	Wing VM 3065	L=954
25		300225800	2	Levelboard LB	Wing VM 3065	L=954
26		300269100	2	Levelboard LB	Wing VM 3075/3083	L=1234
27		300226200	2	Levelboard LB	Wing VM 3083	L=1514
28		300304078	4	Bolt	M16x110	DIN 931
29		330020329	1	Levelboard LBS left	Wing VM 3055	L=1514
30		330020328	1	Levelboard LBS right	Wing VM 3055	L=1514

Tab. 11

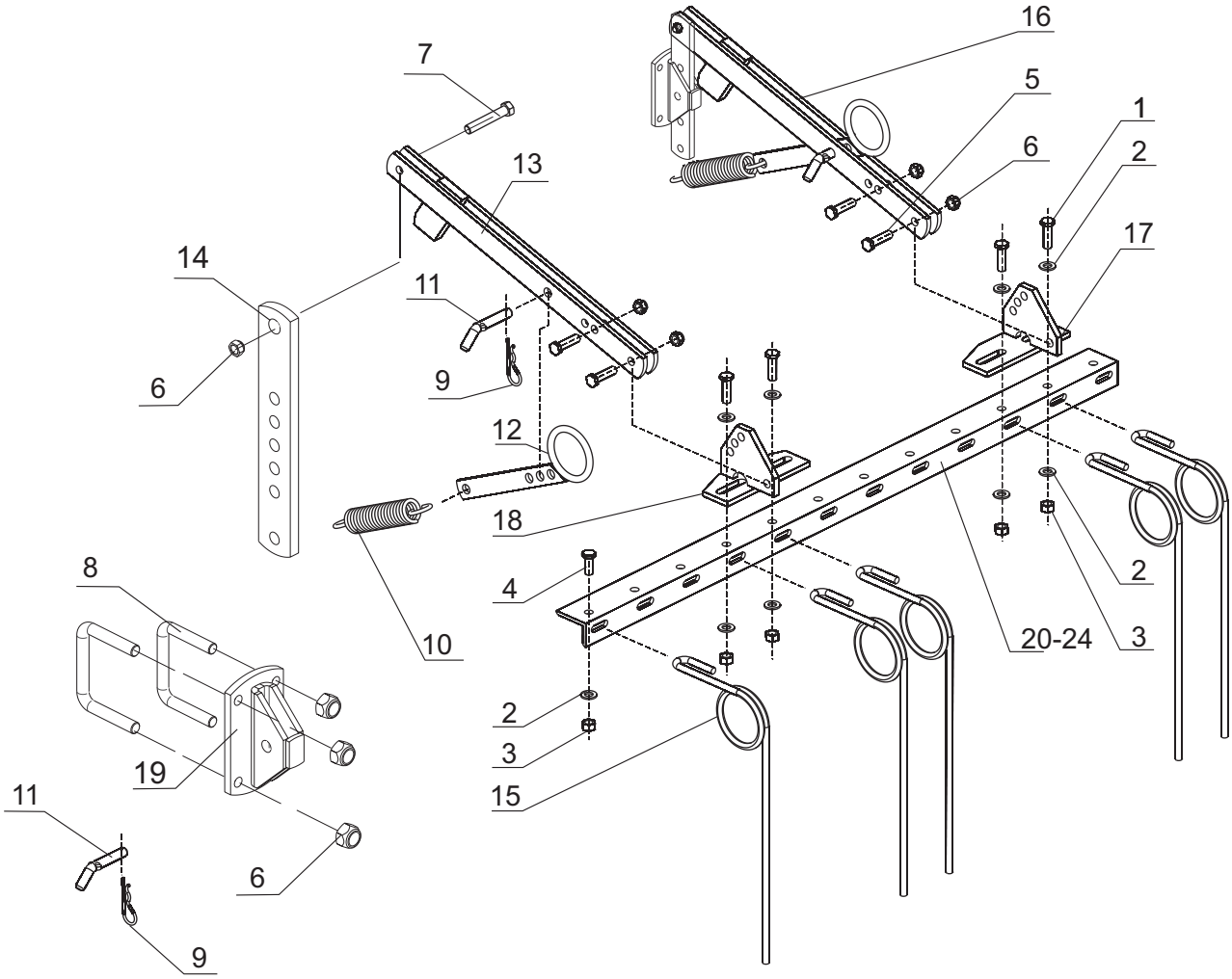

Long finger harrow type: FL-VM

For Cultivators type:

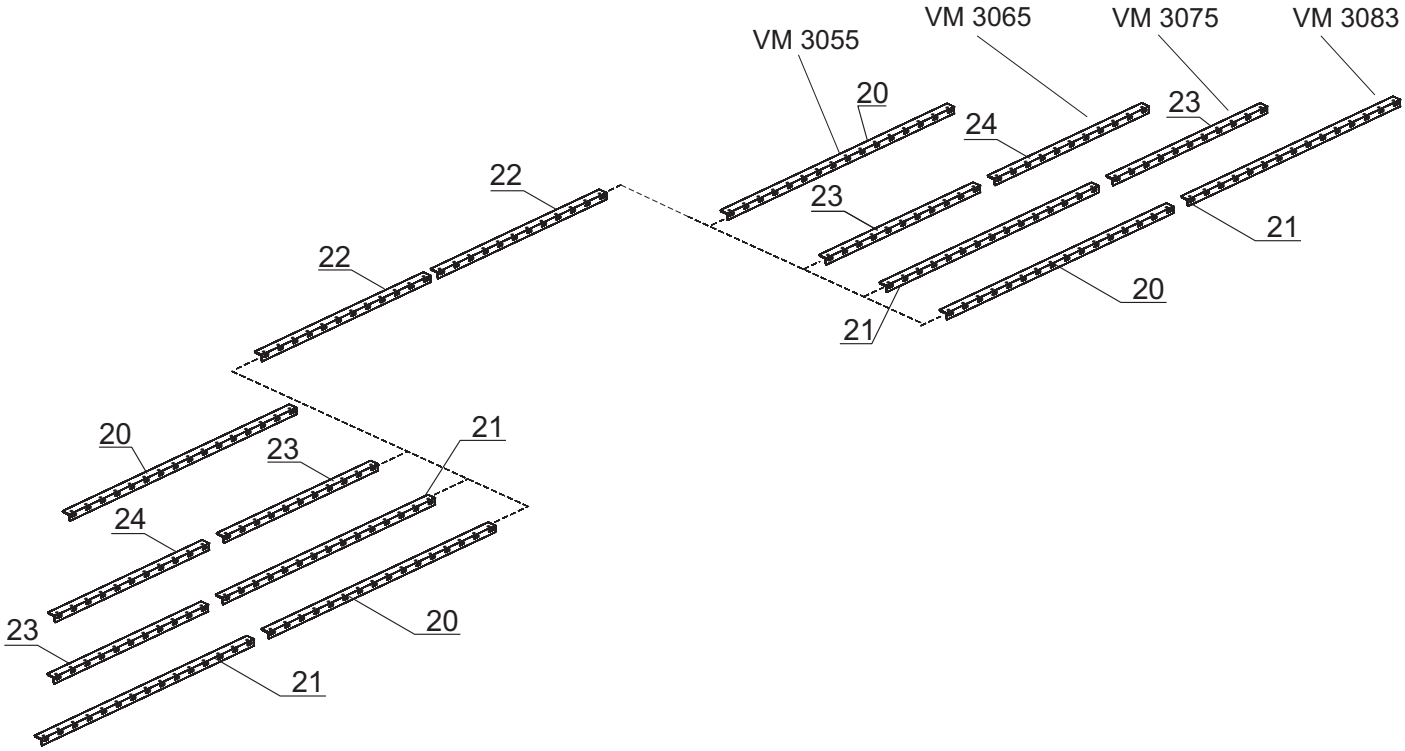

Tab. 11

Fig.	Serial no.	Part no.	Pieces	Notes	
1		300304058	4	Screw	M12x40mm
2		7000546212		Washer	M12
3		300315003		Nut	M12
4		300304056		Screw	M12x30mm
5		300304048	4	Screw	M12x45mm
6		300316021	2	Lock nut	M12
7		300304059	2	Screw	M12x45
8		300004566	4	U-bolt	
9		100333011	2	Hair pin clip 4 mm	
10		103120019	2	Spring	
11		104000013	2	Pin	
12		310188400	2	Handle	
13		103120002	2	Arm	
14		103120009	2	Flat bar	
15		102200065		Long finger	
16		300215400	2	Arm cpl.	
17		102247033	1	Bracket RH	
18		102247032	1	Bracket LH	
19		300226700	2	Holder	
20		102200026	2	Beam L=1560mm	
21		102200025	2	Beam L=1460mm	
22		310003630	2	Beam L=1160mm	
23		310003701	2	Beam L=1060mm	
24		102247051	2	Beam L=960mm	

Tab. 12

Manual wing lock system

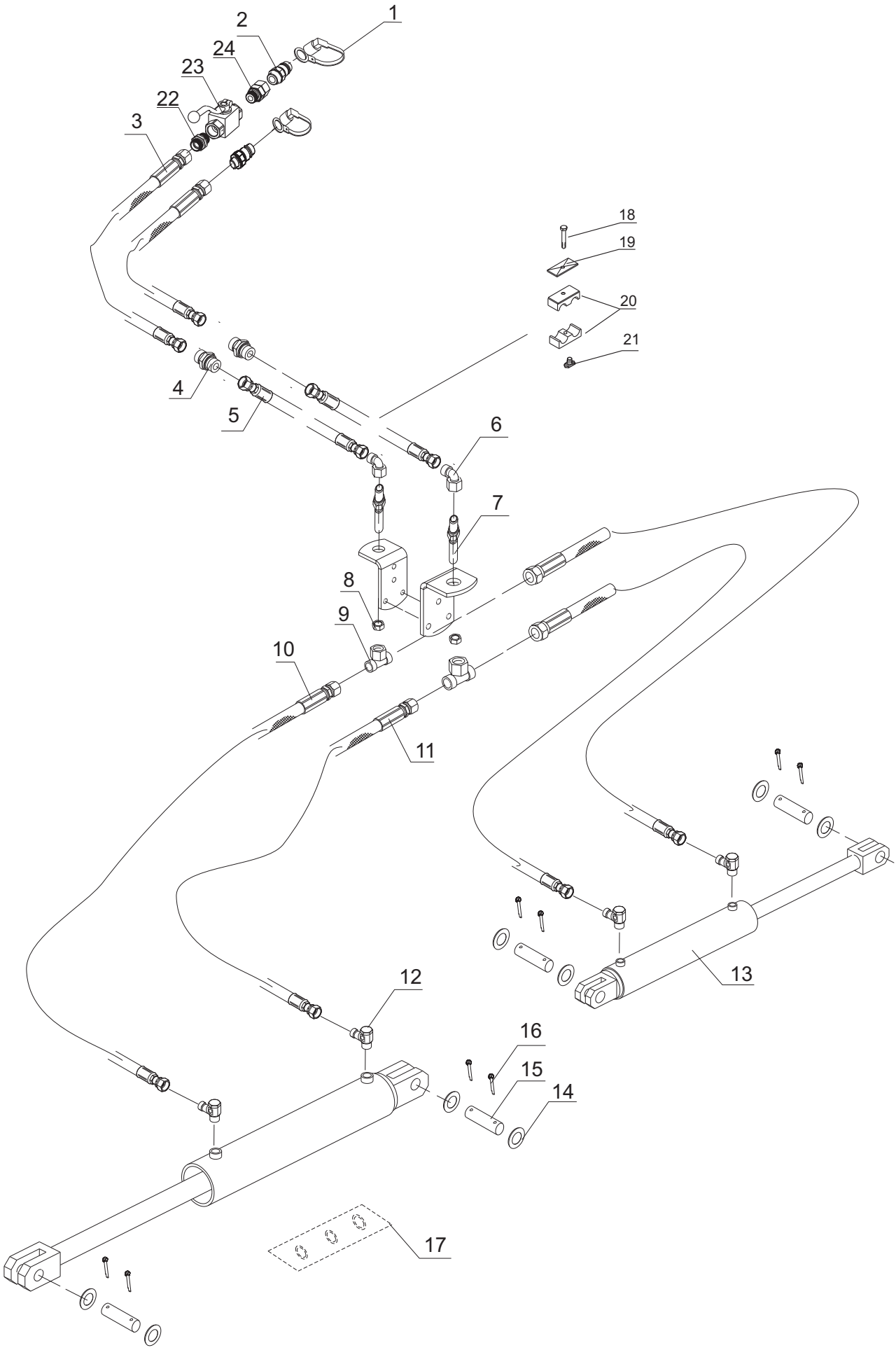

Tab.12

Fig.	Serial no.	Part no.	Pieces	Notes		
1		7000600399	2	Dust cap f.male		
2		7210000125	2	Quickcoupling male		
3		7210000134	2	Hydr. Hose	PHD AOL 2100mm	
4		71202079364	2	Nipple	M18x1.5 x M18x1.5	
5		300323069	2	Hydr hose	PHD AOL 1700mm	
6		300000867	2	Hydr. Coulping - L	XVEWO NW 10 HL	
7		310004092	2	Coulping	M18x1,5 L	
8		310004091	2	Nut	M18x1.5 S/L	
9		300037400	2	Hydr. Coulping T	M18x15	
10		372003460	2	Hydr hose	PHD AOL 1500mm	
11		7210000123	2	Hydr hose	PHD AOL 1000mm	
12		7000405785	4	Elbow	M18x1,5x(3/8”)	
13		300007748	2	Hydr. cylinder		
14		300332037	2	Washer	M30	DIN 126
15		71918846200	4	Pin	30x114	
16		100333031	4	Split pin	10x56	DIN 94
17		300007749	1	Sealing kit for cylinder	300221100	
18		300304157	6	Bolt	M8x35	DIN 933
19		7009603626	6	Top plate		
20		7210000111	12	Holder	RBPR-218	
21		7210000109	3	Nut spec.	SRS SMD M8	
22		71202079060	1	Connector		
23		500257617	1	Valve		
24		7210000128	1	Connector		

Tab. 13

Automatic wing lock system

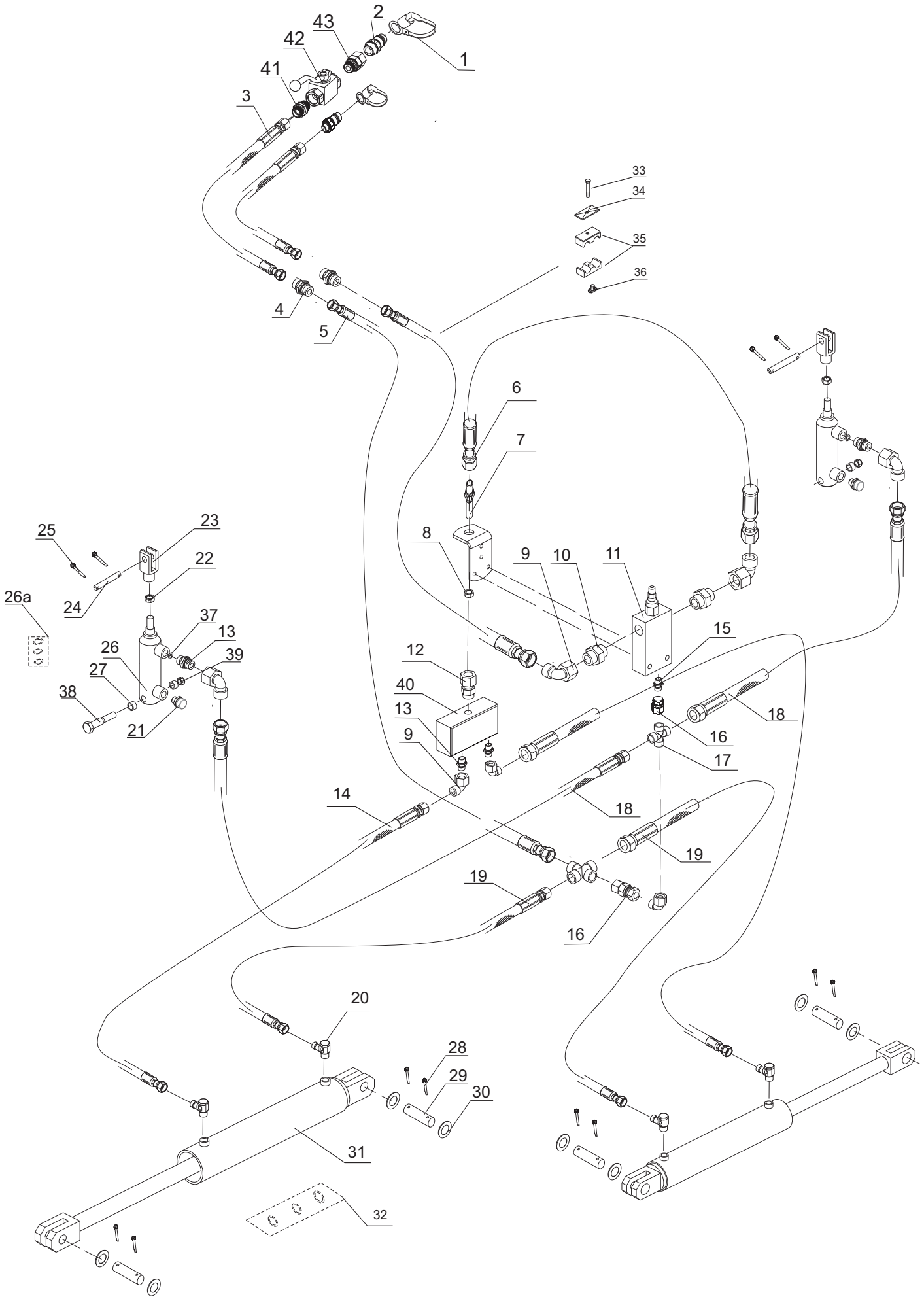

Tab. 13

Fig.	Serial no.	Part no.	Pieces	Notes		
1		7000600399	2	Dust cap f.male	1/2" RED	
2		7210000125	2	Quick coupling	XFV NW 10 HL	
3		7210000134	2	Hydr. Hose	PHD AOL 2100mm	
4		71202079364	2	Nipple	M181.5 x M18x1.5	
5		300323069	2	Hydr hose	PHD AOL 1700mm	
6		372005144	1	Hydr hose	PHD AOL 300mm	
7		310004092	1	Coulping	M18x1,5 L	
8		310004091	2	Nut	M18x1.5 S/L	
9		300000867	4	Hydr. Coulping L	M18x15	
10		372004192	2	Hydr. Coulping	1/2"- M18x1.5	
11		372004999	1	VALVE	VBCD 1/2" SE 3 VIE	
12		721000128	1	Coulping	AVR NW 10 LED	
13		71202079060	2	Nipple	M18x1.5 - 3/8”	
14		372003460	2	Hydr hose	PHD AOL 1500mm	
15		372004193	1	Nipple	M18x1.5 - 1/4”	
16		71202079361	2	Coulping	DMO NW 10 HL	
17		372005113	2	Coulping	TN 101 12L	
18		7210000103	2	Hydr hose	PHD AOL 750mm	
19		7210000123	2	Hydr hose	PHD AOL1000mm	
20		7000405785	4	Elbow	TN 111GG	
21		301044215	2	Breather		
22		71307212025	2	Nut	M12	DIN 936
23		371002527	2	Fork 12x24	M12	DIN 71752
24		101200660	2	Pin	12x44	
25		300333058	4	Split pin	4x25	DIN 94
26		301044021	2	Hydraulic cylinder	71625/50	
26a		301044022	1	Sealing kit for cylinder	371002529 (71625/50)	
27		300064404	4	Bushes		
28		100333031	8	Split pin	10x56	DIN 94
29		71918846200	4	Pin	30x114	
30		300332037	8	washer	M30	DIN 126
31		300007748	2	Hydraulic cylinder		
32		300007749	1	Sealing kit for cylinder	300221100	
33		300304157	6	Bolt	M8x35	DIN 933
34		7009603626	6	Top plate		
35		7210000111	12	Holder	RBPR-218	
36		7210000109	3	Nut spec.	SRS SMD M8	
37		372005045	2	Seal 10x14x1	Cu 10410	
38		300304051	2	Bolt	M12x100	DIN 931
39		300316021	2	Nut	M12	DIN 985
40		7210000135	1	Divider valve	VDFR	
41		71202079060	1	Connector		
42		500257617	1	Valve		
43		7210000128	1	Connector		

Tab. 14

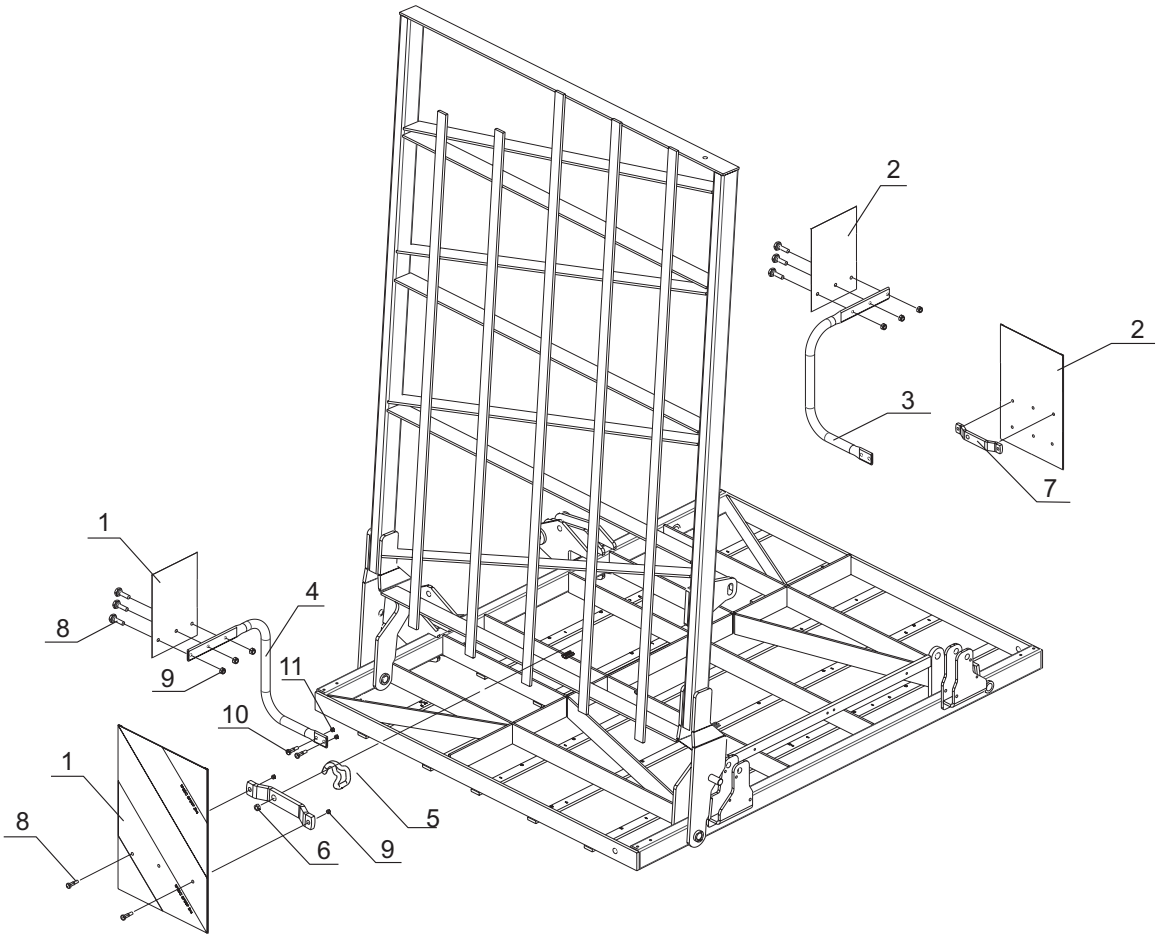
2
2
3
7
1
4
8
9
11
10
1
8
5
6
9

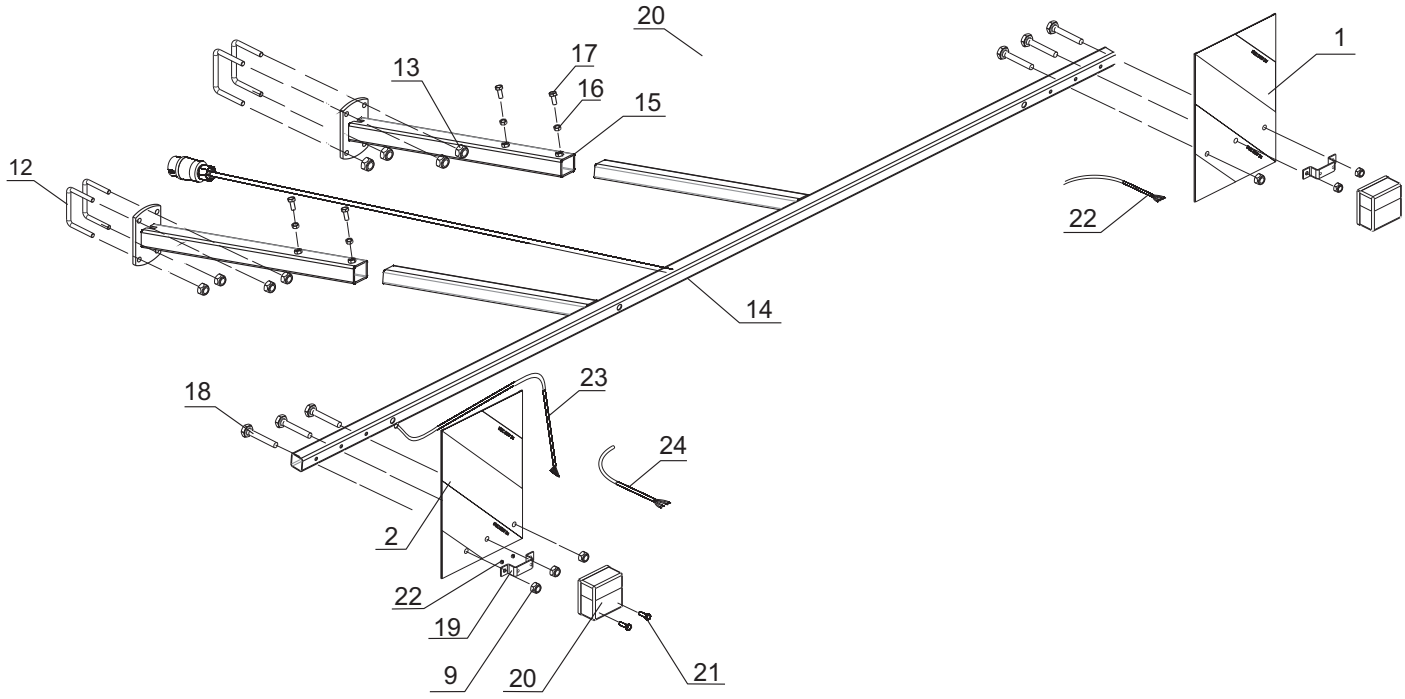
20
1
17
13
16
15
12
22
14
23
18
24
2
22
19
9
20
21

Tab. 14

Fig.	Serial no.	Part no.	Pieces	Notes		
1		300167800	3	Right light plate		
2		300167700	3	Left light plate		
3		300005344	1	Tube right front light plate		
4		300005343	1	Tube left front light plate		
5		101000507	2	Tine clamp		
6		300315003	2	Nut	M12	DIN 934
7		300005342	2	Side bracket light plate		
8		300304153	6	Bolt	M8x20	DIN 933
9		300316027	16	Nut	M8	DIN 985
10		300304035	4	Bolt	M10x35	DIN 933
11		300316020	4	Nut	M10	DIN 985
12		300004566	4	U-bolt	M12	
13		300316021	8	Nut	M12	DIN 985
14		300299400	1	Rear holder		
15		300295500	2	Bracket		
16		300315001	4	Nut	M10	DIN 934
17		300304034	4	Bolt	M10x30	DIN 933
18		300304161	6	Bolt	M8x55	DIN 933
19		300004569	2	Bracket rear reflector		
20		7000603318	2	Rear reflector		
21		300304131	4	Bolt		DIN 933
22		300316025	4	Nut		DIN 985
23		300269900	1	Electric wire cpl.7x0,75 kpl.L=6,5m		
24		300006069	1	Electric wire 4x0,75 L=3,2m		

Tab. 15

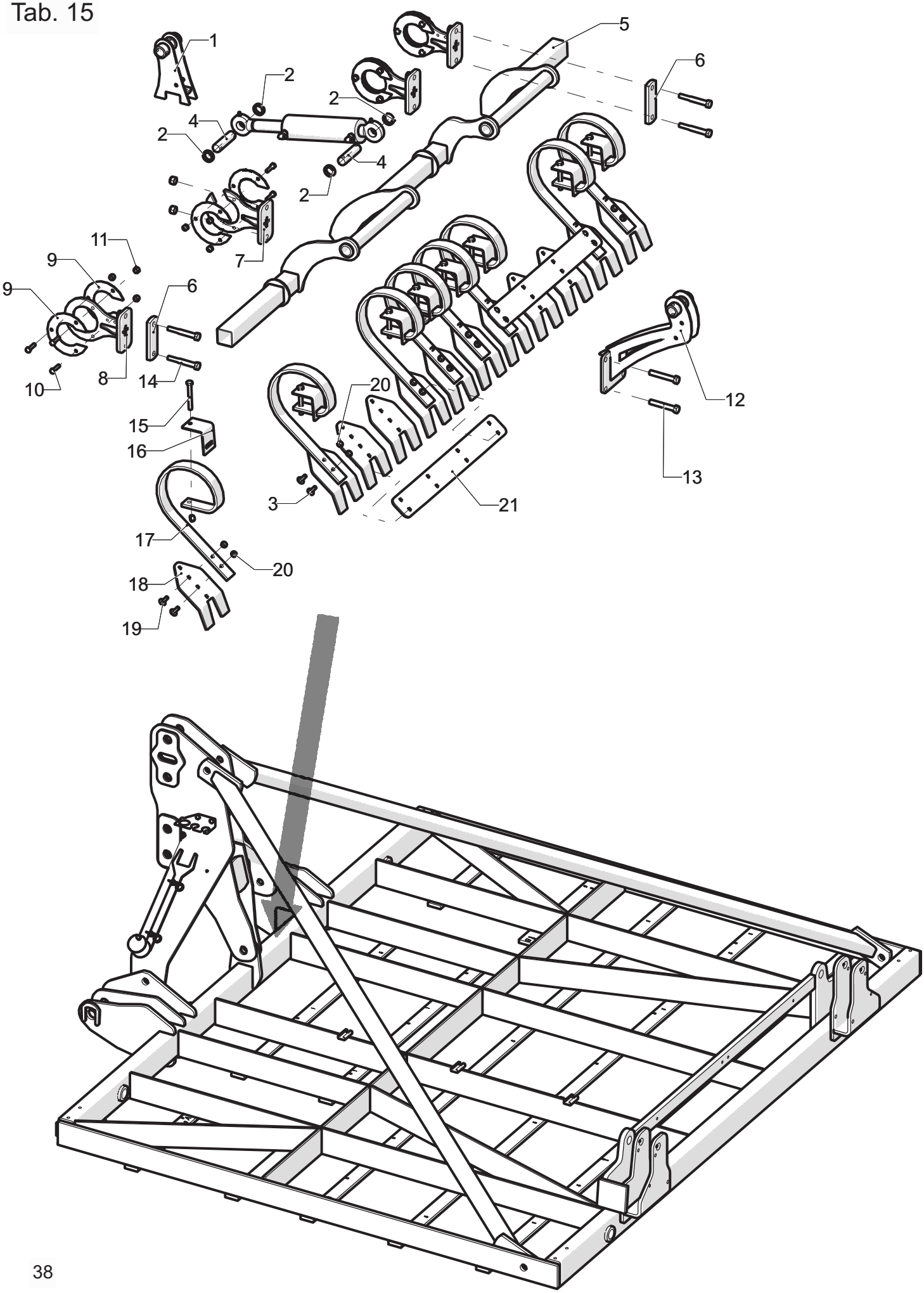

Tab.15

Fig.	Serial no.	Part no.	Quantity	Description
1		330020282		Cylinder holder-beam
2		373006243		Bushing D40x4,5 L=8
3		200209165		Sruba pods M10x40 8.8 FZB DIN603
4		301010008		Section pin L=170mm
5		330020259		Central frame FLB beam
6		300004147		Plate
7		330020232		Open holder
8		330020231		Closed holder
9		301018140		Plate - FLB holder
10		300304036		Bolt M10x40 cl. 8.8 DIN931
11		300316020		Lock nut M10 DIN985
12		330020281		Cylinder holder central frame and wings
13		300304079		Bolt M16x120 8.8 FZB DIN931
14		300304078		BOLT M16X110 8,8 8.8
15		300304051		Bolt M12x100 8.8 FZB DIN 931
16		101155311		CLAMP B=60x60-T=45x11 SILVER
17		101000940		VIBRO LEVEL TINE 45X11
18		301018118		Working plate - FLB
19		300304165		CARRIAGE BOLT M10X30 Fe/Zn9
20		300315001		Nut M10 cl.8 FZB DIN934
21		330020299		Connecting plate

Tab. 16

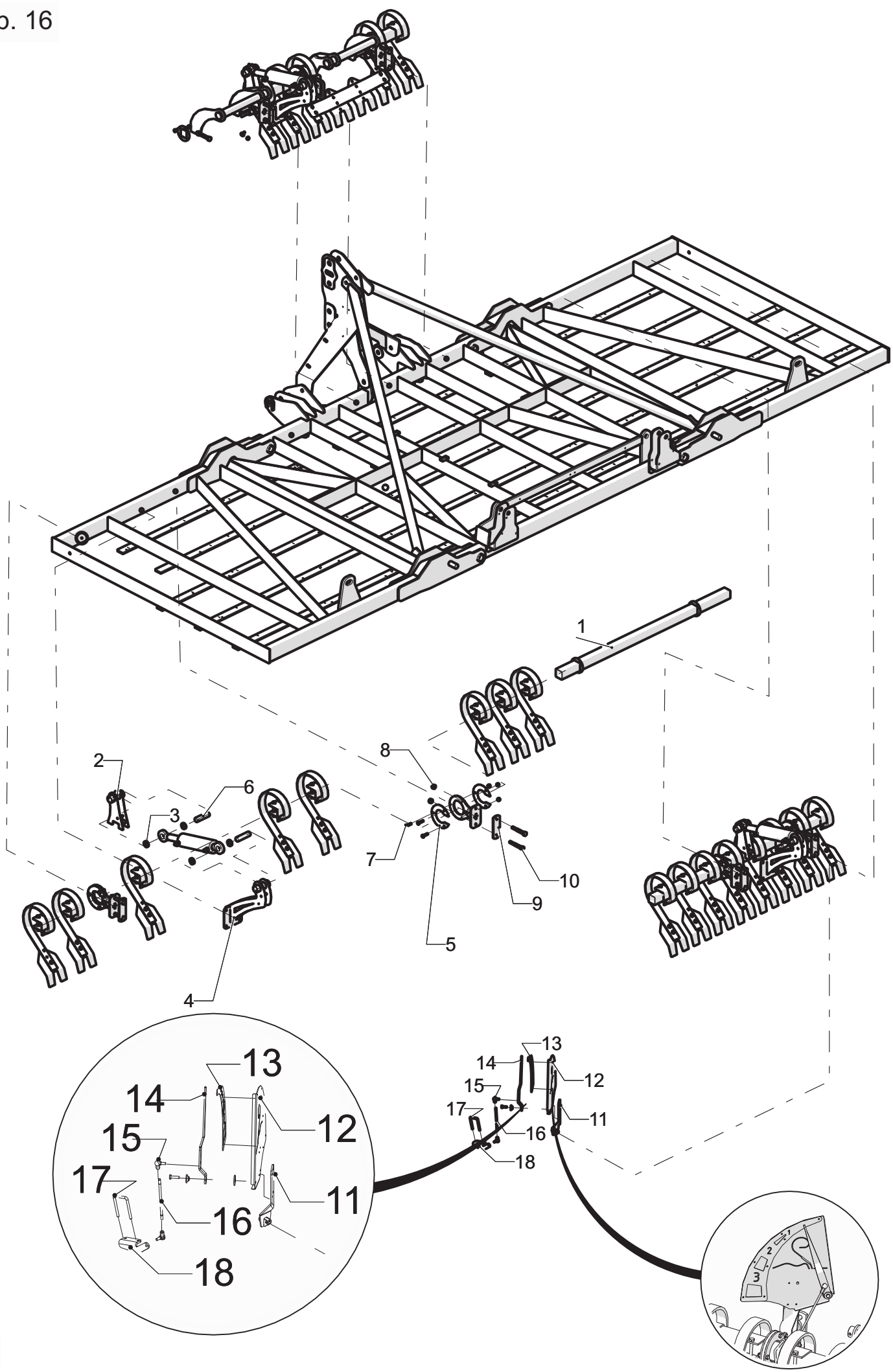

Tab.16

Fig.	Serial no.	Part no.	Quantity	Description
1	VM 3055	330020237	2	Tube FLB VM 3055 welded
1	VM 3065	330020223	2	Tube FLB wing VM3065 welded
1	VM 3075	330020225	2	Tube FLB wing VM 3075 welded
1	VM 3083	330020219	2	Tube FLB wing VM 3083 welded
2		330020282		Cylinder holder-beam
3		373006243		Bushing D40x4,5 L=8
4		330020281		Cylinder holder central frame and wings
5		301018140		Plate - FLB holder
6		301010008		Section pin L=170mm
7		300304036		Bolt M10x40 cl. 8.8 DIN931
8		300316020		Lock nut M10 DIN985
9		300004147		Plate
10		300304078		BOLT M16X110 8,8 8.8
11		330020307		Main plate
12		301018124		Support fol scale
13		301018125		Scale
14		330020316		Indicator
15		301018121		Joint M8
16		330020317		ROD
17		71000105501		U-bolt for tube 60x60
18		301018119		Arm

Tab. 17

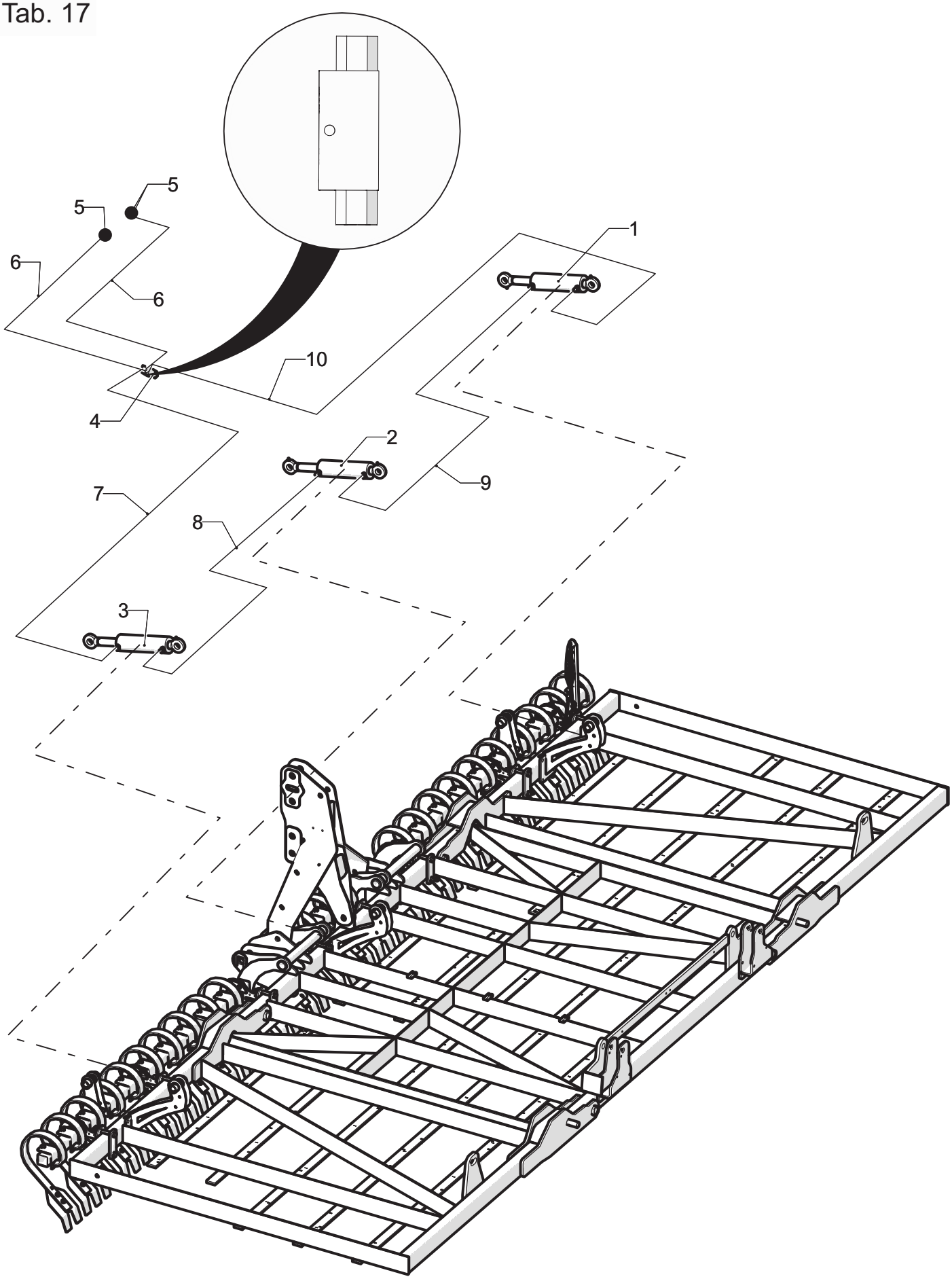

Tab.17

Fig.	Serial no.	Part no.	Quantity	Description
1		301044005		Hydraulic cylinder FLB 75/40-140
2		301044003		Hydraulic cylinder FLB 63/30-140
3		301044001		Hydraulic cylinder FLB 55/30-140
4		330190037		Double piloted checked valve VBPDE 3/8" L (V0020)
5		7210000125		Quick coupling XFV NW 10 HL
6		330120053		Hydraulic hose 1/4" M14x1,5-90°-N / M14x1,5-90°-N L=2900
7		330120055		Hydraulic hose 1/4" M14x1,5-90°-N / M14x1,5-90°-N L=2900
8		330120054		Hydraulic hose 1/4" M14x1,5-90°-N / M14x1,5-90°-N L=2400
9		330120037		Hydraulic hose 1/4" M14x1,5-0°-N / M14x1,5-90°-N L=2900
10		330120054		Hydraulic hose 1/4" M14x1,5-90°-N / M14x1, L=2400

Valid from: I Gültig ab:
Valable á partir de: I Gyldig fra:
21. 02. 2017

Serial No.: I Maschinen Nr.:
No. de serie: I Fabrikationsnr.:
A12-2099-40170001

VM 3000