KONGSKILDE
Moving agriculture ahead

HK31

Reservedelsliste
Spare parts list
Ersatzteilliste
Onderdelenlijst
Liste de piece de rechange
Catalogul de piese de schimb
Katalog części zamiennych

Valid from serial number / Gültig ab Seriennummer / Valable á partir de numéro de série / Gyldig fra serienummer:

Serial number / Seriennummer / Numéro de série / Serienummer: A13-0220-40181026

Tab.1

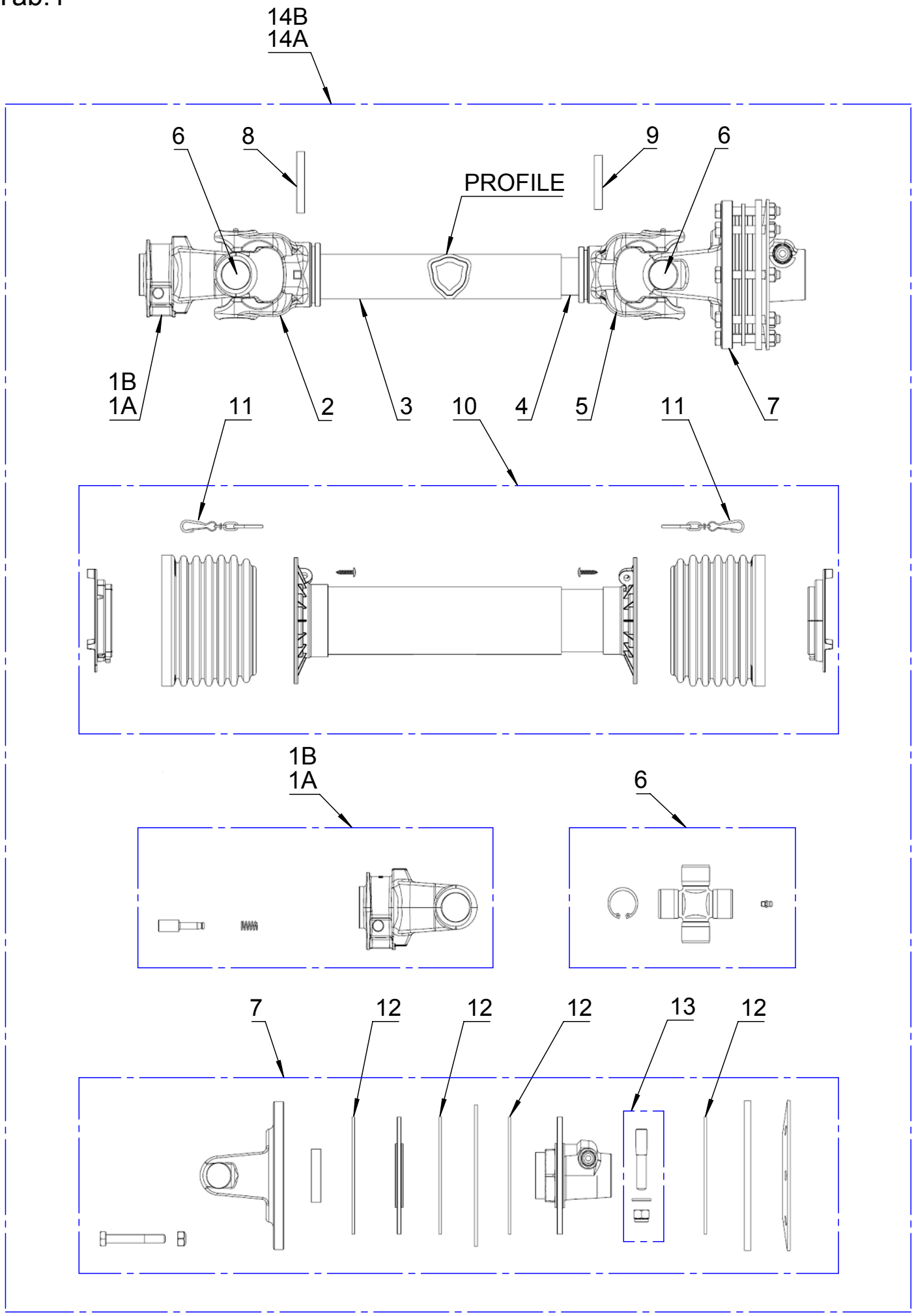

PTO SHAFT - BONDIOLI & PAVESI

Tab.1 Date: 07.02.2018

Fig.	Part no.	Quantity	Description
1A	73204051450	1	YOKE 1 3/8"-6
1B	71204051460	1	YOKE 1 3/8"-21
2	71204051530	1	YOKE
3	71204054777	1	PROFILED TUBE
4	71204054778	1	PROFILED TUBE
5	71204051540	1	YOKE
6	74000003275	2	SPIDER ASSY
7	71204056754	1	CLUTCH ASSY
8	71208089370	1	TENSION PIN 10x75
9	71208089240	1	TENSION PIN 10x65
10	71204055883	1	GUARD
11	71204055004	2	CHAIN
12	71204056961	1	FRICTION CLUTCH DISC 141x77x3,2
13	71204056757	4	TAPER PIN 16x64xM14
14A	71204057191	1	PTO SHAFT ASSY 1 3/8"-6
14B	71204057198	1	PTO SHAFT ASSY 1 3/8"-21

Tab.2

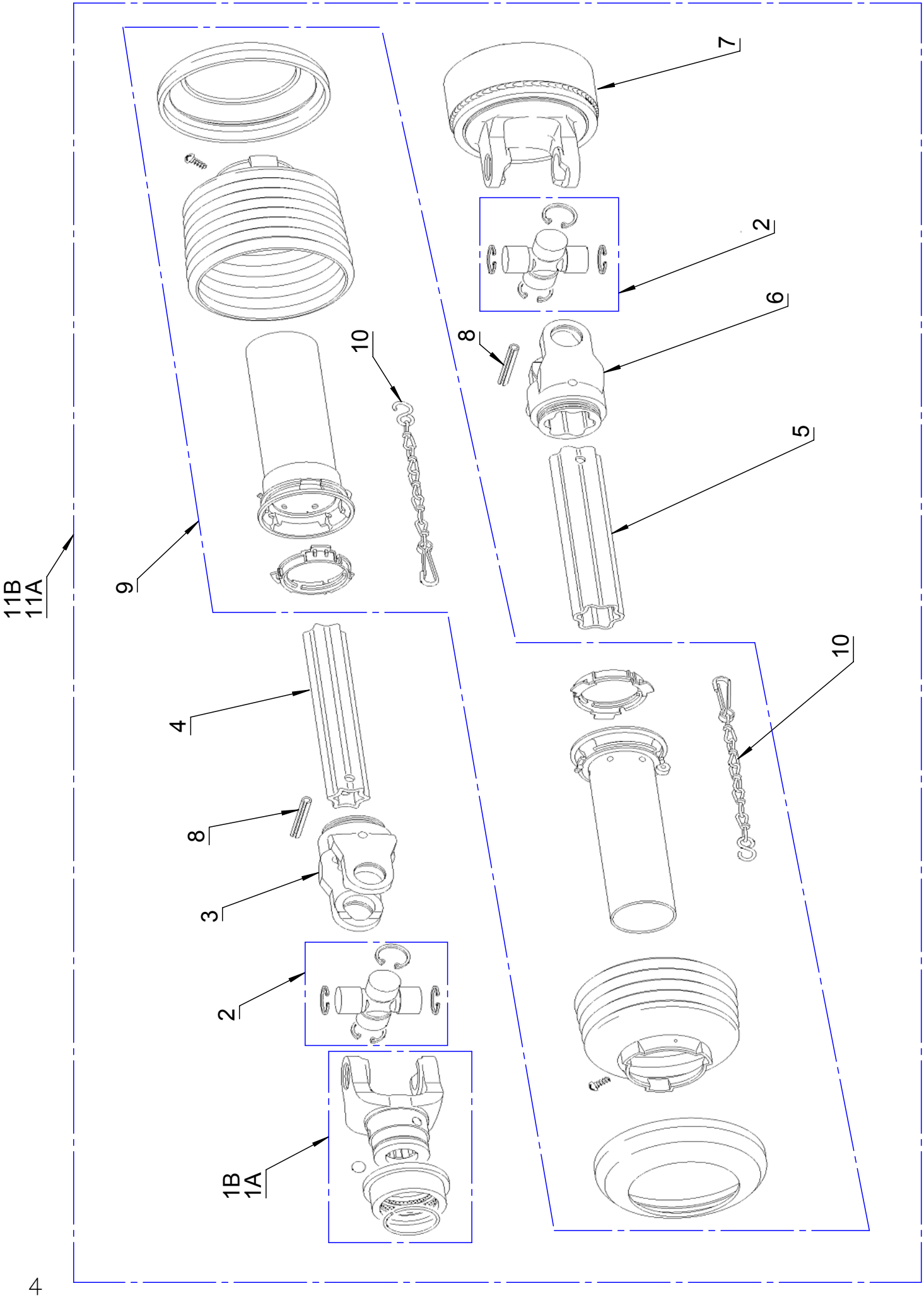

PTO SHAFT - WALTERSCHEID

Tab.2 Date: 07.02.2018

Fig.	Part no.	Quantity	Description
1A	71204047810	1	YOKE 1 3/8"-6
1B	71204047880	1	YOKE 1 3/8"-21
2	71204046920	2	SPIDER ASSY
3	71204047860	1	YOKE
4	71204068000	1	PROFILED TUBE
5	71204064260	1	PROFILED TUBE
6	71204047870	1	YOKE
7	71204066246	1	CLUTCH ASSY
8	71208089975	2	TENSION PIN 10x90
9	71204060140	1	GUARD
10	71204046880	2	CHAIN
11A	71204007982	1	PTO SHAFT ASSY 1 3/8"-6
11B	73204007984	1	PTO SHAFT ASSY 1 3/8"-21

Tab.3

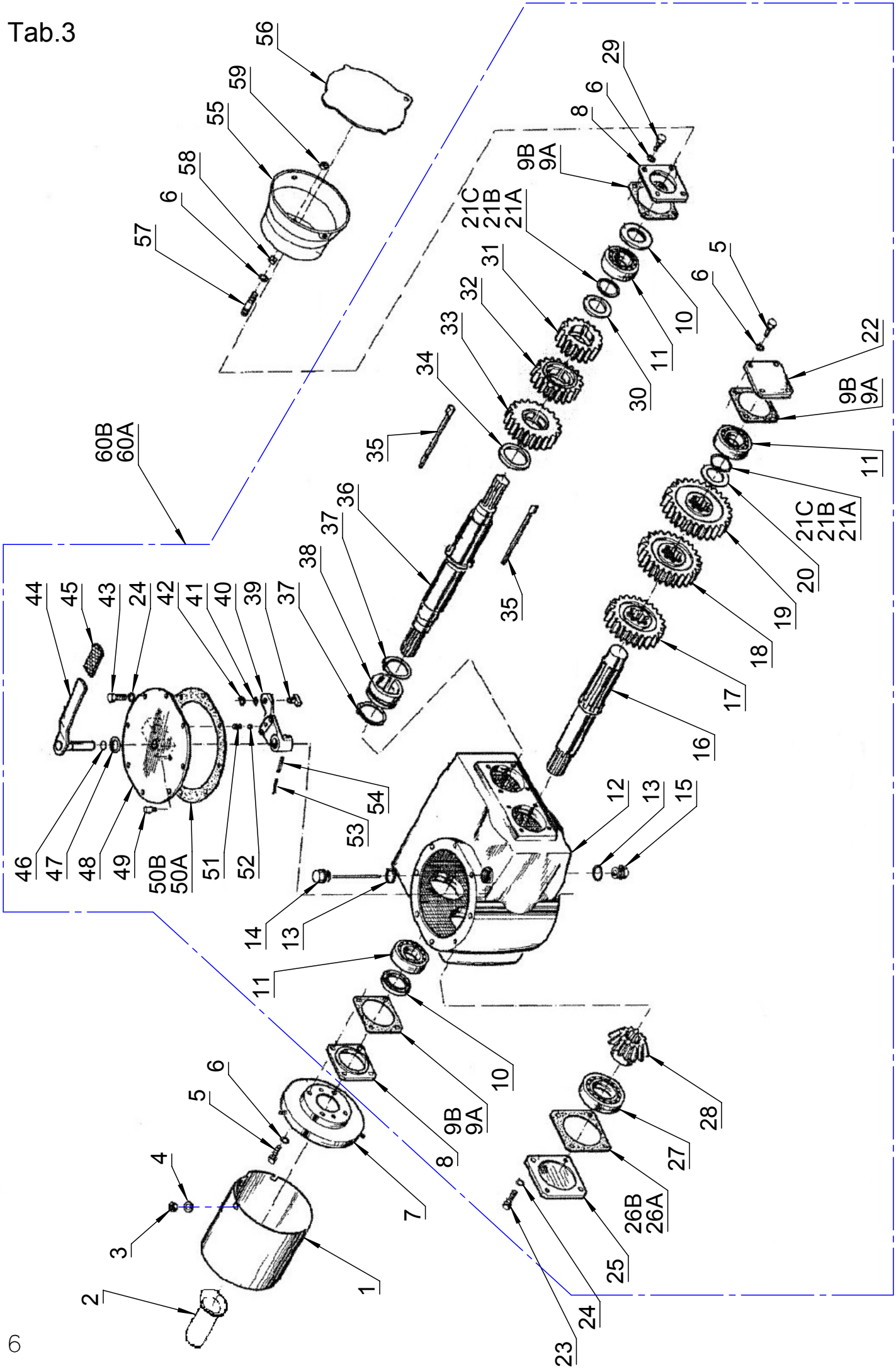
56
59
55
58
6
57
29
6
8
9B
9A
21C
21B
21A
31
32
33
34
35
36
37
38
10
11
30
5
22
9B
9A
11
21C
21B
21A
20
19
18
17
16
35
60B
60A
44
45
43
24
42
41
40
39
37
46
47
48
49
50B
50A
51
52
53
54
12
13
15
14
13
11
10
9B
9A
8
7
6
5
4
3
2
1
28
27
26B
26A
25
24
23

Tab.3 Date: 07.02.2018

Fig.	Part no.	Quantity						Description
		HK31-300 D STANDARD	HK31-300 D CARBIDE	HK31-350 D STANDARD	HK31-350 D CARBIDE	HK31-400 D STANDARD	HK31-400 D CARBIDE	
1	71000625804			1				PTO SHAFT COVER 1,5x205x683
2	71202040620			1				PLASTIC PLUG D45 72x117,5
3	300316027			1				SELF-LOCKING NUT M8 CL 8 FZB DIN985
4	71209019370			1				TAB WASHER
5	300304034			8				BOLT M10x30 CL 8.8 FZB DIN933
6	300332021			12				SPRING WASHER M10 FZB DIN127B
7	71000646315			1				COVER
8	71000647098			2				BEARING COVER 12x100x100
9A	71000647090			3				GASKET 1x100x100
9B	71000647091			3				GASKET 0,5x100x100
10	71267245082			2				OIL SEAL BASL 45x72x8
11	300402021			3				CONICAL BEARING 32209
12	71000182860			1				GEAR HOUSING
13	71203038340			2				SEALING RING A26x31 Cu
14	71000185374			1				PLUG WITH GAUGE M26x1,5
15	71203031360			1				PLUG M26x1,5
16	71000647083			1				INTERNAL SHAFT
17	71000647084			1				GEAR 23T
18	71000647085			1				GEAR 25T
19	71000647086			1				GEAR 27T
20	71000647087			1				RING 45,1x70x8
21A	71203081080			2				DISTANCE RING PS45x56x0,5 DIN988
21B	71203081090			2				DISTANCE RING PS45x56x0,2 DIN988
21C	71203081100			2				DISTANCE RING PS45x56x0,1 DIN988
22	71000647093			1				BEARING COVER BL 12x100x100
23	300304058			4				BOLT M12x40 CL 8.8 FZB DIN933
24	300332022			12				SPRING WASHER M12 FZB DIN127B
25	71000182594			1				BEARING COVER BL 12x130x130
26A	71000182595			1				GASKET 1x130x130
26B	71000182596			1				GASKET 0,5x130x130
27	300402008			1				CONICAL BEARING 30212
28	71000647082			1				BEVEL GEAR 13T
29	300304032			2				BOLT M10x25 CL 8.8 FZB DIN933
30	71000647282			1				RING 45,1x70x5
31	71000647106			1				GEAR 17T
32	71000647105			1				GEAR 19T
33	71000647104			1				GEAR 21T
34	71000647097			1				RING 82,5x14x8,5
35	71000184981			3				SPECJAL GROOVE
36	71000184823			1				DRIVE SHAFT 1 3/4"-6 / 1 3/8"-6
37	71208102400			2				CIRCLIP 60x2 DIN471
38	71000184980			1				SLEEVE SLIDING 88,9x22,2x34
39	71000647099			1				SLIDE
40	71000647100			1				ARM
41	300332027			1				WASHER M10 FZB DIN126
42	300407004			1				CIRCLIP 10x1 FZB DIN471
43	300304056			8				BOLT M12x30 CL 8.8 FZB DIN933
44	71000184164			1				LEVER
45	71209027220			1				PCV-HANDLE 34x8x100
46	71202070080			1				O-RING 17,3x2,4
47	300332067			1				WASHER M22 FZB DIN126
48	71000184975			1				COVER
49	71203032010			1				BREATHER R1/8
50A	71000182863			1				GASKET 1x250x270
50B	71000182864			1				GASKET 0,5x250x270
51	71208051770			1				PRESSURE SPRING 1,25x8x22 DIN2098
52	71250010001			1				STEEL BALL D10 CLASS V
53	71208089830			1				SPRING PIN HD 3,5x40 FZB DIN1481
54	300323031			1				SPRING PIN HD 6x40 FZB DIN1481

Tab.3

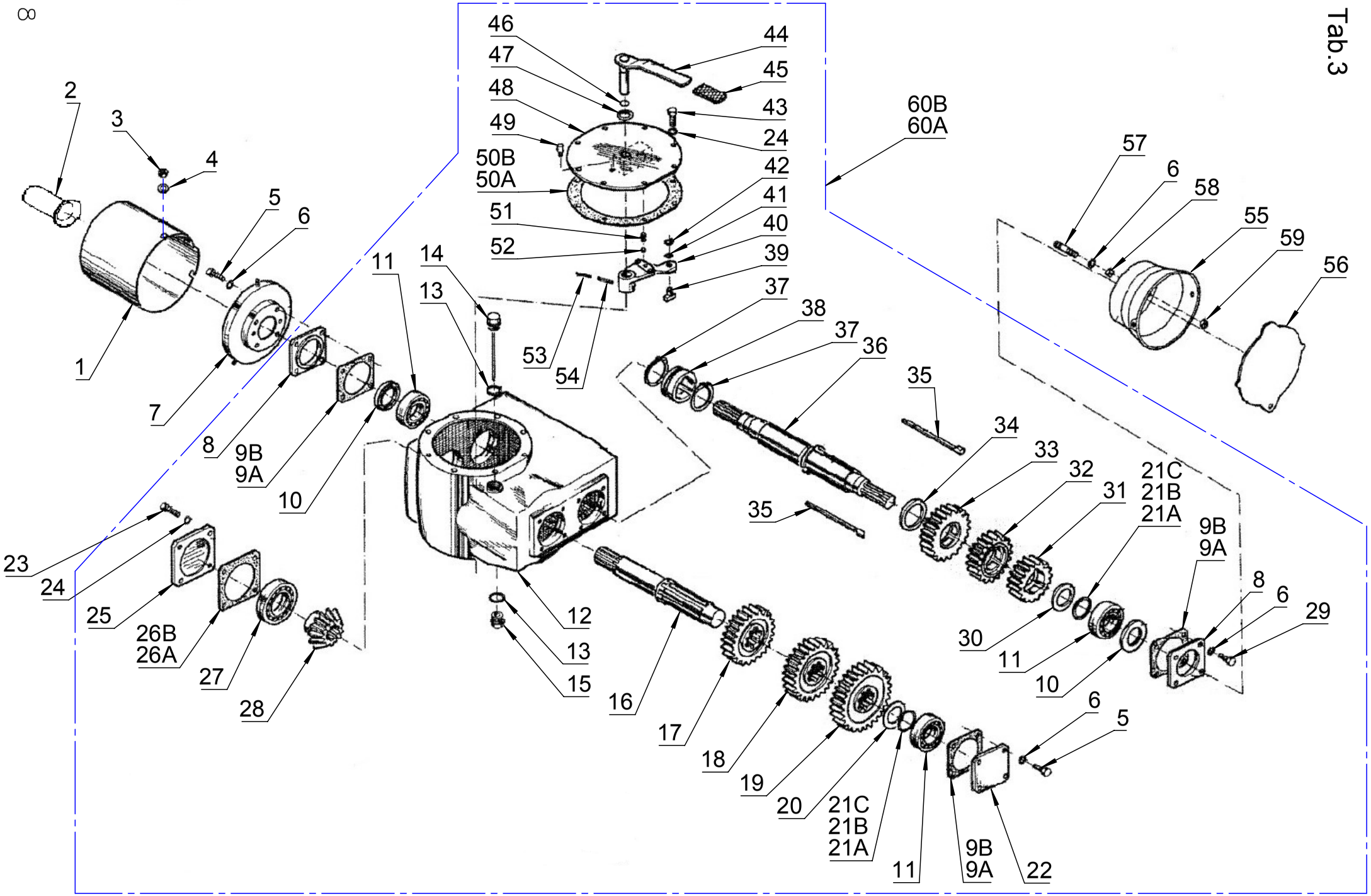
46
47
48
49
50B
50A
51
52
44
45
43
24
42
41
40
39
37
60B
60A
57
6
58
55
59
56
2
3
4
5
6
1
7
8
9B
9A
10
11
14
13
53
54
38
37
36
35
34
33
32
31
21C
21B
21A
9B
9A
8
6
29
30
11
10
23
24
25
26B
26A
27
28
12
13
15
16
17
18
19
20
21C
21B
21A
11
9B
9A
22
6
5

Tab.3 continuation Date: 07.02.2018

Fig.	Part no.	Quantity						Description
		HK31-300 D STANDARD	HK31-300 D CARBIDE	HK31-350 D STANDARD	HK31-350 D CARBIDE	HK31-400 D STANDARD	HK31-400 D CARBIDE	
55	71000182887	1						PTO SHAFT COVER
56	71000182953	1						PLUG
57	71326210355	2						STUD M10x35 CL 8.8 FZB DIN939
58	300315001	2						NUT M10 CL 8 FZB DIN934
59	300316020	2						SELF-LOCKING NUT M10 CL 8 FZB DIN985
60A	71918285601	1	1			1	1	GEARBOX D LH 1 3/4"-6 / 1 3/8"-6 - 1000RPM
60B	71918285602			1	1			GEARBOX D RH 1 3/4"-6 / 1 3/8"-6 - 1000RPM

Tab.4

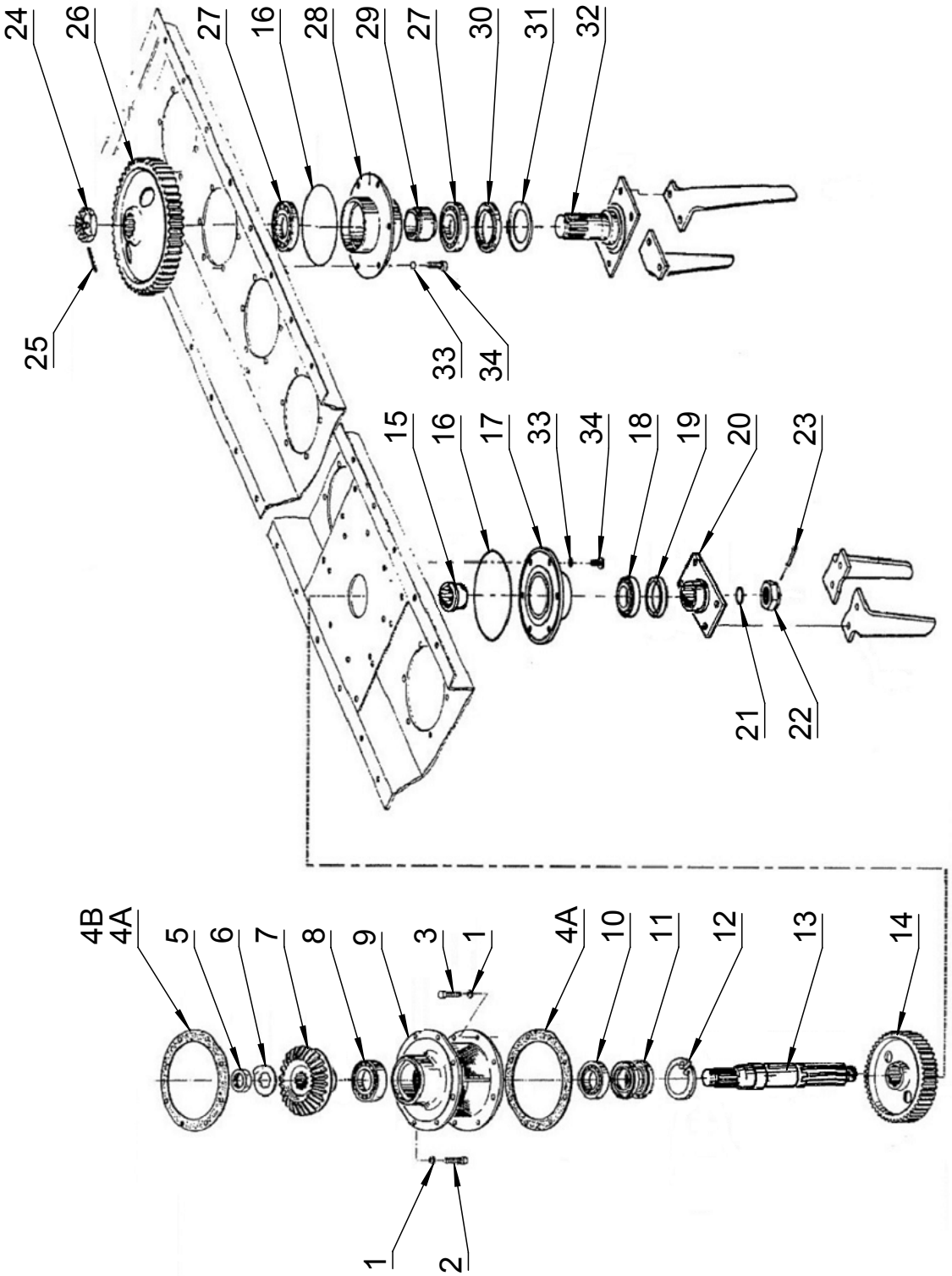
24
26
27
16
28
29
27
30
31
32
25
33
34
15
16
17
33
34
18
19
20
23
21
22
4B
4A
5
6
7
8
9
3
1
4A
10
11
12
13
14
1
2

ROTORS TRANSMISSION

Tab.4 Date: 07.02.2018

Fig.	Part no.	Quantity						Description
		HK31-300 D STANDARD	HK31-300 D CARBIDE	HK31-350 D STANDARD	HK31-350 D CARBIDE	HK31-400 D STANDARD	HK31-400 D CARBIDE	
1	300332022	16						SPRING WASHER M12 FZB DIN127B
2	300304057	8						BOLT M12x35 8.8 FZB DIN933
3	300304056	8						BOLT M12x30 8.8 FZB DIN933
4A	71000182863	2						GASKET 1x250x270
4B	71000182864	1						GASKET 0,5x250x270
5	71000182471	1						SPECIAL NUT M14x1,5
6	71000182470	1						LOCK WASHER 40,5x80x8
7	71000647184	1						BEVEL GEAR 30T
8	300402008	1						CONICAL BEARING 30212
9	71000185450	1						BEARING HOUSING
10	71255510231	1						CONICAL BEARING 30211
11	71261065101	2						OIL SEAL BA 65x100x10
12	71208101520	1						CIRCLIP 100x3 DIN472
13	71000186808	1						DRIVE SHAFT
14	71000182345	1						GEAR 49T
15	71000186798	1						DISTANCE SLEEVE 70x16x37
16	71202074020	12	12	14	14	16	16	O-RING 190x3 70-SH
17	71000186805	1						BEARING HOUSING
18	71256011221	1						BEARING 6212
19	71269575123	1						OIL SEAL BASL 75x95x12UE
20	71000186803	1						BLADE SUPPORT
21	71202070690	1						O-RING 45x5 NBR
22	71000186804	1						CROWN NUT M45x1,5 CL 8 FZB DIN935
23	300323036	1						SPRING PIN HD 8x60 FZB DIN1481
24	71307136140	11	11	13	13	15	15	CROWN NUT M36x1,5 CL 6 FZB DIN937
25	300323115	11	11	13	13	15	15	SPRING PIN 6x50 FZB DIN1481
26	71000182303	11	11	13	13	15	15	GEAR 49T
27	300402007	22	22	26	26	30	30	CONICAL BEARING 30210
28	71000185501	11	11	13	13	15	15	BEARING HOUSING
29	71000184857	11	11	13	13	15	15	SLEEVE 60x4,5x49
30	71269065102	11	11	13	13	15	15	OIL SEAL BASL 65x90x10
31	71000180384	11	11	13	13	15	15	RING 90,15x66
32	71000185503	11	11	13	13	15	15	ROTOR
33	71202074750	72	72	84	84	96	96	O-RING 12x2
34	71367412300	72	72	84	84	96	96	FLANGE BOLT M12x30 CL 10.9 TENSILOCK

Tab.5

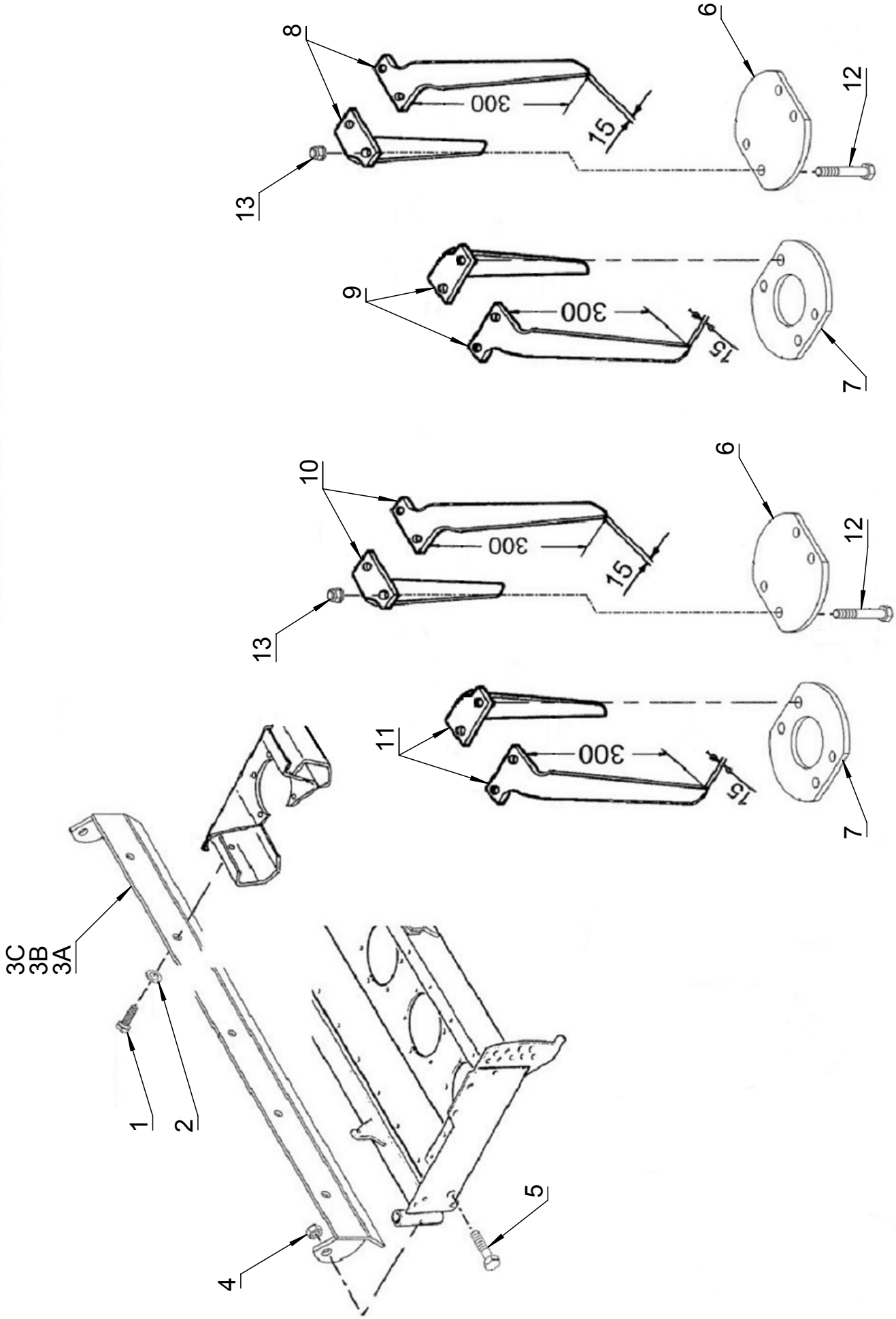

GUARD FROM STONE, BLADES, FLANGES

Tab.5 Date: 07.02.2018

Fig.	Part no.	HK31-300 D STANDARD	HK31-300 D CARBIDE	HK31-350 D STANDARD	HK31-350 D CARBIDE	HK31-400 D STANDARD	HK31-400 D CARBIDE	Description
1	300304081	12	12	14	14	16	16	BOLT M16x35 CL 8.8 FZB DIN933
2	71209019340	12	12	14	14	16	16	FIXATION WASHER 16,4x32,5x2,5
3A	71000187729	1	1					GUARD FROM STONE 3.0m
3B	71000187730			1	1			GUARD FROM STONE 3.5m
3C	71000187731					1	1	GUARD FROM STONE 4.0m
4	300316016	2						SELF-LOCKING NUT M20 CL 8 FZB DIN985
5	300304117	2						BOLT M20x70 CL 8.8 FZB DIN931
6	71000185507	11	11	13	13	15	15	REINFORCEMENT FLANGE 10x160x194, D=16
7	71000185508	1	1	1	1	1	1	REINFORCEMENT FLANGE 10x160x194, D=16
8	71000185505	12		14		16		BLADE LH 300x15
9	71000185506	12		14		16		BLADE RH 300x15
10	73000185505CV		12		14		16	BLADE LH 300x15 CARBIDE
11	73000185506CV		12		14		16	BLADE RH 300x15 CARBIDE
12	71000185509	48	48	56	56	64	64	BOLT M16x1,5x70 CL 12.9 DACROMET DIN960
13	71000185514	48	48	56	56	64	64	NUT M16x1,5 CL 10 FZB DIN6926

Tab.6

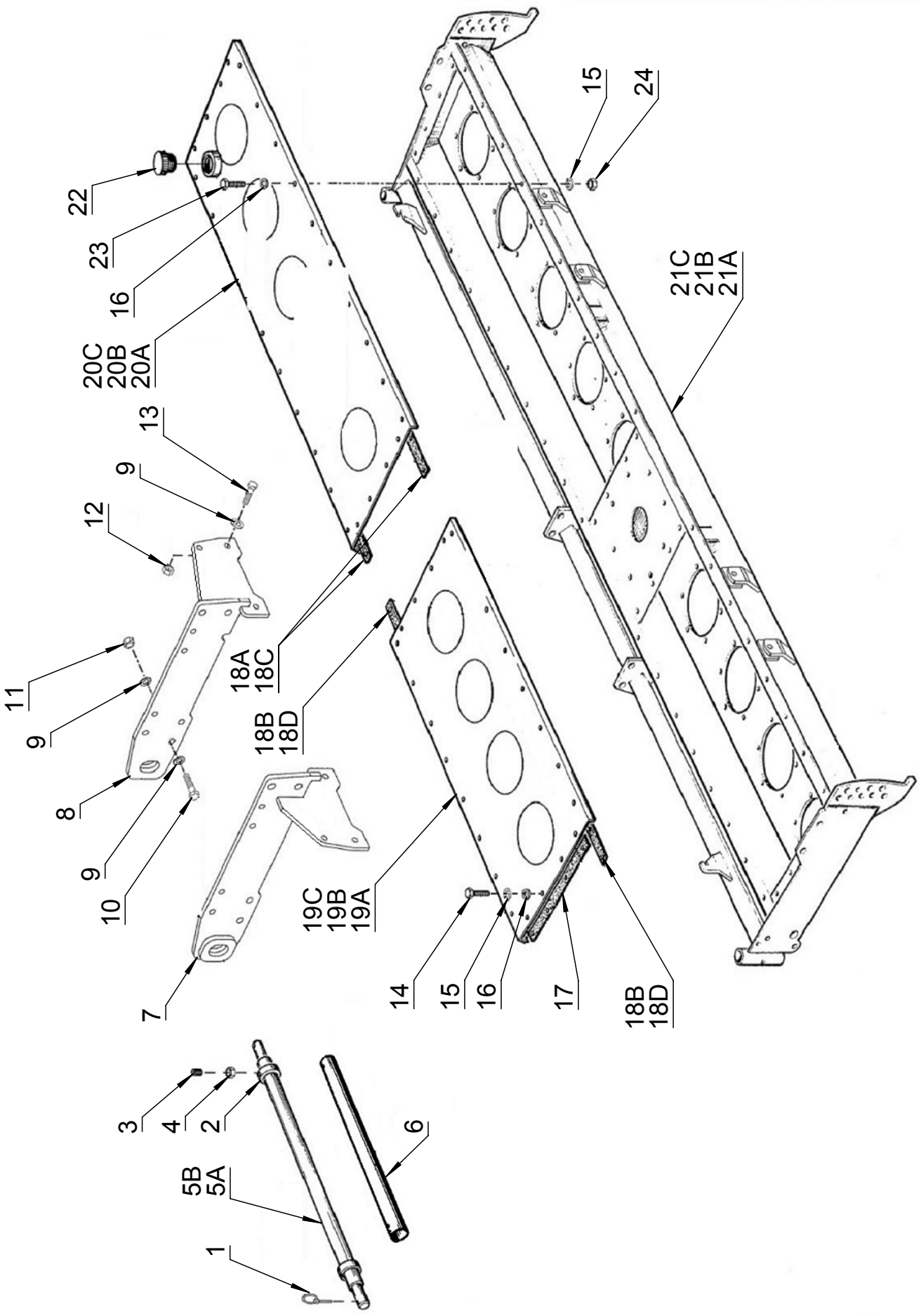
22
23
16
20C
20B
20A
13
9
12
11
9
8
9
10
7
18A
18C
18B
18D
19C
19B
19A
14
15
16
17
18B
18D
15
24
21C
21B
21A
3
4
2
5B
5A
1
6

GEAR TRAIN HOUSING

Tab.6 Date: 07.02.2018

Fig.	Part no.	Quantity						Description
		HK31-300 D STANDARD	HK31-300 D CARBIDE	HK31-350 D STANDARD	HK31-350 D CARBIDE	HK31-400 D STANDARD	HK31-400 D CARBIDE	
1	71208014530	2						COTTER PIN 11x60 DIN11023
2	71000182998	2						CLAMPING RING 63,5x12,5x20
3	71310410255	2						SCREW M10x25 FZB DIN916
4	300315001	2						NUT M10 Cl 8 FZB DIN934
5A	71000182952	1	1					COUPLING SHAFT
5B	71000184931			1	1	1	1	COUPLING SHAFT
6	71000187706			1	1	1	1	REINFORCING TUBE 60x8x736
7	71000187484	1						BRACKET LH
8	71000187485	1						BRACKET RH
9	300332009	12						WASHER M16 FZB DIN126
10	300304219	4						BOLT M16x55 CL 8.8 FZB DIN933
11	300316023	4						SELF-LOCKING NUT M16 CL 8 FZB DIN985
12	71208056470	4						SELF-LOCKING NUT M16x1,5 CL 10 FZB
13	73208056999	4						BOLT M16x1,5x44 CL 12.9
14	300304032	16						BOLT M10x25 CL 8.8 FZB DIN933
15	300332021	52	52	60	60	68	68	SPRING WASHER M10 FZB DIN127B
16	300332027	52	52	60	60	68	68	WASHER M10 FZB DIN126
17	71000182393	4						GASKET 28x3x340
18A	71000185350	2	2					GASKET 35x3x1212
18B	71000185351	2	2	2	2			GASKET 35x3x1458
18C	71000185352			2	2	2	2	GASKET 35x3x1704
18D	71000185353					2	2	GASKET 35x3x1950
19A	71000187481	1	1					COVER LH L=1458
19B	71000187489			1	1			COVER LH L=1458
19C	71000187365					1	1	COVER LH L=1950
20A	71000187482	1	1					COVER RH L=1212
20B	71000187490			1	1			COVER RH L=1704
20C	71000187366					1	1	COVER RH L=1704
21A	71000187417	1	1					TRANSMISSION BOX HK31-300
21B	71000187473			1	1			TRANSMISSION BOX HK31-350
21C	71000187474					1	1	TRANSMISSION BOX HK31-400
22	71203032260	1						PLUG 1 1/2" GN 552-A-2
23	300304034	36	36	44	44	52	52	BOLT M10x30 CL 8.8 FZB DIN933
24	300316020	36	36	44	44	52	52	SELF-LOCKING NUT M10 CL 8 FZB DIN985

Tab.7

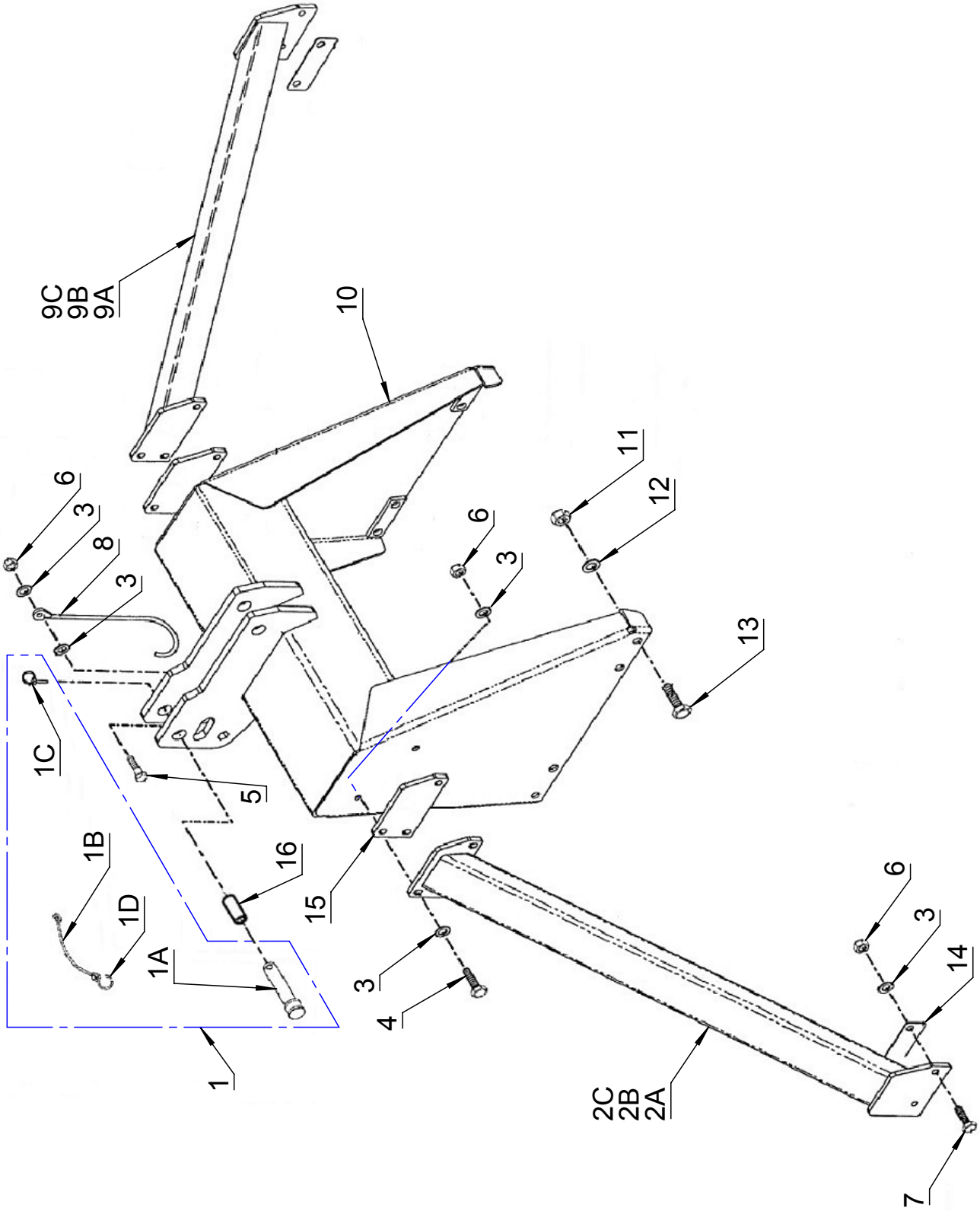

Tab.7 Date: 07.02.2018

Fig.	Part no.	Quantity						Description
		HK31-300 D STANDARD	HK31-300 D CARBIDE	HK31-350 D STANDARD	HK31-350 D CARBIDE	HK31-400 D STANDARD	HK31-400 D CARBIDE	
1	71000185383	1						TOP PIN ASSY
1A	71000622357	1						TOP PIN ZINK
1B	300717442	1						ELASTIC STRAP
1C	71208014530	1						COTTER PIN 11x60 DIN11023
1D	371007481	1						HOOK TYPE S
2A	71000187709	1	1					LATERAL BRACE
2B	71000187711			1	1			LATERAL BRACE
2C	71000187713					1	1	LATERAL BRACE
3	300332008	18						WASHER M12 FZB DIN126
4	300304056	6						BOLT M12x30 CL 8.8 FZB DIN933
5	300304060	1						BOLT M12x50 CL 8.8 FZB DIN931
6	300316021	11						SELF-LOCKING NUT M12 CL 8 FZB DIN985
7	300304048	4						BOLT M12x45 CL 8.8 FZB DIN933
8	71000187454	1						PTO HOLDER
9A	71000187710	1	1					LATERAL BRACE
9B	71000187712			1	1			LATERAL BRACE
9C	71000187714					1	1	LATERAL BRACE
10	71000187494	1						TOPMAST
11	300316023	8						SELF-LOCKING NUT M16 CL 8 FZB DIN985
12	300332009	8						WASHER M16 FZB DIN126
13	71309416505	8						BOLT M16x50 CL 10.9 DACROMET DIN933
14	71000187725	2						DISTANCE PLATE 43x123x1,5
15	330030123	2						DISTANCE PLATE 89x170x2
16	71000627126			1	1	1	1	SLEEVE 25,4x31,7x52 ZINC

Tab.8

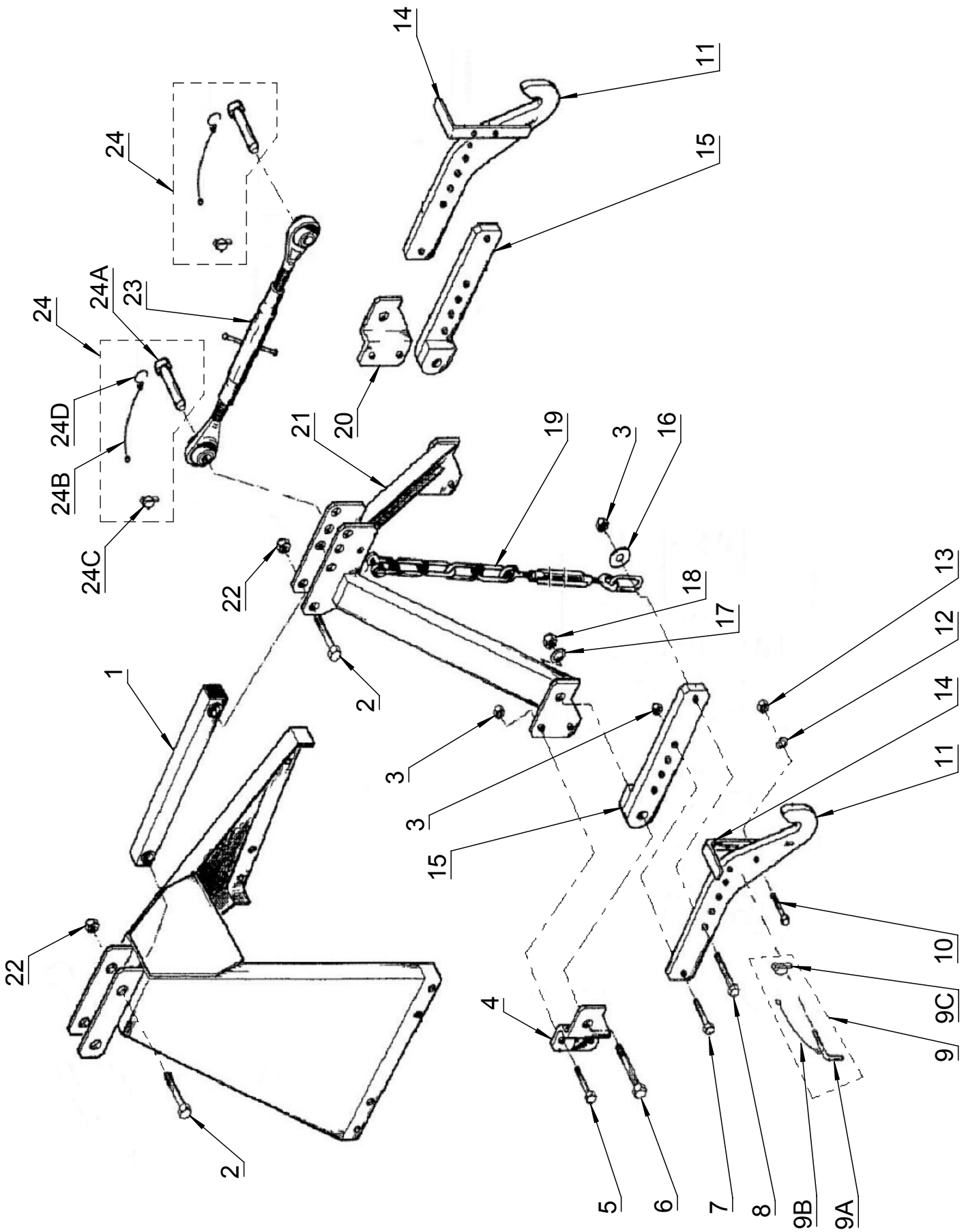

1
2
2
3
3
3
4
5
6
7
8
9
9A
9B
9C
10
11
11
12
13
14
14
15
15
16
17
18
19
20
21
22
22
23
24
24
24A
24B
24C
24D

Fig.	Part no.	Quantity	Description
1	71000647170	1	LINK
2	300304121	2	BOLT M24x110 CL 8.8 FZB DIN931
3	300316016	8	SELF-LOCKING NUT M20 CL 8 FZB DIN985
4	71000184225	1	BRACKET LH
5	300304117	4	BOLT M20x70 CL 8.8 FZB DIN931
6	71301627125	2	BOLT M27x120 CL 8.8 FZB DIN931
7	300304118	2	BOLT M20x75 CL 8.8 FZB DIN931
8	300304120	2	BOLT M20x90 CL 8.8 FZB DIN931
9	71000184229	2	PIN ASSY
9A	71000184230	1	PIN ZINK
9B	300717442	1	ELASTIC STRAP
9C	71208092010	1	COTTER PIN 5 DIN11023
10	300304060	2	BOLT M12x50 8.8 FZB DIN931
11	71000647176	2	HITCH
12	300332008	2	WASCHER M12 FZB DIN126
13	300316021	2	SELF-LOCKING NUT M12 cl.8 FZB DIN985
14	71000647178	2	LEVER
15	371093300	2	ARM
16	71000646763	2	WASHER 21x64,4x6
17	300332084	2	WASHER M27 FZB DIN126
18	71307227125	2	SELF-LOCKING NUT M27 CL 8 FZB DIN 985
19	71000646762	2	CHAIN ASSY
20	71000184226	1	BRACKET RH
21	71000184223	1	TOPMAST
22	300316040	2	SELF-LOCKING NUT M24 CL 8 FZB DIN985
23	371110900	1	TOP LINK KAT II L=830-1080
24	71000185383	2	TOP PIN ASSY
24A	71000622357	1	TOP PIN ZINK
24B	300717442	1	ELASTIC STRAP
24C	71208014530	1	COTTER PIN 11x60
24D	371007481	1	HOOK TYPE S

Tab.9

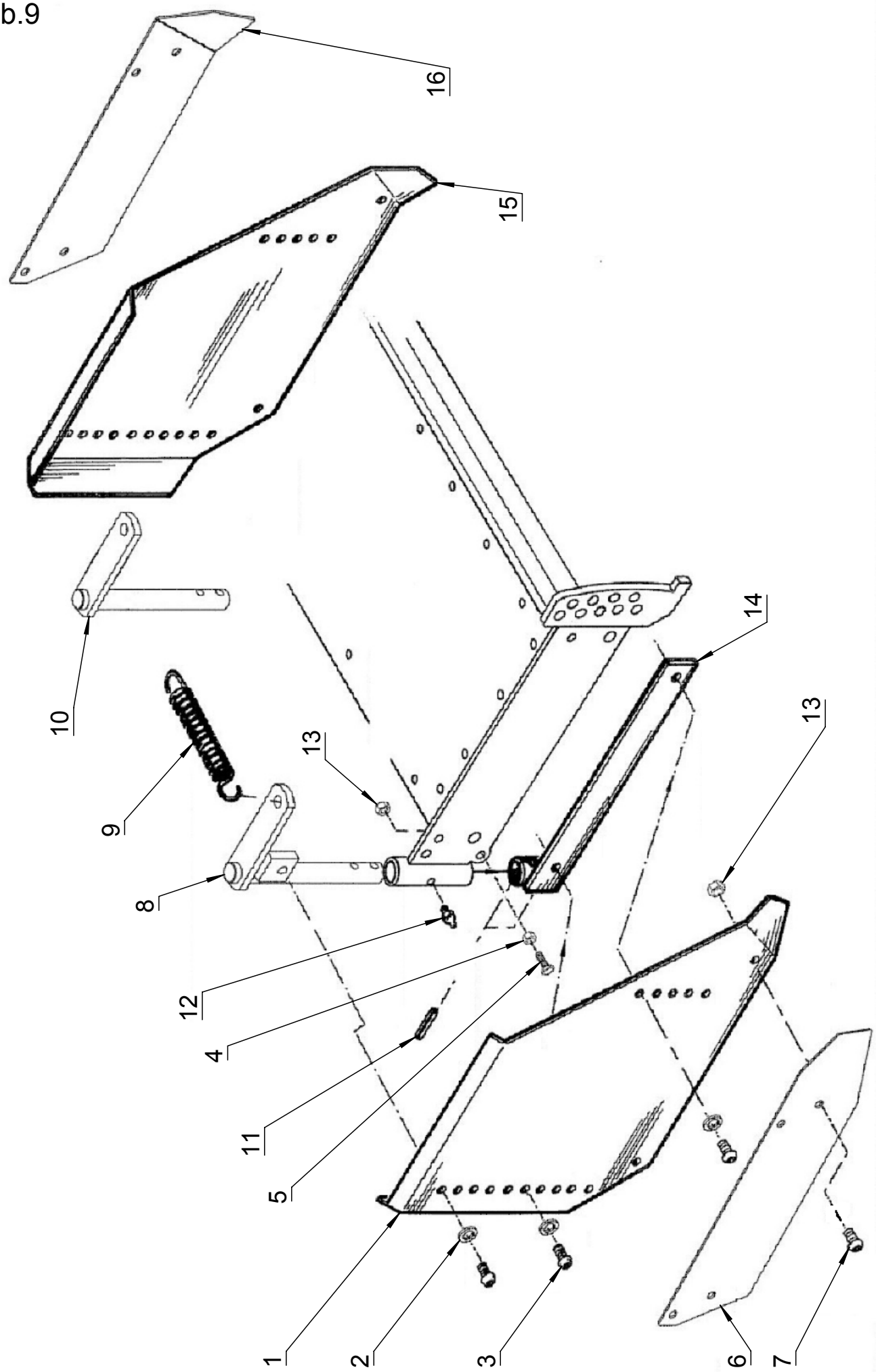

SIDE SHIELDS

Tab.9 Date: 07.02.2018

Fig.	Part no.	Quantity	Description
1	71000187456	1	SIDE GUARD LH
2	300332022	6	SPRING WASHER M12 FZB DIN127B
3	71304412205	6	ALLEN BOLT M12x20 CL 10.9 DACROMET ISO7380
4	71307212025	2	LOW NUT M12 CL 8 FZB DIN936
5	300304057	2	BOLT M12x35 CL 8.8 FZB DIN933
6	71000187492	1	SIDE GUARD EXTENSION LH
7	71304412250	8	ALLEN SCREW M12x25 CL 10.9 Dacr. ISO7380
8	71000187460	1	REGULATORY LEVER LH
9	71000184808	2	COMPRESSION SPRING
10	71000187461	1	LEVER RH
11	300323013	4	SPRING PIN HD 10x40 FZB DIN1481
12	300421006	2	GREASE NIPPLE AM8x1 DIN71412
13	300316021	10	SELF-LOCKING NUT M12 CL 8 FZB DIN985
14	71000187458	2	GUARD HINGE
15	71000187457	1	SIDE GUARD RH
16	71000187493	1	SIDE GUARD EXTENSION RH

Tab.10

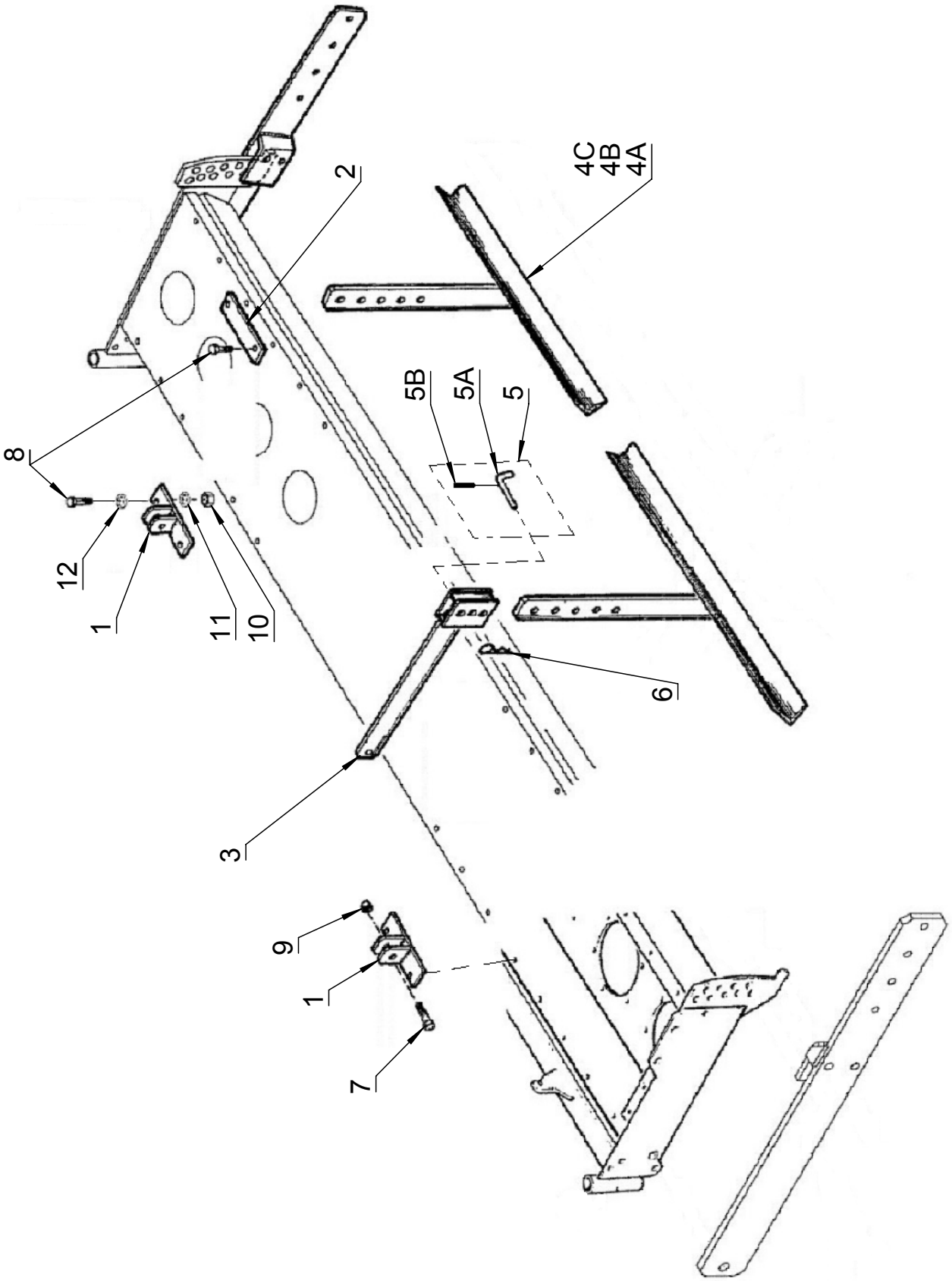

REAR LEVELLER BOARD ADJUST

Tab.10 Date: 07.02.2018

Fig.	Part no.	Quantity						Description
		HK31-300 D STANDARD	HK31-300 D CARBIDE	HK31-350 D STANDARD	HK31-350 D CARBIDE	HK31-400 D STANDARD	HK31-400 D CARBIDE	
1	71000182387	2	2	2	2	4	4	SUPPORT
2	71000182388	2	2	2	2	4	4	SUPPORTING PLATE
3	71000182395	2	2	2	2	4	4	ARM
4A	71000182399	1	1					LEVELLER BOARD 3,0m
4B	71000184978			1	1			LEVELLER BOARD 3,5m
4C	71000184783					1	1	LEVELLER BOARD 4,0m
5	71000627790	2	2	2	2	4	4	PIN ASSY
5A	71000629977	1	1	1	1	1	1	PIN ZINC
5B	300323025	1	1	1	1	1	1	SPRING PIN HD 5x30 FZB DIN1481
6	200214274	2	2	2	2	4	4	CLIP PIN R 4x90 FZB DIN11023
7	300304061	2	2	2	2	4	4	BOLT M12x55 CL 10.9 FZB DIN931
8	300304036	8	8	8	8	16	16	BOLT M10x40 CL 8.8 FZB DIN931
9	300316021	2	2	2	2	4	4	SELF LOCKING NUT M12 CL 8 FZB DIN985
10	300316020	8	8	8	8	16	16	SELF LOCKING NUT M10 CL 8 FZB DIN985
11	300332021	8	8	8	8	16	16	SPRING WASHER M10 FZB DIN127B
12	300332027	8	8	8	8	16	16	WASHER M10 FZB DIN126

Tab.11

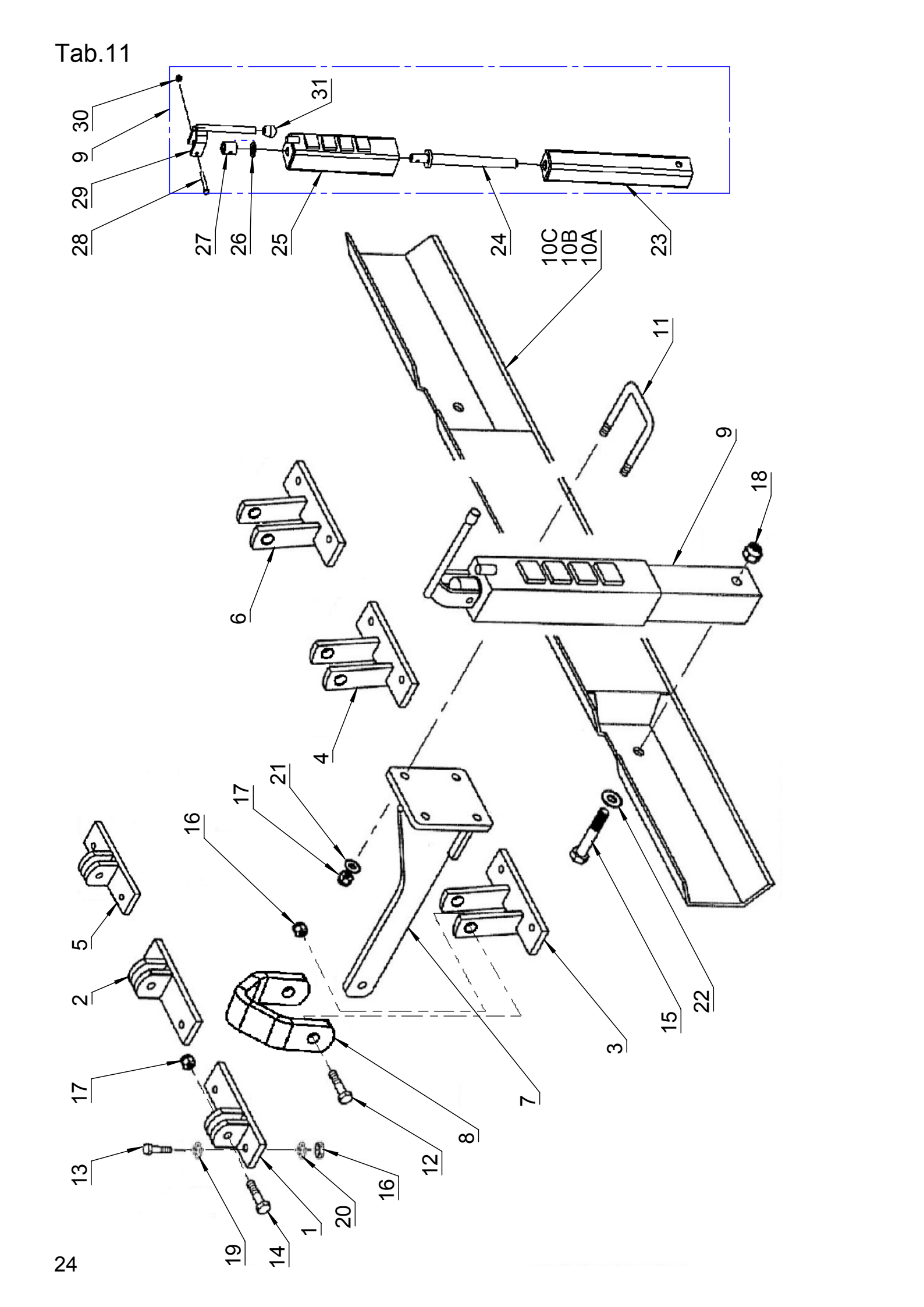
30
9
29
28
27
26
25
24
23
31
10C
10B
10A
11
9
18
6
4
21
17
16
5
2
17
13
19
14
1
20
16
12
8
7
3
15
22

REAR LEVELLER BOARD SCREW ADJUST

Tab.11 Date: 07.02.2018

Fig.	Part no.	Quantity HK31-300 D STANDARD	HK31-300 D CARBIDE	HK31-350 D STANDARD	HK31-350 D CARBIDE	HK31-400 D STANDARD	HK31-400 D CARBIDE	Description
1	71918900701	1	1	1	1			SUPPORT LH
2	71918900702	1	1	1	1			SUPPORT RH
3	71918900507	1	1	1	1			SUPPORT LH
4	71918900508	1	1	1	1			SUPPORT RH
5	71000182387					2	2	SUPPORT
6	71918900104					2	2	SUPPORT
7	71918900304	2						ARM
8	71918913600	2						CLAMP
9	71918900600	2						SCREW SYSTEM ASSY
10A	71918900830	1	1					LEVELLER BOARD 3,0m
10B	71918900835			1	1			LEVELLER BOARD 3,5m
10C	7191890840					1	1	LEVELLER BOARD 4,0m
11	71208007948	4						SHACKLE M12x100 FZB
12	300304034	4						BOLT M10x30 CL 8.8 FZB DIN933
13	300304036	8						BOLT M10x40 CL 8.8 FZB DIN931
14	300304061	2						BOLT M12x55 CL 10.9 FZB DIN931
15	300304097	2						BOLT M16x90 CL 8.8 FZB DIN931
16	300316020	12						SELF-LOCKING NUT M10 CL 8 FZB DIN985
17	300316021	10						SELF-LOCKING NUT M12 CL 8 FZB DIN985
18	300316023	2						SELF-LOCKING NUT M16 CL 8 FZB DIN985
19	300332027	8						WASHER M10 FZB DIN126
20	300332021	8						SPRING WASHER M10 FZB DIN127B
21	300332008	8						WASHER M12 FZB DIN126
22	300332009	2						WASHER M16 FZB DIN126
23	371097900	1						INSIDE TUBE
24	371097800	1						SCREW REGULATOR
25	371098100	1						OUTSIDE TUBE
26	300332034	1						WASHER M20 FZB DIN126
27	371002353	1						SLEEVE 20x30x37
28	300304162	1						BOLT M8x60 CL 8.8 FZB DIN931
29	71918900604	1						HANDLE
30	300316027	1						SELF-LOCKING NUT M8 CL 8 FZB DIN985
31	371002351	1						CASING 16x25

Tab.12

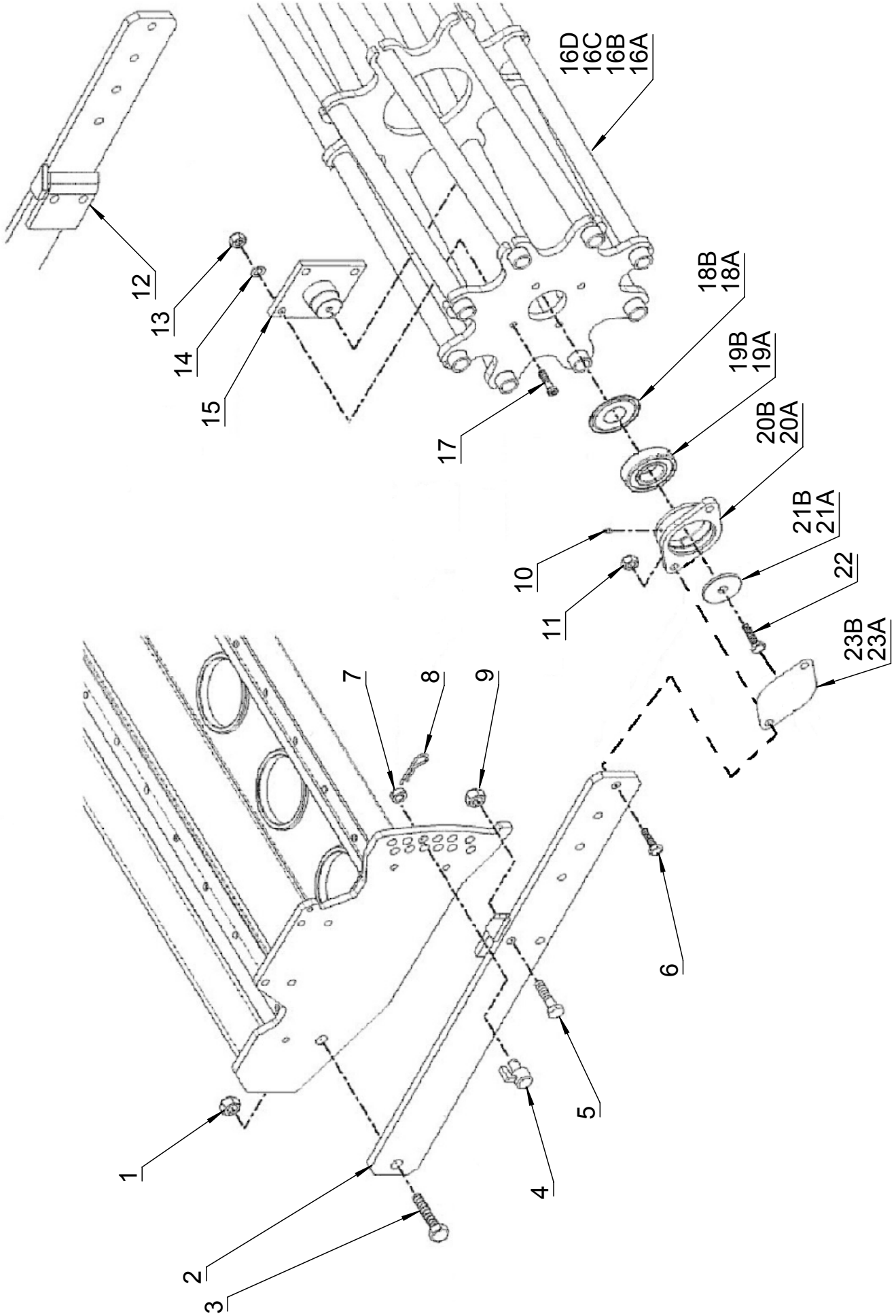
16D
16C
16B
16A
12
13
14
15
17
18B
18A
19B
19A
20B
20A
21B
21A
10
11
22
23B
23A
7
8
9
6
5
4
1
2
3

LEVELING BAR / CRUMBLE ROLLER

Tab.12 Date: 07.02.2018

Fig.	Part no.	Quantity						Description
		HK31-300 D STANDARD	HK31-300 D CARBIDE	HK31-350 D STANDARD	HK31-350 D CARBIDE	HK31-400 D STANDARD	HK31-400 D CARBIDE	
1	300316016	2						SELF-LOCKING NUT M20 CL 8 FZB DIN985
2	71000187464	1						ARM LH
3	300304117	2						BOLT M20x70 CL 8.8 FZB DIN931
4	71918909704	2						WELDED PIN
5	300304096	2						BOLT M16x70 CL 10.9 FZB DIN931
6	300304022	4						BOLT M14x55 CL 8.8 FZB DIN931
7	71918909701	2						SLEEVE 30x6,3x12 ZINC
8	200214274	2						CLIP PIN R 4x90 FZB DIN11023
9	300316023	2						SELF-LOCKING NUT M16 CL 8 FZB DIN985
10	300421002	2						GREASE NIPPLE M6x1 H1
11	71307214305	4						SELF-LOCKING NUT M14 CL 8 FZB DIN980V
12	71000187465	1						ARM RH
13	300316021	8						SELF-LOCKING NUT M12 cl.8 FZB DIN985
14	300332008	8						WASHER M12 FZB DIN126
15	71000182375	2						BEARING PIVOT
16A	71000182983	1	1					CRUMBLE ROLLER L=3,0m D=380mm
16B	71000184779	1	1					CRUMBLE ROLLER L=3,0m D=450mm
16C	71000184950			1	1			CRUMBLE ROLLER L=3,5m D=450mm
16D	71000184778					1	1	CRUMBLE ROLLER L=4,0m D=450mm
17	71346212505	8						CYLINDER HEAD SCREW M12x50 CL 8.8 FZB DIN912
18A	71254578030	2	2					NILOS-RING 6209 ZAV (ONLY FOR ROLLER D=380mm)
18B	71254590030	2						NILOS-RING 6309 ZAV
19A	71254585197	2	2					BEARING 172-6209-2RS1 (ONLY FOR ROLLER D=380mm)
19B	71254510250	2						BEARING 172-6309 B-2RS1
20A	71000180311	2	2					BEARING HOUSING (ONLY FOR ROLLER D=380mm)
20B	71000180310	2						BEARING HOUSING
21A	71000066406	2	2					WASHER 57x13,5x5 (ONLY FOR ROLLER D=380mm)
21B	300001981	2						SPECJAL WASHER
22	71301312305	2						BOLT M12x1,5x30 CL 8.8 FZB DIN961
23A	330030112	2	2					DISTANCE PLATE g=2mm (ONLY FOR ROLLER D=380mm)
23B	330030117	2						DISTANCE PLATE g=2mm

Tab.13

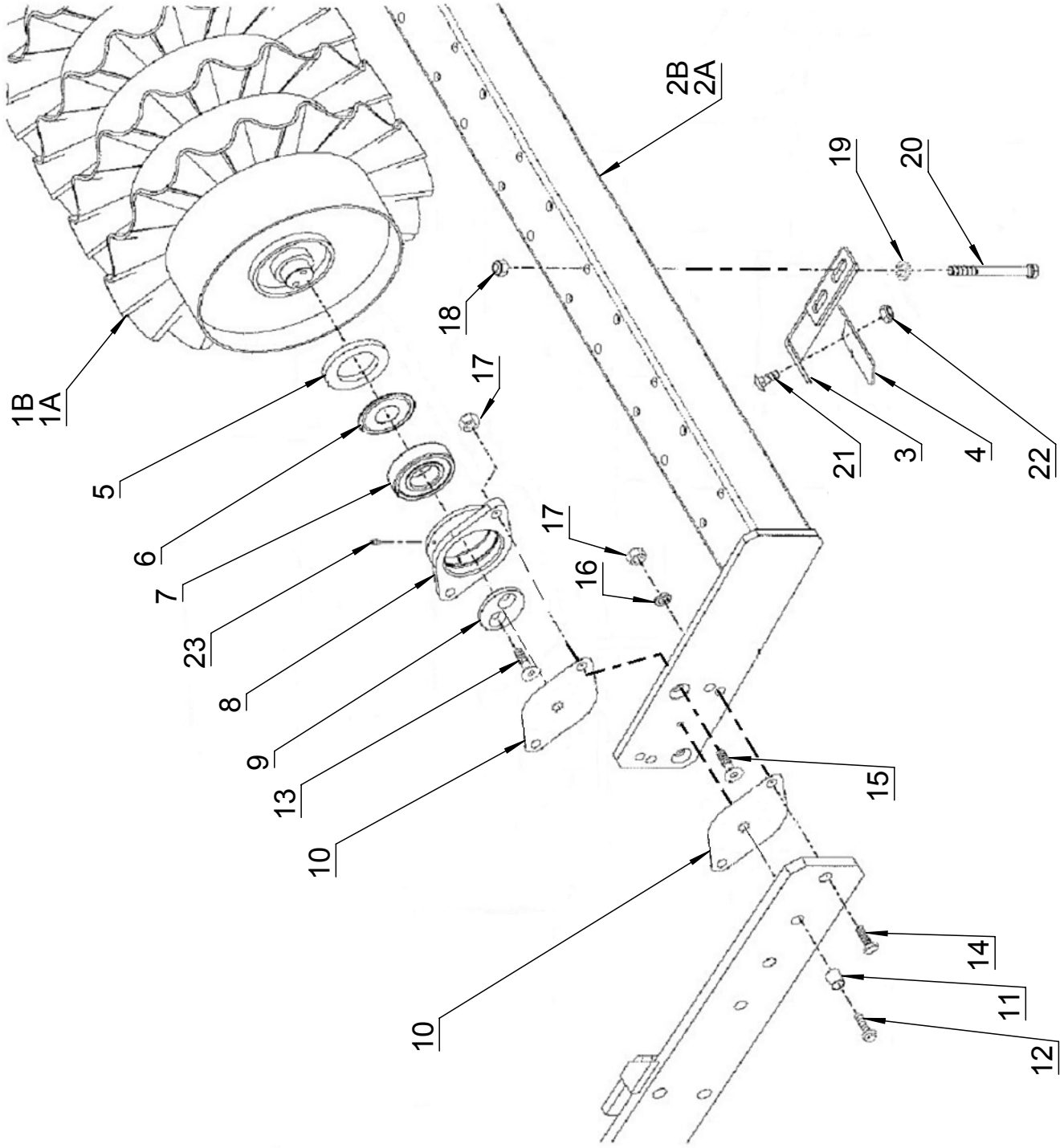

Tab.13 Date: 07.02.2018

Fig.	Part no.	Quantity HK31-300 D STANDARD	HK31-300 D CARBIDE	HK31-400 D STANDARD	HK31-400 D CARBIDE	Description
1A	71000182973	1	1			WAVE ROLLER L=3,0m
1B	71000184786			1	1	WAVE ROLLER L=4,0m
2A	71000184943	1	1			ROLLER FRAME L=3,0m
2B	71000184788			1	1	ROLLER FRAME L=4,0m
3	71000180367	23	23	30	30	SCRAPER SUPPORT
4	71000180368	23	23	30	30	SCRAPER
5	71000186668	2				SEALING RING 118x18x12,5
6	71254590030	2				NILOS-RING 6309 ZAV
7	71254510250	2				BEARING 172-6309 B-2RS1
8	71000180310	2				BEARING HOUSING
9	71000186665	2				SPECIAL WASHER 60x12
10	330030117	4				DISTANCE PLATE g=2mm
11	71208110030	2				SPRING PIN 14x14 FZB DIN7346
12	71208040230	2				SELF-ININATING SCREW M10x25 DIN7500 GALV
13	71339210350	4				CONICAL SCREW M10x35 CL 10.9 FZB DIN7991
14	300304022	4				BOLT M14x55 CL 8.8 FZB DIN931
15	71339214450	4				CONICAL SCREW M14x45 CL 10.9 FZB DIN7991
16	300332023	4				SPRING WASHER M14 FZB DIN127B
17	71307214305	8				SELF-LOCKING NUT M14 CL 8 FZB DIN980V
18	300316021	46	46	60	60	SELF-LOCKING NUT M12 CL 8 FZB DIN985
19	300332008	46	46	60	60	WASHER M12 FZB DIN126
20	300304269	46	46	60	60	BOLT M12x125 CL 8.8 FZB DIN931
21	300304190	23	23	30	30	BOLT BACKFILLED M8x20 CL 4.6 FZB DIN603
22	300316027	23	23	30	30	SELF-LOCKING NUT M8 CL 8 FZB DIN985
23	300421002	2				GREASE NIPPLE M6x1 H1

Tab.14

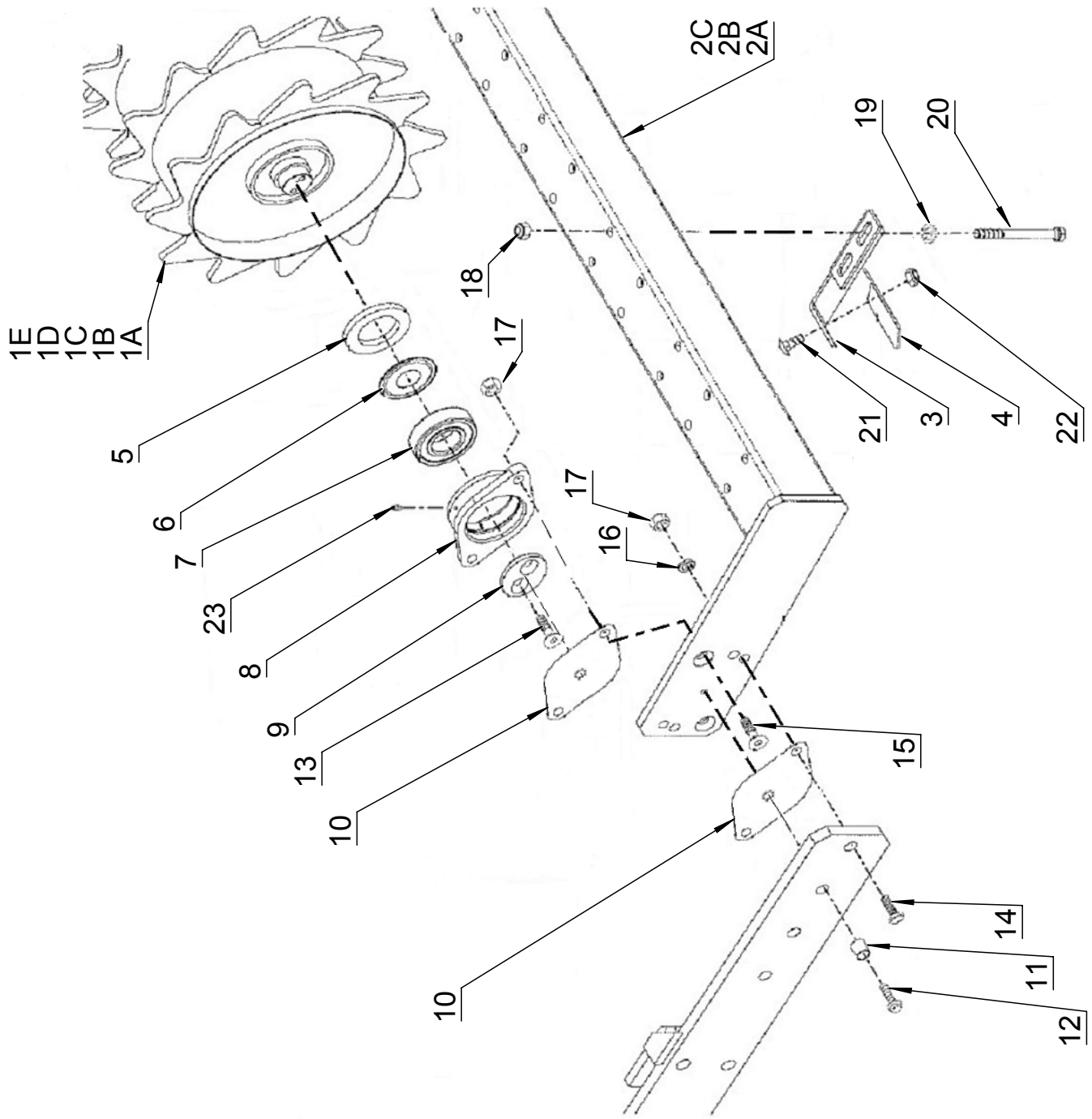
1E
1D
1C
1B
1A
5
6
7
23
8
9
13
10
10
18
17
17
16
2C
2B
2A
19
20
21
3
4
22
15
14
11
12

LEVELING BAR / TOOTH ROLLER

Tab.14 Date: 07.02.2018

Fig.	Part no.	Quantity						Description
		HK31-300 D STANDARD	HK31-300 D CARBIDE	HK31-350 D STANDARD	HK31-350 D CARBIDE	HK31-400 D STANDARD	HK31-400 D CARBIDE	
1A	71000180198	1	1					TOOTH ROLLER L=3,0m, D=450mm
1B	71000184608			1	1			TOOTH ROLLER L=3,5m, D=450mm
1C	71000184609					1	1	TOOTH ROLLER L=4,0m, D=450mm
1D	71000180063	1	1					TOOTH ROLLER L=3,0m, D=500mm
1E	71000180064					1	1	TOOTH ROLLER L=4,0m, D=500mm
2A	71000184943	1	1					ROLLER FRAME L=3,0m
2B	71000185298			1	1			ROLLER FRAME L=3,5m
2C	71000184788					1	1	ROLLER FRAME L=4,0m
3	71000180367	23	23	26	26	30	30	SCRAPER SUPPORT
4	71000180368	23	23	26	26	30	30	SCRAPER
5	71000186668	2						SEALING RING 118x18x12,5
6	71254590030	2						NILOS-RING 6309 ZAV
7	71254510250	2						BEARING 172-6309 B-2RS1
8	71000180310	2						BEARING HOUSING
9	71000186665	2						SPECIAL WASHER 60x12
10	330030117	4						DISTANCE PLATE g=2mm
11	71208110030	2						SPRING PIN 14x14 FZB DIN7346
12	71208040230	2						SELF-ININATING SCREW M10x25 DIN7500 GALV
13	71339210350	4						CONICAL SCREW M10x35 CL 10.9 FZB DIN7991
14	300304022	4						BOLT M14x55 CL 8.8 FZB DIN931
15	71339214450	4						CONICAL SCREW M14x45 CL 10.9 FZB DIN7991
16	300332023	4						SPRING WASHER M14 FZB DIN127B
17	71307214305	8						SELF-LOCKING NUT M14 CL 8 FZB DIN980V
18	300316021	46	46	52	52	60	60	SELF-LOCKING NUT M12 CL 8 FZB DIN985
19	300332008	46	46	52	52	60	60	WASHER M12 FZB DIN126
20	300304269	46	46	52	52	60	60	BOLT M12x125 CL 8.8 FZB DIN931
21	300304190	23	23	26	26	30	30	BOLT BACKFILLED M8x20 CL 4.6 FZB DIN603
22	300316027	23	23	26	26	30	30	SELF-LOCKING NUT M8 CL 8 FZB DIN985
23	300421002	2						GREASE NIPPLE M6x1 H1

Tab.15

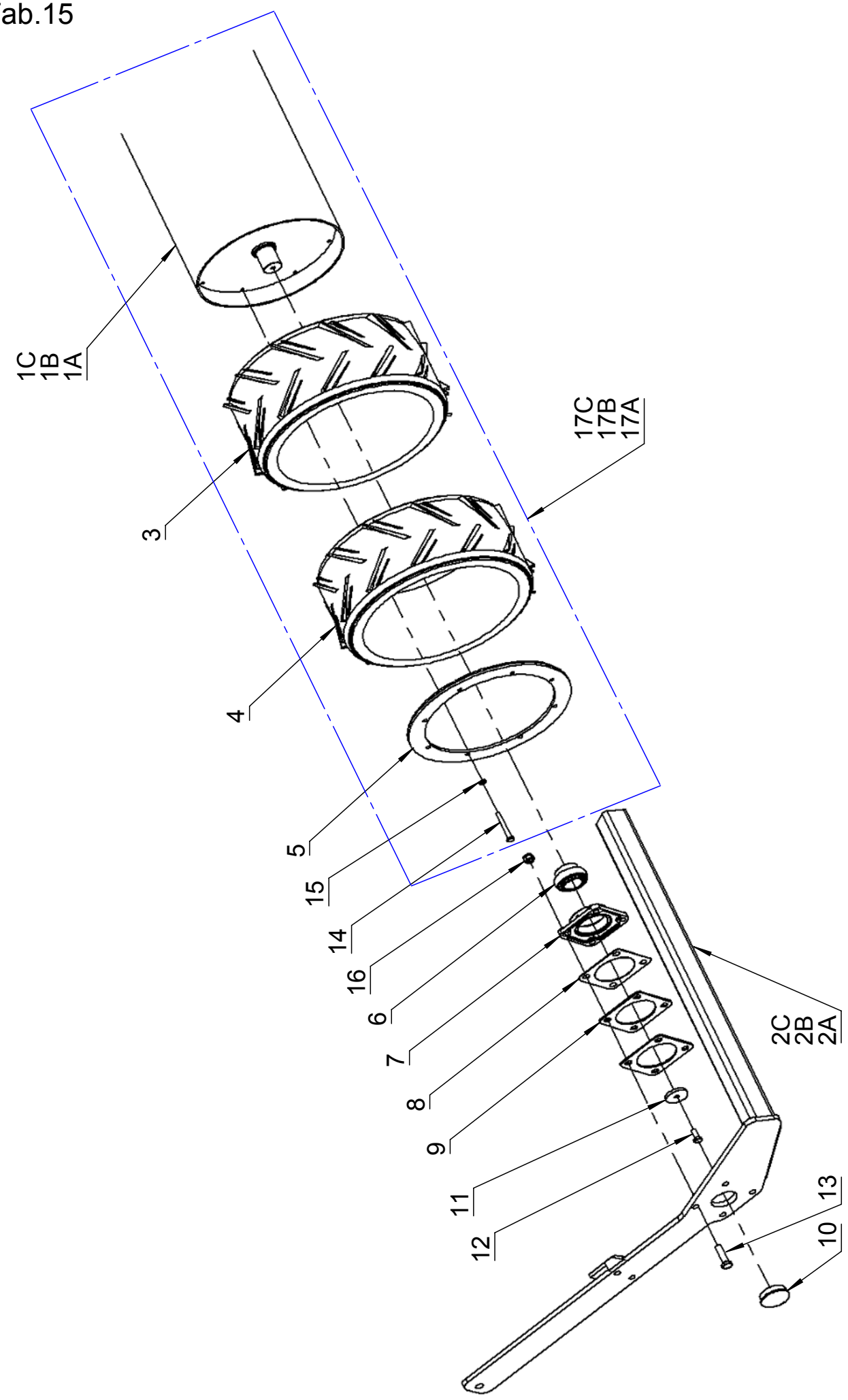

LEVELING BAR / RUBBER ROLLER

Tab.15 Date: 07.02.2018

Fig.	Part no.	Quantity						Description
		HK31-300 D STANDARD	HK31-300 D CARBIDE	HK31-350 D STANDARD	HK31-350 D CARBIDE	HK31-400 D STANDARD	HK31-400 D CARBIDE	
1A	371140100	1	1					SHAFT WA L=3,0m
1B	330030010			1	1			SHAFT WA L=3,5m
1C	371168300					1	1	SHAFT WA L=4,0m
2A	71918910830	1	1					FRAME RUBBER ROLLER L=3,0m
2B	71918910835			1	1			FRAME RUBBER ROLLER L=3,5m
2C	71918910840					1	1	FRAME RUBBER ROLLER L=4,0m
3	371002698	10	10	12	12	14	14	RUBBER ROLL 520x250 CTXRR - MIDDLE TYPE
4	371002699	2						RUBBER ROLL 520x229 CTXR - END TYPE
5	371124300	2						SIDE PLATE
6	372006939	2						BEARING SKF YARAG 210
7	372006938	2						BEARING HOUSING SKF FYJ510
8	300007012	2						DISTANCE PLATE g=2mm
9	330030111	4						DISTANCE PLATE g=4mm
10	71208044500	2						PLUG GPN 300-F41
11	71918835400	2						WASHER 13x60x8
12	71309412305	2						BOLT M12x30 CL 10.9 DACROMET DIN933
13	300304095	8						BOLT M16x60 CL 10.9 DACROMET DIN931
14	300304043	16						BOLT M10x90 CL 8.8 FZB DIN931
15	300332021	16						SPRING WASHER M10 FZB DIN127B
16	300316023	8						SELF-LOCKING NUT M16 CL 8 FZB DIN985
17A	71222042507	1	1					RUBBER ROLLER ASSY L=3,0m
17B	71222042508			1	1			RUBBER ROLLER ASSY L=3,5m
17C	71222042509					1	1	RUBBER ROLLER ASSY L=4,0m

Tab.16

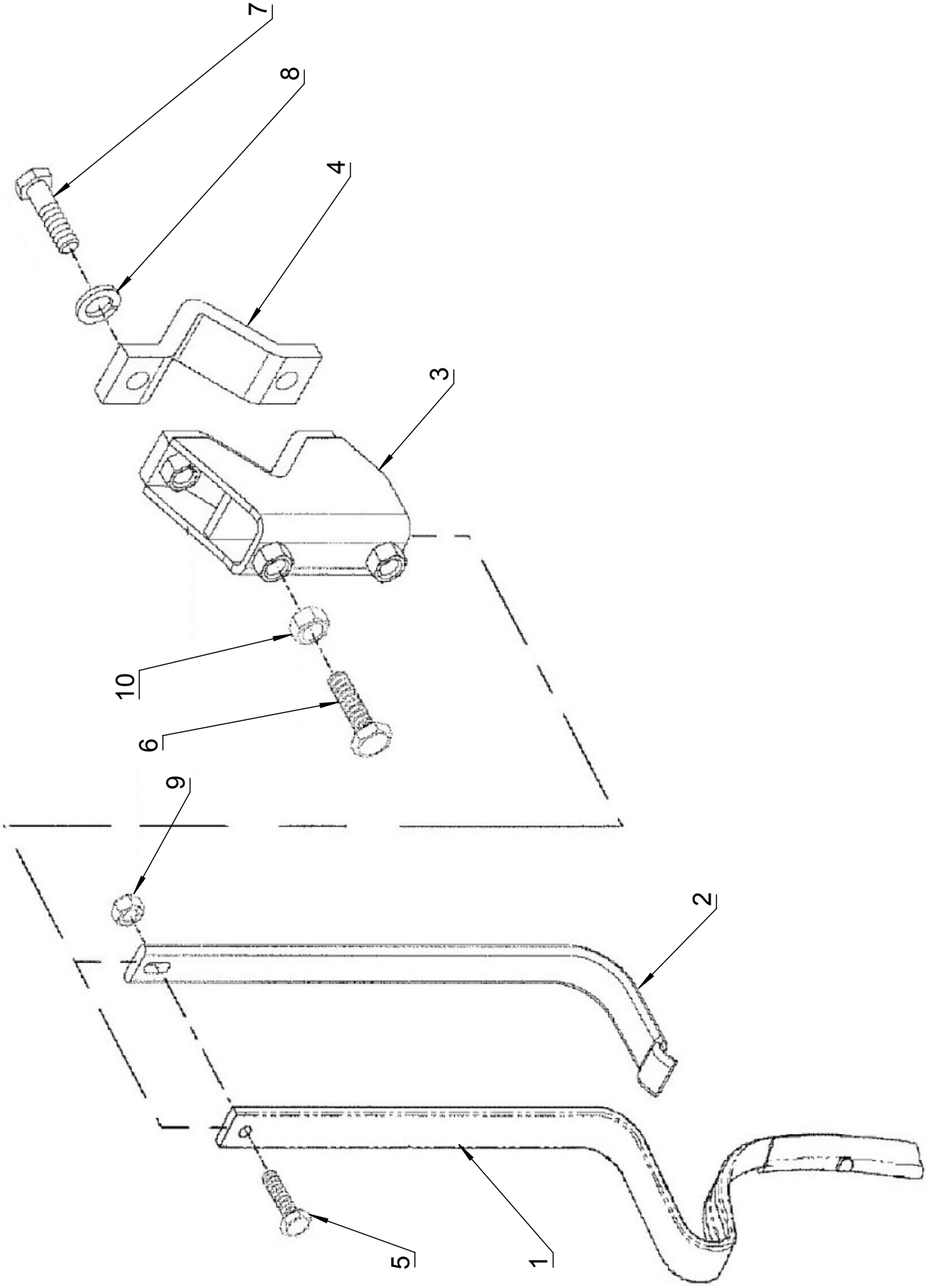

TRACK ERADICATOR TINE

Tab.16 Date: 07.02.2018

Fig.	Part no.	Quantity	Description
1	71209026400	2	CULTIVATOR TINE 40x10x785 WITH COULTER 35x6x195
2	71209026410	2	REINFORCEMENT SPRING 40x10x490
3	71000109115R	2	SUPPORT
4	71000624310R	2	CLAMP
5	300304057	2	BOLT M12x35 CL 8.8 FZB DIN933
6	71301414455	4	BOLT M14x45 CL 8.8 FZB DIN933
7	300304022	4	BOLT M14x55 CL 8.8 FZB DIN931
8	300332023	4	SPRING WASHER M14 FZB DIN127B
9	300316021	2	SELF-LOCKING NUT M12 CL 8 FZB DIN985
10	300315004	4	NUT M14 CL 8 FZB DIN934

Tab.17

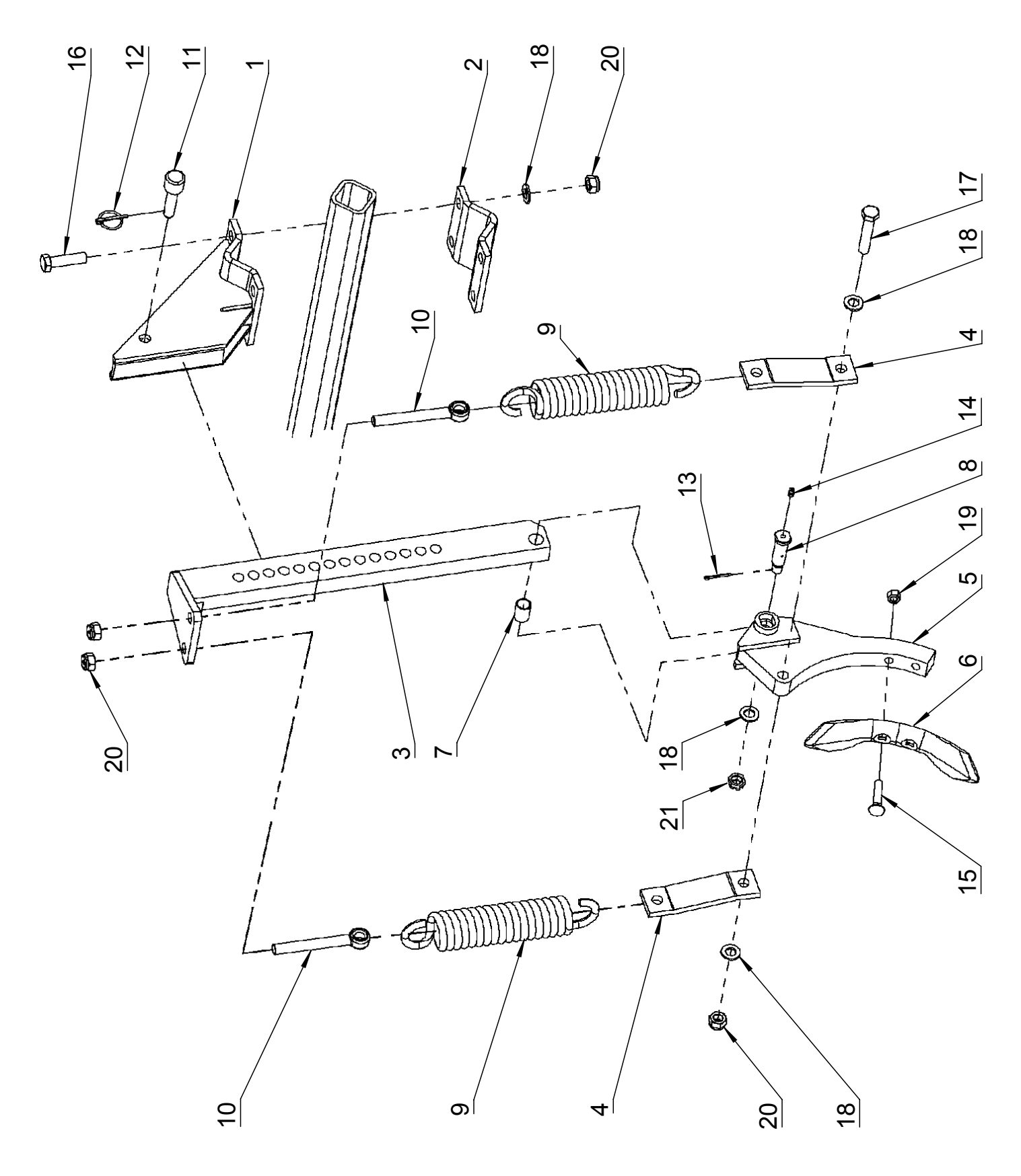

TRACK ERADICATOR SPRING

Tab.17 Date: 07.02.2018

Fig.	Part no.	Quantity	Description
1	73000HF0822	2	TRACK ERADICATOR SPRING SUPPORT
2	373006235	2	CLAMP
3	73000HF0818	2	GUIDEWAY
4	73000HF0829	4	PLATE TO SPRING
5	73000HF0814	2	COULTER SUPPORT
6	105000808	2	COULTER 65x6x296
7	71252023303	2	SLEEVE 20x23x30
8	372005338	2	PIN 20x54
9	73000HF0112	4	SPRING 12x50x300
10	300304319	4	EYE BOLT M16x140 CL 8.8 FZB DIN444
11	71000186898	2	PIN D=16
12	71208092010	2	COTTER PIN 5 DIN11023
13	7000547330	2	COTTER 4x32 FZB DIN94
14	300421006	2	GREASE NIPPLE M8x1
15	100323306	4	PLOUGH BOLT M12x60 CL 8.8 FZB DIN608
16	300304095	8	BOLT M16x60 CL 10.9 DACROMET DIN931
17	300304275	2	BOLT M16x80 CL 10.9 DARKOMET DIN931
18	300332009	14	WASHER M16 FZB DIN126
19	300315003	4	NUT M12 CL 8 FZB DIN934
20	300316023	14	SELF-LOCKING NUT M16 CL 8 FZB DIN985
21	300316080	2	CROWN NUT M16x1,5 CL 8 FZB DIN937

330030124 – 2018.02.07
You can always find the latest version of the manuals at www.kongskilde.com