KONGSKILDE

Vibro Crop Intelli

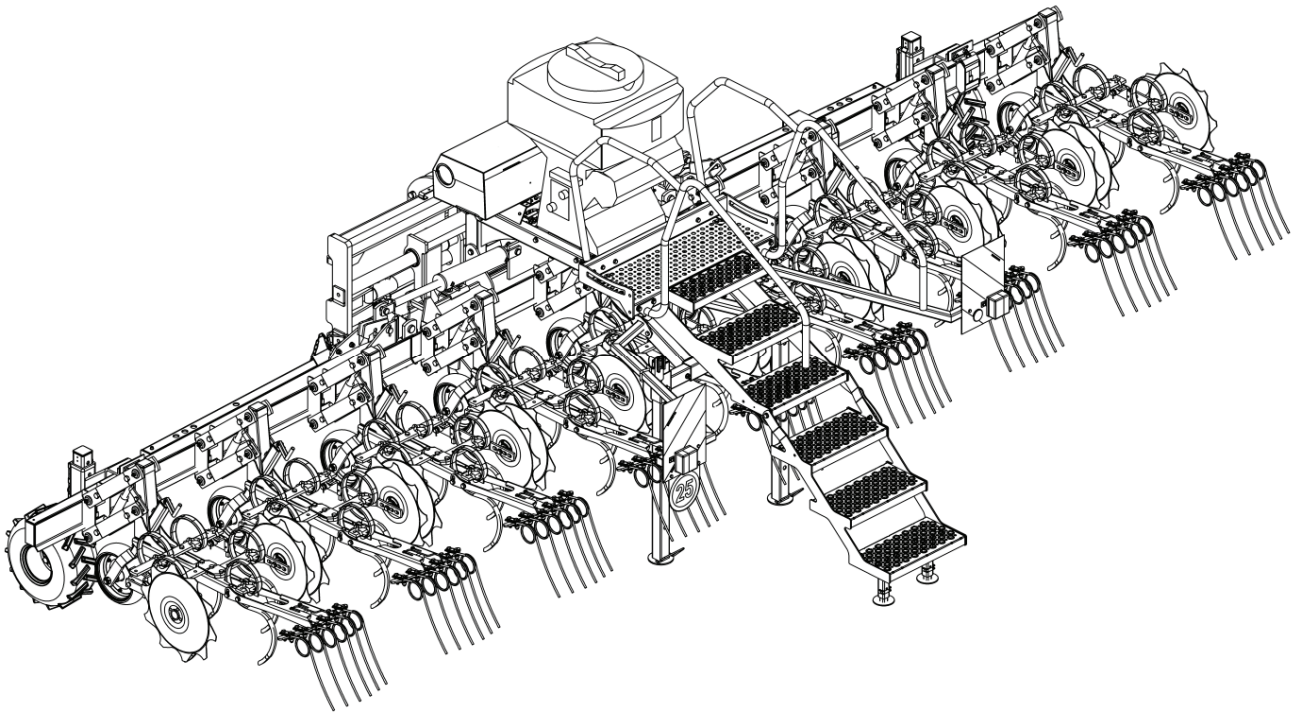

Reservedelsliste
Spare parts list
Ersatzteilliste
Onderdelenlijst
Liste de piece de rechange
Catalogul de piese de schimb
Katalog części zamiennych

Tab.1

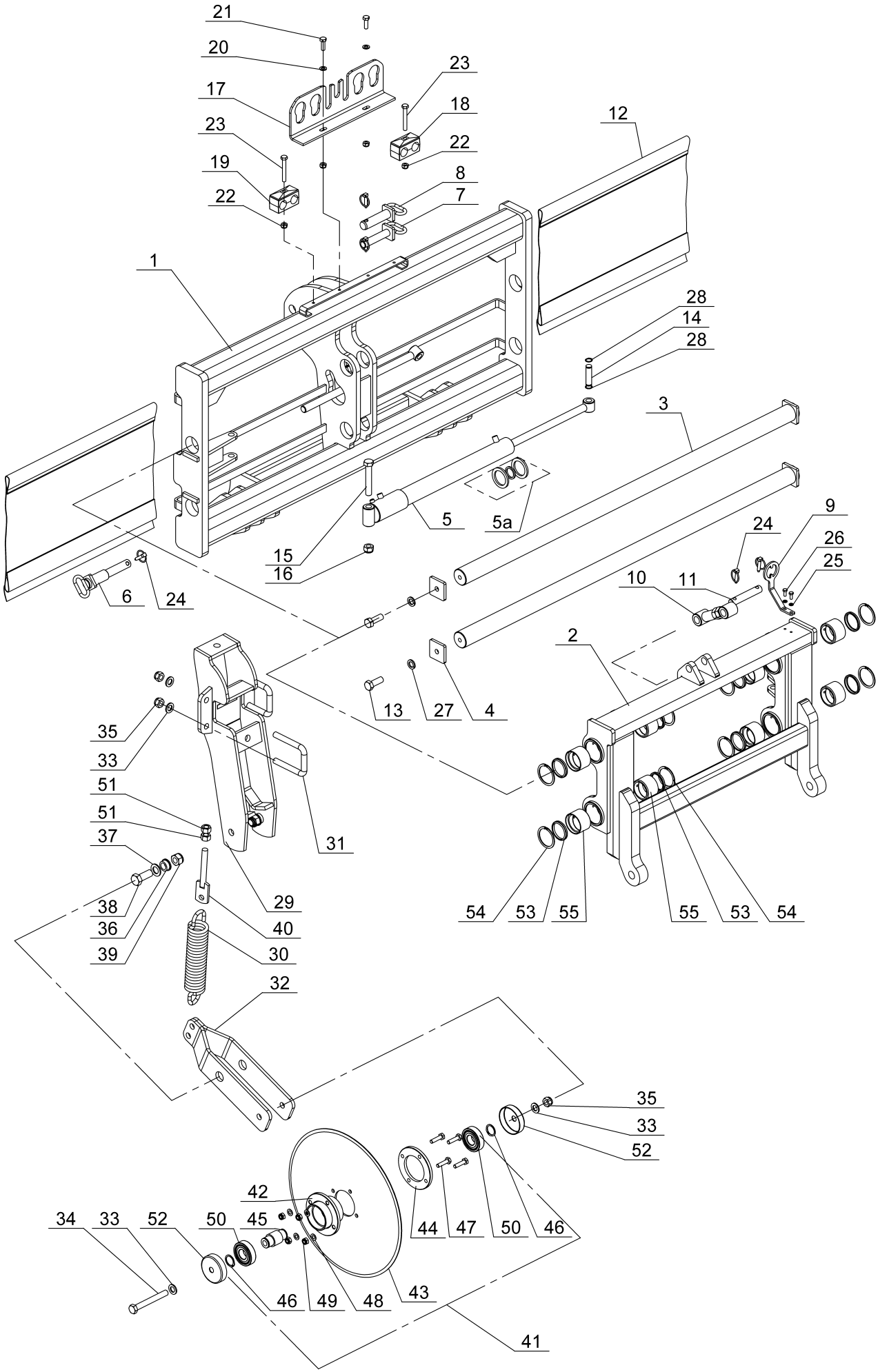
21
20
17
23
19
22
23
18
22
12
8
7
1
28
14
28
3
5
5a
9
24
26
25
15
16
6
24
10
11
2
13
27
4
35
33
51
51
37
31
38
36
39
29
40
30
32
54
53
55
55
53
54
35
33
52
42
34
33
52
50
45
44
47
50
46
46
49
48
43
41

Tab.1

Fig.	Serial no.	Part no.	Quantity	Description
1		300008322	1	Fixed frame
2		300008323	1	Shift frame
3		300008324	2	Guiding rod
4		300008330	2	Locking plate
5		300008266	1	Shift cylinder
5a		300008267	1	Sealing kit
6		300008328	2	Pin category II-III
7		300008327	1	Top pin category II
8		300008326	1	Top pin category III
9		300008331	1	Marking plate
10		300007739	1	Top link
11		300008329	1	Pin
12		300008301	2	Protective tarpaulin
13		300304107	2	Bolt M24x55 8.8 ISO 4017
14		300008332	1	Cylinder pin
15		300304111	1	Bolt M20x120 10.9 ISO 4014
16		300316016	1	Nut M20 ISO 10511
17		300008315	1	Holder for hydraulic plugs
18		360006414	1	Clamp for hoses 2x20
19		300008344	1	Clamp for hoses 2x22
20		300332039	4	washer M8 ISO 7091
21		300304155	2	Bolt M8x25 8.8 ISO 4017
22		300316027	4	Nut M8 ISO 10511
23		300304162	2	Bolt M8x60 ISO 4014
24		7000226328	6	Linch Pin
25		7000583508	2	Spring washer M8 DIN 127
26		300304153	2	Bolt M8x20 ISO 4017
27		300332024	2	Washer M20 DIN127B
28		100407011	2	External circlip DIN 471-20x1,2
29		300398800	1	Disc bracket-welded
30		101019349	1	Spring
31		300008335	2	U-bolt M16
32		300398700	1	Arm welded - stabilizing disc
33		300332009	6	Washer M16 ISO 7091
34		300304088	1	Bolt M16x130 8.8 ISO 4014
35		300316023	5	Nut M16 ISO 10511
36		300008341	2	Bush
37		300332034	2	Washer M20 ISO 7091
38		300304106	2	Bolt M24x50 8.8 ISO 4017
39		300316016	2	Nut M20 ISO 10511
40		101019350	1	Spring bracket
41		300399200	1	Stabilizing disc complete
42		300399100	1	Hub
43		300008343	1	Disc
44		300008347	1	Flange hub-painted
45		300008346	1	Axel of disc
46		300407011	2	External circlip DIN 471
47		300304036	4	Bolt M10x40 8.8 ISO 4014
48		300332027	4	Washer M10 ISO 7091
49		300316020	4	Nut M10 ISO 10511
50		300401052	2	Bearing 6306 2RS1
51		71307216010	2	Nut M16 ISO 4032
52		300008288	2	Hub cap
53		300007738	8	Stripper
54		300008233	8	Internal clip DIN472
55		300008325	8	Bronze bearing

Tab.2

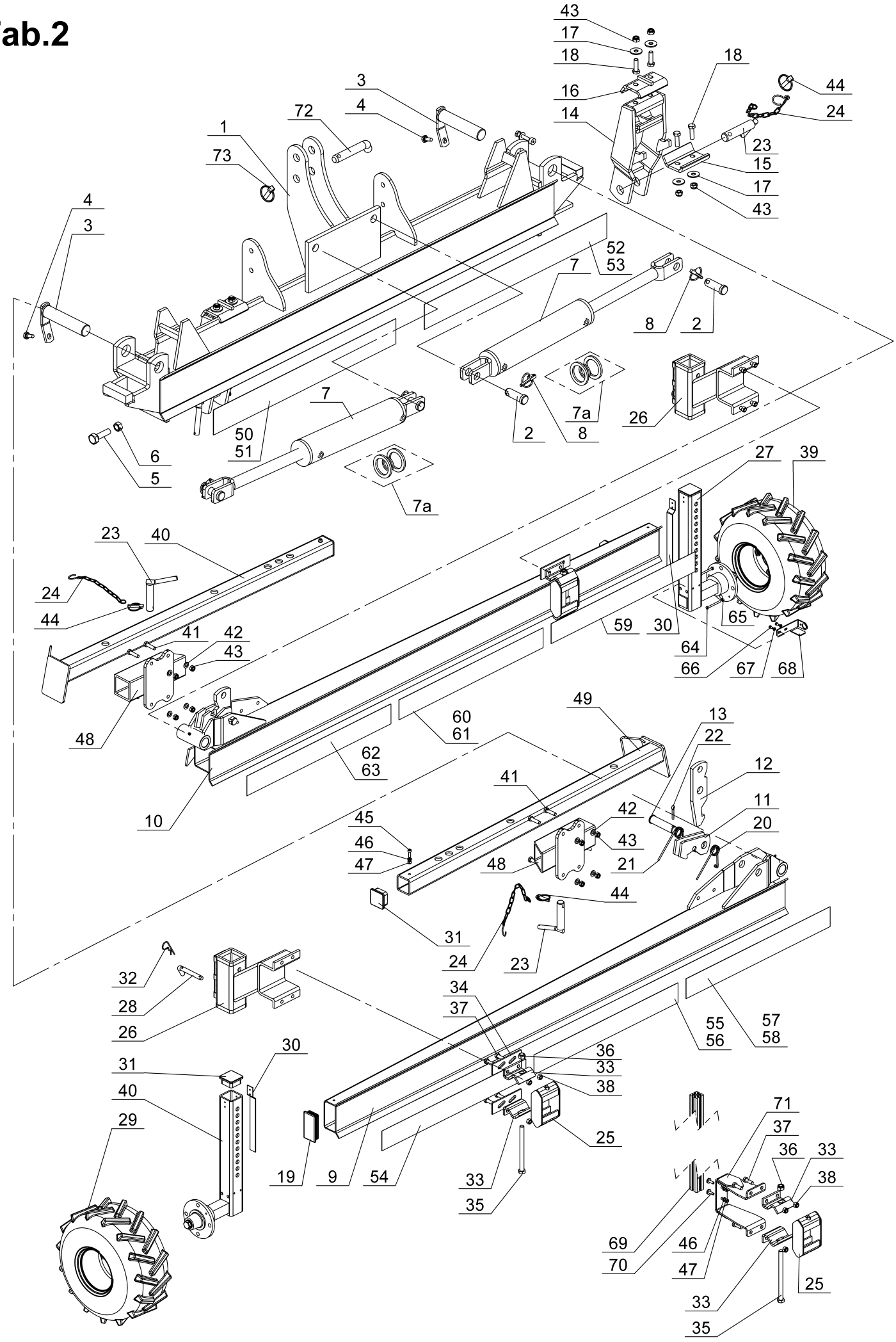
43
17
18
18
44
24
16
14
23
15
17
43
3
4
72
1
73
4
3
52
53
7
8
2
7
7a
26
2
8
50
51
6
5
7a
27
39
23
40
24
44
41
42
43
59
30
65
64
66
67
68
48
60
61
49
13
22
62
63
12
41
11
42
45
20
46
43
47
48
21
44
31
24
23
32
28
26
34
37
55
56
57
58
36
33
38
30
31
40
29
25
71
37
36
33
38
19
9
54
33
35
69
70
46
47
25
33
35

Tab.2

Fig.	Serial no.	Part no.	Quantity	Description
1		300360600	1	Central Frame VCO, 1.7M
2		101000786	4	Pin 24x78
3		101017117	2	Pin
4		300304055	2	Bolt M12x25 8.8 FZB ISO 4017
5		100306066	2	Bolt M20x60 8.8 FZB ISO 4017
6		300315009	2	Nut M20 ISO 4032
7		101000456	2	Hydraulic cylinder
7a		101000797	2	Sealing kit
8		100333014	4	Linch pin 8x40
9		300392300	1	VBTF WING, 2.5M, LEFT
10		300392200	1	VBTF WING, 2.5M, RIGHT
11		101017081	2	Trigger
12		101017080	2	Trigger
13		101017979	2	Pin 30x125
14		101016277	2	Bracket
15		101017248	2	Bottom holder
16		101017252	2	Upper holder
17		300332008	8	Washer M12 ISO 7089
18		300304058	8	Bolt M12 x 40 8.8 ISO 4017
19		300007971	2	Cap
20		101017044	2	Spring
21		101017045	2	Spring
22		100333008	2	Split pin 8x40
23		101000842	4	Pin
24		71000180109	4	Chain
25		300362800	3	Camera bracket
26		300357200	2	Front wheel support
27		300171900	2	Wheel arm
28		300169700	2	Pin
29		300174800	1	Wheel 18x9.50-8 left
30		300003918	2	Wheel depth indicator
31		300004066	4	Cap
32		300333065	2	Cotter pin
33		300007523	4	Clamp
34		101017182	4	Distance plate
35		200215449	3	Bolt M16x220 8.8 FZB ISO 4014
36		300316023	2	Nut M16 ISO 10511
37		300304057	12	Bolt M12 x 35 8.8 FZB ISO 4017
38		300315003	12	Nut M12 ISO 4032
39		300172200	1	Wheel 18x9.50-8 right
40		300391700	1	Front parking leg - left
41		300304059	8	Bolt M12 x 35 8.8 ISO 4017
42		300332008	16	Washer M12 ISO 7089
43		300316021	16	Nut M12 ISO 10511
44		300323046	4	Linch pin 11x45
45		7000521527	2	Bolt M8x25 8.8 FZB ISO 4762
46		300332039	4	Washer M8 FZB ISO 7089
47		300316027	4	Nut M8 ISO 10511
48		300391600	2	Front leg holder
49		300391700	1	Front parking leg - left
50		101017133	1	Label row width 45-55 cm
51		101017402	1	Label row width 55-80 cm
52		101017132	1	Label row width 45-55 cm
53		101017401	1	Label row width 55-80 cm
54		101017139	1	Label row width 45-55 cm
55		101017137	1	Label row width 45-55 cm
56		101017406	1	Label row width 55-80 cm
57		101017135	1	Label row width 45-55 cm
58		101017404	1	Label row width 55-80 cm
59		101017138	1	Label row width 45-55 cm
60		101017136	1	Label row widt 45-55 cm
61		101017405	1	Label row width 55-80 cm
62		101017134	1	Label row width 45-55 cm
63		101017403	1	Label row width 55-80 cm
64		300304147	2	Bolt M6x70 8.8 FZB ISO 4014

Tab.2

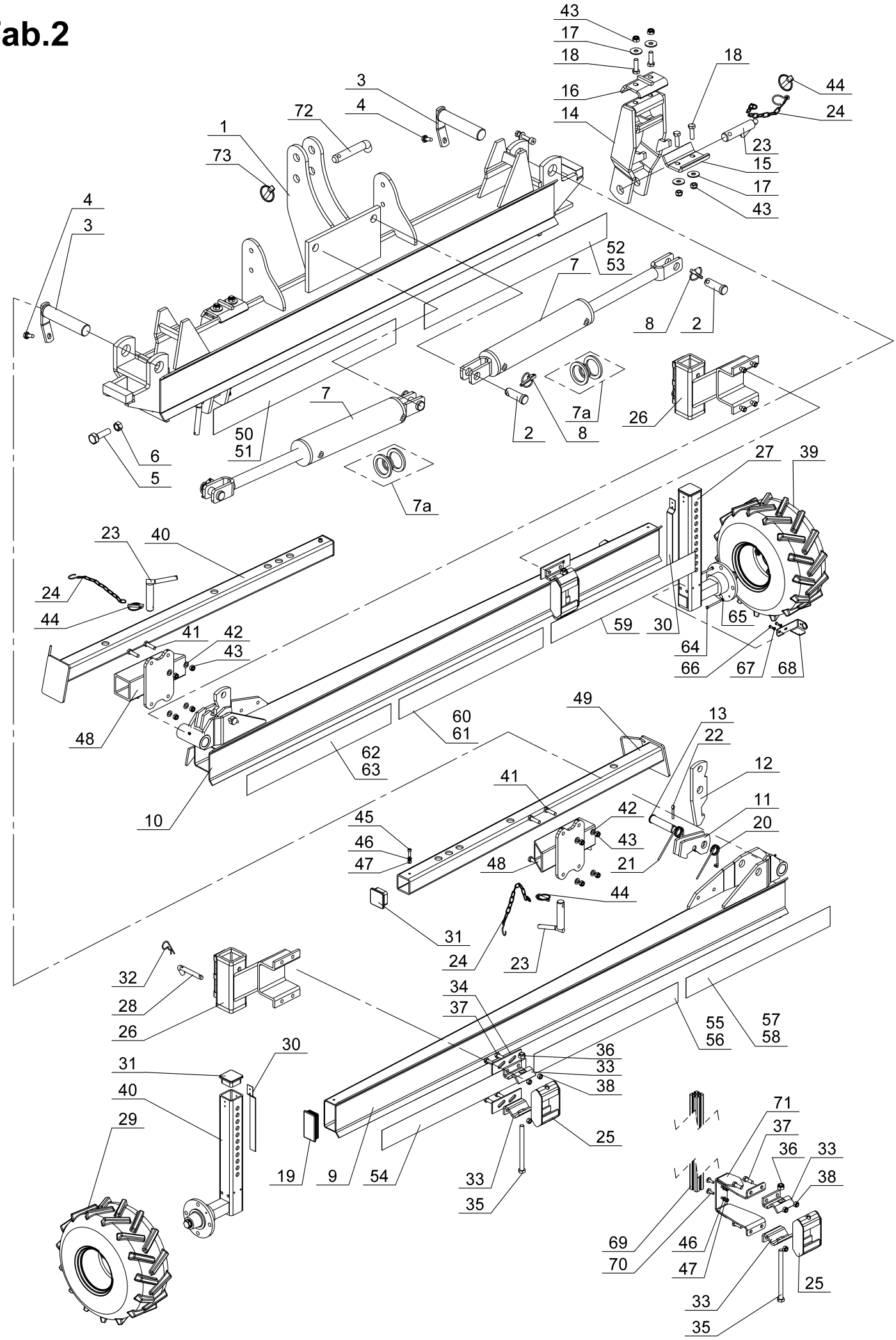
43
17
18
18
16
44
14
24
3
4
72
1
73
23
15
17
43
4
3
52
53
7
8
2
7
7a
26
2
8
50
51
6
5
7a
27
39
23
40
24
44
41
42
43
59
30
65
64
66
67
68
48
60
61
49
13
22
62
63
12
41
10
42
11
45
43
20
46
47
48
21
44
31
24
23
32
28
26
34
37
55
56
57
58
36
33
38
30
31
40
29
25
71
37
36
33
38
19
9
54
33
35
69
70
46
47
25
33
35

Tab.2

Fig.	Serial no.	Part no.	Quantity	Description
65		300315020	2	Nut M6 ISO 4032
66		300304201	2	Bolt M6x12 8.8 FZB ISO 4017
67		300332038	2	Washer M6 ISO 7091
68		300007673	1	Bracket for speed sensor
69		300007795	1	Aluminium profile 1000 mm
70		300008388	2	Special bolt
71		300400900	1	Camera bracket
72		105000388	1	Top link pin
73		300323046	1	Linch pin

Tab.3

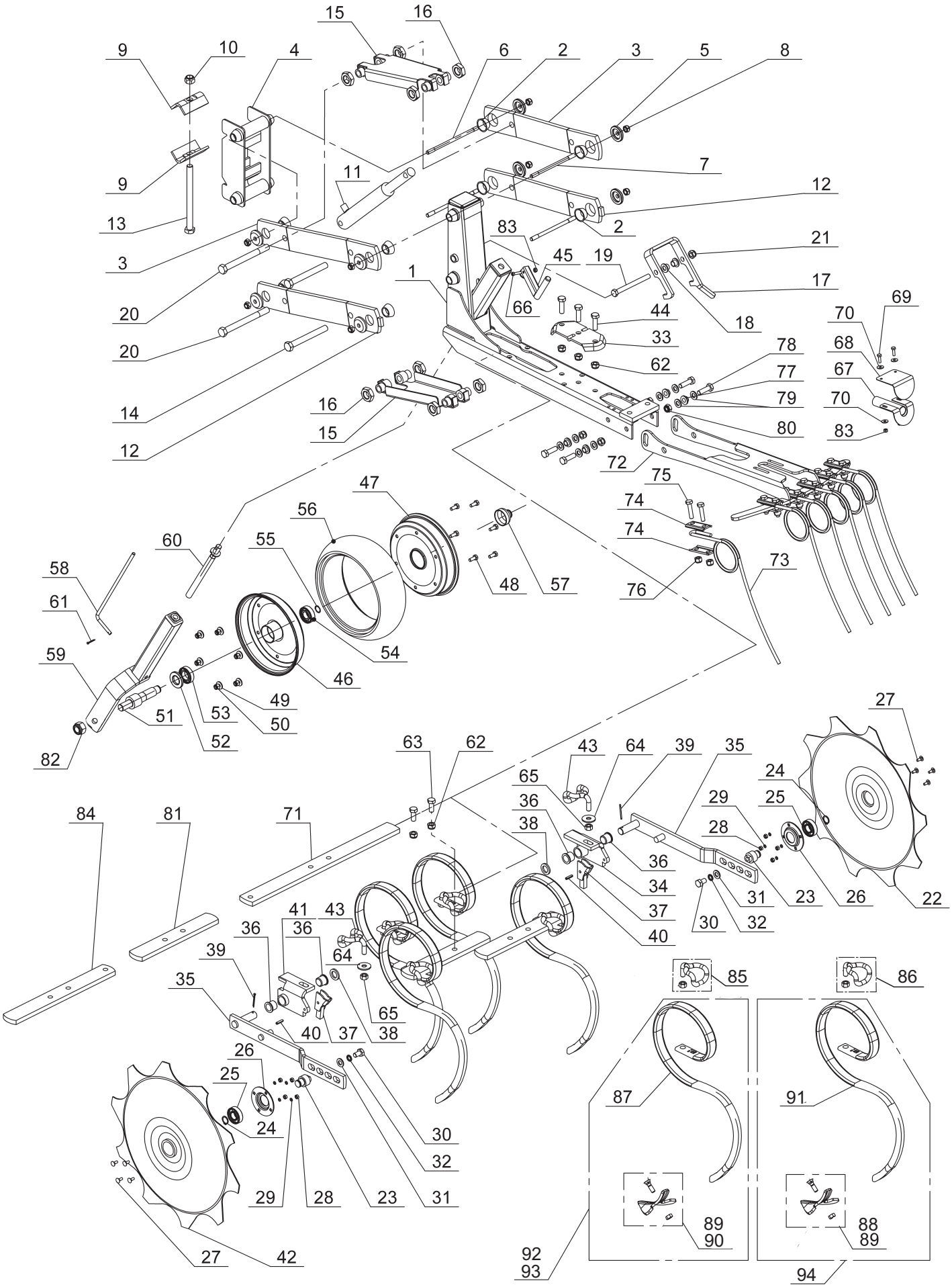
15
16
9
10
4
6
2
3
5
8
7
9
11
12
13
2
83
21
3
45
19
1
17
66
44
69
20
18
70
33
68
20
78
62
77
67
14
16
79
70
15
80
83
12
72
75
47
74
56
74
60
55
73
58
48
57
76
61
54
59
46
49
51
53
50
27
52
82
63
62
43
64
39
35
65
24
84
81
71
36
29
25
38
28
36
34
31
23
26
22
37
30
32
40
41
43
36
36
64
39
35
85
86
65
40
37
38
26
25
87
91
24
30
32
29
28
23
31
89
90
88
89
27
42
92
93
94

Tab.3

Fig.	Serial no.	Part no.	Quantity	Description
1		300007463	1	Parallelogram frame
2		101017502	8	Conical bush
3		300007666	2	Arm parallelogram VCO
4		300357100	1	Section bracket
5		300007466	8	Washer with undercut
6		300007481	2	Stud bolt M10x195
7		300007482	2	Stud bolt M10x170
8		300316020	8	Nut M10 FZB ISO 10511
9		300007479	2	Overlay the VCO
10		300316023	5	Nut M16 ISO 10511
11		310007136	1	Hydraulic cylinder
12		300375800	2	Arm parallelogram VCO with lock
13		100306127	1	Bolt M16x200 8.8 FZB ISO 4014
14		100306095	2	Bolt M16x140 8.8 ISO 4014
15		300361501	2	Parallelogram reinforcement
16		71307124020	8	Nut M24x1,5 DIN936
17		300007664	1	Lock for working section
18		100402031	2	Bearing
19		300304021	1	Bolt M12x130 8.8 FZB ISO4014
20		300304250	2	Bolt M16x170 8.8 FZB ISO4014
21		300316021	1	Nut M12 ISO 10511
22		101016156	1	Rolling shield - right
23		101016225	2	Disc axle
24		100407011	2	External circlip DIN 471
25		300401017	2	Bearing 6204 2RS
26		101017270	2	Bearing cover
27		100311000	8	Bolt M6x15 ISO 8677
28		300315017	8	Nut M6 ISO 4032
29		100332002	8	Washer M6 FZB DIN 6789 A
30		300304054	2	Bolt M12x20 8.8 FZB ISO 4017
31		300332044	2	Washer M12 FZB DIN 9021
32		100332005	2	Washer M12 FZB DIN 6789 A
33		101019085	1	Clamp
34		101016203	1	Holder right
35		101016205	2	Lever for rolling shield
36		101017013	4	Bush
37		101016157	2	Locking pawl
38		100331009	2	Washer M20
39		100333009	2	Split pin
40		300323028	2	Spring pin 6x24 FZB ISO 8752
41		101016204	1	Holder left
42		101016155		Rolling shield - left
43		101000813	2	Clamp
44		300304058	3	Bolt M12x40 8.8 FZB ISO 4017
45		101016357	1	Crank
46		100423017	1	Rim part
47		100423016	1	Rim part
48		300304152	6	Bolt M8x16 8.8 FZB ISO 4017
49		7000602447	6	Washer M8 FZB DIN9021
50		300316027	6	Nut M8 8.8 FZB ISO 10511
51		100423015	1	Axle
52		100413014	1	Seal cover Z-005
53		100401000	1	Bearing 6005
54		100401007	1	Bearing 6204
55		100407011	1	External circlip DIN 471
56		101019111	1	Tyre
57		101020196	1	Wheel axle cap
58		101017514	1	Scale
59		101017510	1	Wheel frame
60		101017503	1	Wheel spindle
61		100333001	1	Split pin 3x20 FZB ISO 1234
62		300316021	5	Nut M12 ISO 10511
63		300304057	2	Bolt M12 x 35 8.8 FZB ISO 4017
64		300332008	2	Washer M12 FZB ISO 7089

Tab.3

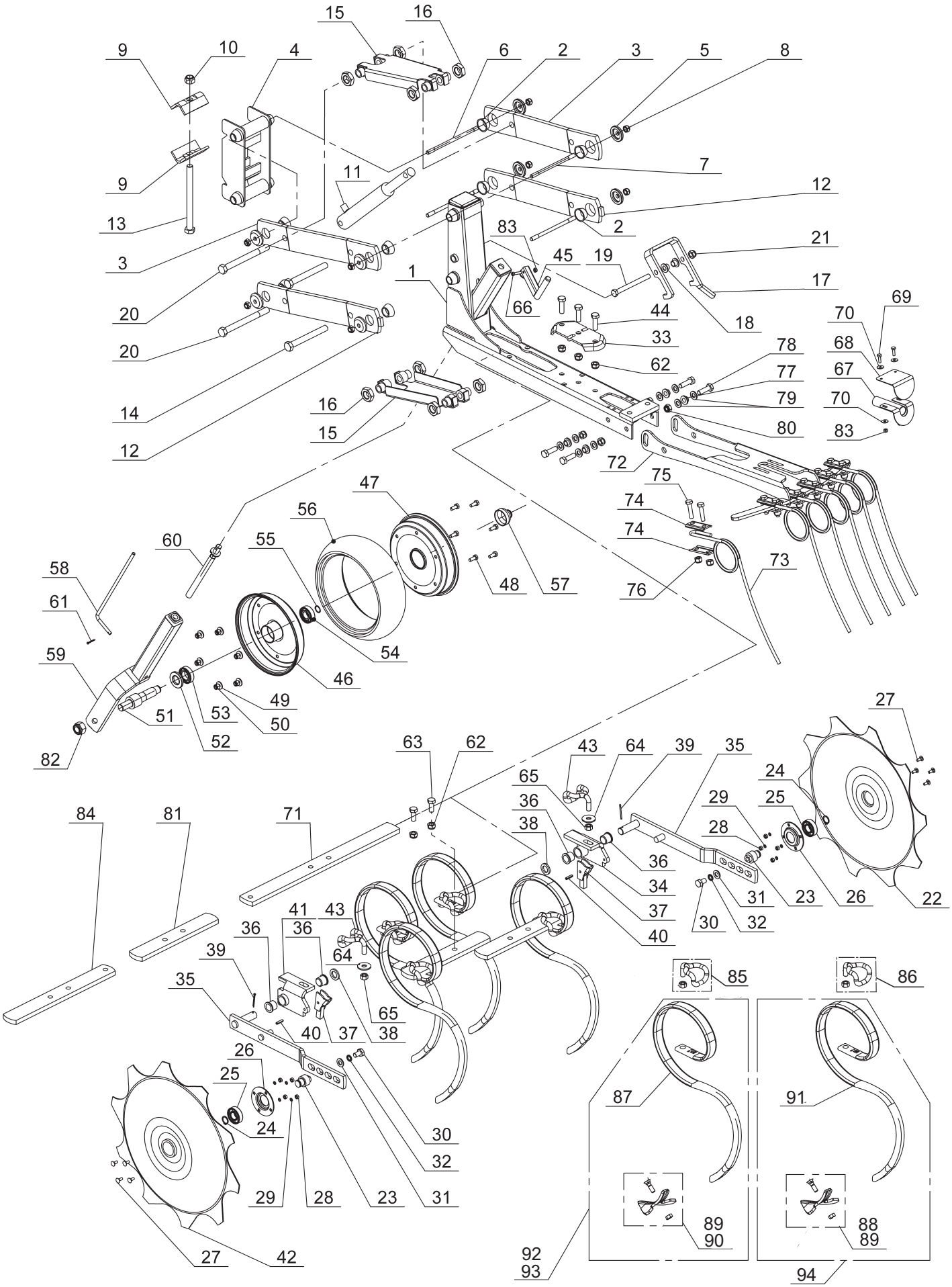
15
16
9
10
4
6
2
3
5
8
7
9
11
12
13
2
83
21
3
45
19
1
17
66
44
69
20
18
70
33
68
20
78
62
77
67
14
16
79
70
15
80
83
12
72
75
47
74
56
74
60
55
73
58
48
57
76
61
54
59
46
49
51
53
50
27
52
82
63
62
43
64
39
35
65
24
36
29
25
84
81
71
38
28
36
34
31
23
26
22
37
30
32
40
41
43
36
36
64
39
35
85
86
65
40
37
38
26
25
87
91
24
30
32
29
28
23
31
89
90
88
89
27
42
92
93
94

Tab.3

Fig.	Serial no.	Part no.	Quantity	Description
65		300315003	4	Nut M12 ISO 4032
66		100321017	1	Screw M6x25 FZB ISO 7045
67		372348600	1	Spreader plate
68		372007095	1	Spreader plate outside
69		300304135	2	Bolt M6x20 8.8 ISO 4017
70		300332052	4	Washer M6 FZB DIN 9021
71		101016209	1	Flat bar with holes L=580 mm
72		300363200	1	Rear harrow body (75cm)
73		300007483	6	Rear harrow tine-VCO
74		300033389	12	Tension plate
75		300304037	12	Bolt M10x45 8.8 FZB ISO 4017
76		300316020	12	Nut M10 ISO 10511
77		300007527	4	Rear harrow bush
78		300304058	4	Bolt M12 x 35 8.8 FZB ISO 4017
79		300332008	8	Washer M12 FZB ISO 7089
80		300316021	4	Nut M12 ISO 10511
81		101017342	1	Flat bar with holes L=310 mm
82		300316016	1	Nut M20 ISO 10511
83		300316026	3	Nut M6 ISO 10511
84		101016208	1	Flat bar with holes L=400 mm
85		101000742	1	Tine clamp 32x12 with nut
86		101000507	1	Tine clamp 32x10 with nut
87		101000766	1	VCO - tine
88		101000644	1	Share 105x4 + bolt and nut
89		101019785	1	Share 135x3 + bolt and nut
90		101019786	1	Share 200x3 + bolt and nut
91		101000012	1	S-tine
92		101000760	1	Cpl. VCO - tine with share 135x3
93		101000761	1	Cpl. VCO - tine with share 200x3
94		101000600	1	Cpl. S-tine with share 135x3

Tab. 4

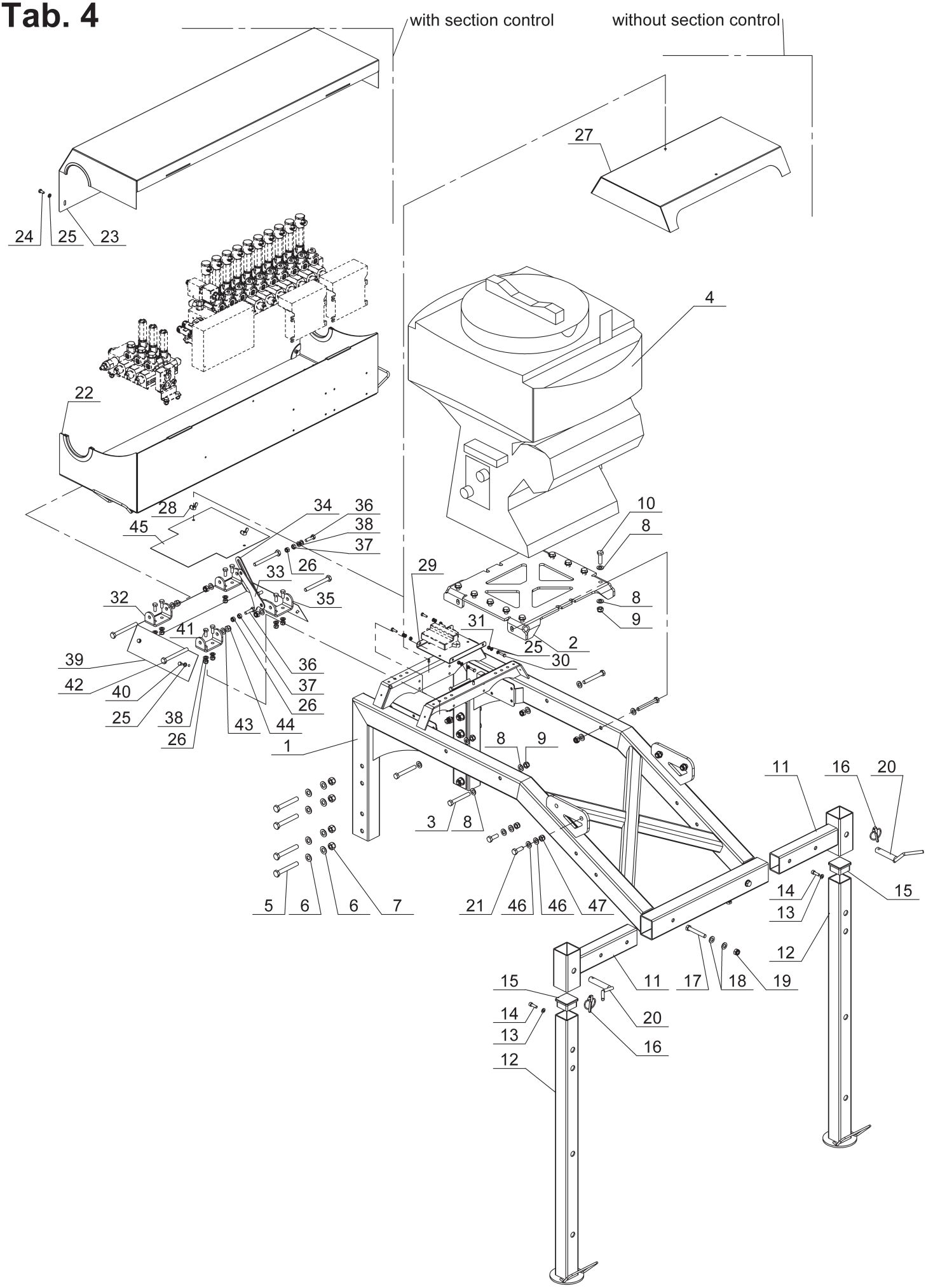
with section control
without section control
27
24
25
23
4
22
28
45
34
36
38
37
26
33
35
32
41
39
42
40
25
38
26
43
44
36
37
26
1
29
31
25
30
10
8
8
9
2
8
9
3
8
5
6
6
7
21
46
46
47
11
16
20
14
13
15
12
11
17
18
19
15
14
13
12
20
16

Tab.4

Fig.	Serial no.	Part no.	Quantity	Description
1		300390900	1	Platform welded
2		372007098	1	Link
3		300304021	4	Bolt M12x130 8.8 FZB ISO 4014
4		372350900	1	Pneumatic drill PS 120 M1 control box 3.2
5		71301614105	8	Bolt M14x100 8.8 FZB ISO 4014
6		300332032	16	Washer M14 ISO 7091
7		300316031	9	Nut M14 ISO 10511
8		300332008	28	Washer M12 FZB ISO 7091
9		300316021	14	Nut M12 ISO 10511
10		300304058	10	Bolt M12 x 40 8.8 FZB ISO 4017
11		300391400	2	Leg holder
12		300391500	2	Parking leg
13		300332039	2	Washer M8 FZB ISO 7091
14		7000521527	2	Bolt M8x25 8.8 FZB ISO 4762
15		71208044510	2	Tube cap 60x60x3
16		100333014	2	Linch pin
17		300304066	2	Bolt M12x50 8.8 FZB ISO 4014
18		300332008	2	Washer M12 FZB ISO 7091
19		300316021	1	Nut M12 ISO 10511
20		7210000146	1	Pin
21		300304057	4	Bolt M14x40 8.8 FZB ISO 4014
22		300399900	1	Bottom box
23		300399700	1	Hydraulic cover
24		7000586214	2	Bolt M6x14 ISO 4017
25		300332038	13	Washer M6 ISO 7091
26		300316027	19	Nut M8 ISO 10511
27		300398300	1	Hydraulic cover
28		300316036	2	Nut M6 DIN 315
29		300008318	1	Fixing the controller
30		300304135	4	Bolt M6x20 8.8 ISO 4017
31		300316026	4	Nut M6 ISO 10511
32		300008357	3	Bottom hinge
33		300008359	1	Bottom lock
34		300008358	1	Top lock
35		300008361	1	Special hinge
36		74301208300	3	Bolt M8x30 8.8 ISO 4014
37		300315018	3	Nut M8 ISO 4032
38		300332039	9	Washer M8 ISO 7091
39		300008356	1	U-cover
40		300304138	4	Bolt M6x10 8.8 ISO 4017
41		300304153	8	Bolt M8x20 8.8 ISO 4017
42		300304027	4	Bolt M10x100 ISO 4014
43		300332027	4	Washer M10 ISO 7091
44		300316020	5	Nut M10 ISO 10511
45		300008362	1	Cover plate
46		300332032	8	Washer M14 ISO 7091
47		300316031	4	Nut M14 ISO 10511

Tab. 5

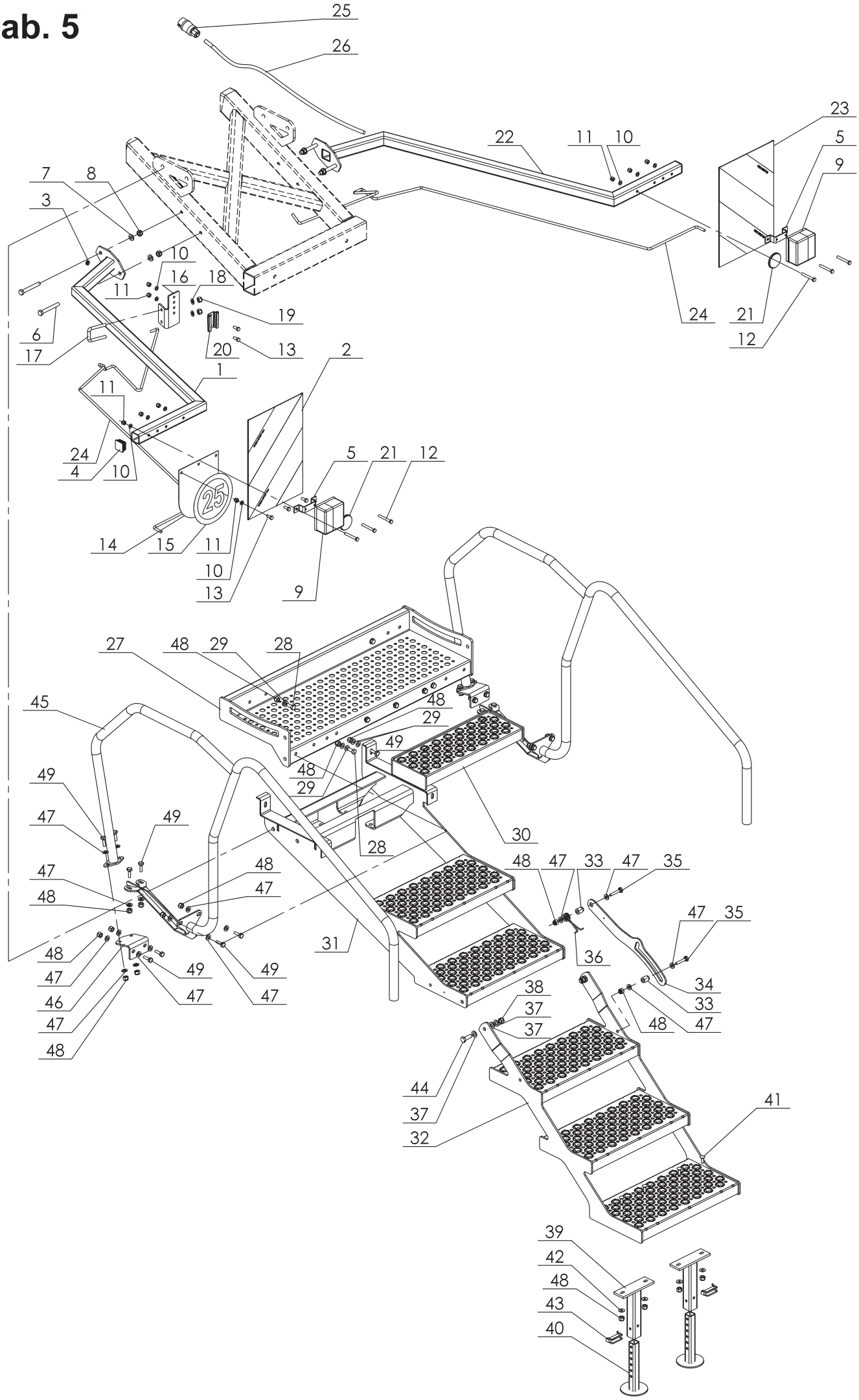
25
26
23
22
11
10
5
9
7
8
3
10
16
18
11
19
6
17
20
13
24
21
12
2
1
11
24
4
10
5
21
12
25
14
15
11
10
13
9
27
48
29
28
45
48
29
49
48
29
49
47
49
28
30
47
48
48
47
48
47
33
47
35
47
35
31
36
48
47
46
47
48
49
47
49
47
34
33
38
37
37
48
47
44
37
32
41
39
42
48
43
40

Tab.5

Fig.	Serial no.	Part no.	Quantity	Description
1		300394700	1	Light bracket - left
2		300167700	1	Warning plate - left
3		7000603014	2	Wire eyelet
4		300082634	2	Tube's cap
5		300004569	2	Rear lamp bracket
6		300304021	4	Bolt M12x130 8.8 FZB ISO 4014
7		300332008	4	Washer M12 FZB ISO 7089
8		300316021	4	Nut M12 ISO 10511
9		7000603318	2	Rear light
10		300332039	11	Washer M8 FZB ISO 7089
11		300316027	11	Nut M8 FZB ISO 10511
12		300304162	6	Bolt M8x70 8.8 FZB ISO 4014
13		300304152	5	Bolt M8x16 8.8 FZB ISO 4017
14		300008272	1	Label's bracket
15		300008277	1	Label - speed limit 25
16		300008273	1	Bracket for triangle
17		300008282	1	U-bolt M10
18		7000026757	2	Washer 18/ 10,5 /2
19		300316020	2	Nut M10 FZB ISO 10511
20		300008276	1	Handle for tables - painted
21		300008284	2	Reflective light - red
22		300394800	1	Light bracket - right
23		300167800	1	Warning plate - right
24		300008274	2	Electric wire 4x0,75
25		7000018142	1	Plug socket
26		300007727	1	Electric wire 7x0,75
27		300390200	1	Platform's step welded
28		300304032	4	Bolt M10x25 ISO 4017
29		7000026757	16	Washer 18/10,5 /2
30		372355500	1	Single step
31		300390400	1	Platform welded
32		300390500	1	Steps welded
33		370006173	2	Bushing L=26
34		300006929	1	Locking arm
35		300304037	2	Bolt M10x45 8.8 FZB ISO 4017
36		370006232	1	Locking arm spring
37		300332008	6	Washer M12 FZB ISO 7089
38		300316021	2	Nut M12 ISO 10511
39		7002153795	2	Outside f. supporting base
40		7002153793	2	Supporting base
41		300304191	4	Bolt M8x25 8.8 FZB ISO 8677
42		7000602447	4	Washer M8 FZB DIN9021
43		7000036676	2	Pin
44		300304057	2	Bolt M12 x 35 8.8 FZB ISO 4017
45		300390300	2	Handrail welded
46		300390800	2	Welded bracket
47		300332027	32	Washer M10 FZB ISO 7089
48		300316020	30	But M10 ISO 10511
49		300304034	20	Bolt M10x30 8.8 FZB ISO 4017

Tab.6

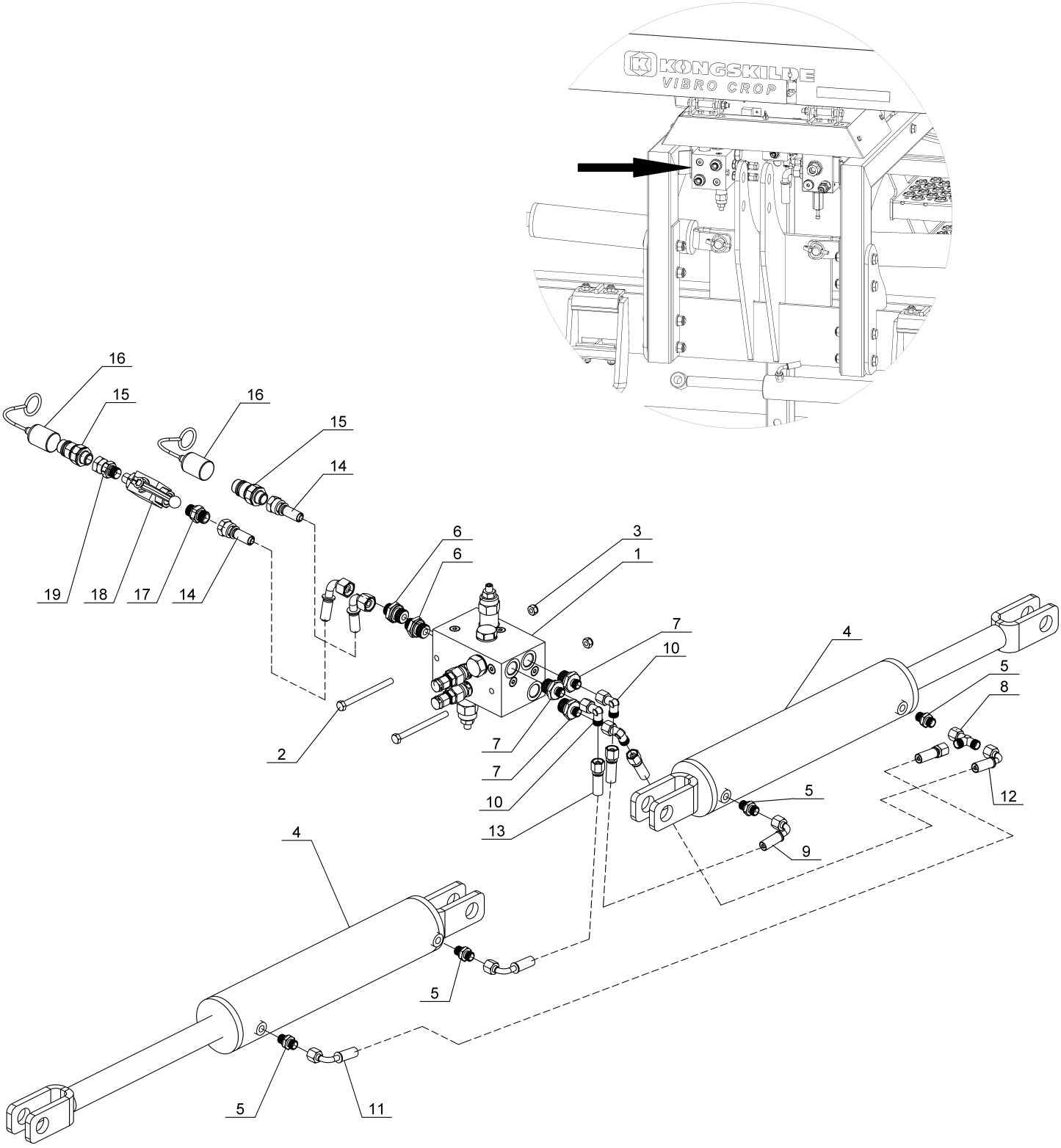
KONGSKILDE
VIBRO CROP
16
15
16
15
14
6
6
3
1
19
18
17
14
7
10
4
5
8
2
7
7
10
13
5
12
9
4
5
5
11

Tab.6

Fig.	Serial no.	Part no.	Quantity	Description
1		300008254	1	Hydraulic custom folding block
2		7000540493	2	Bolt ISO M8x100 8.8 FZB ISO 4014
3		300316027	2	Nut M8 FZB ISO 10511
4		101000456	2	Hydraulic cylinder
5		300007773	4	Adapter 1/4"/M14x1,5
6		300007689	2	Adapter 1/2"/M18x1,5
7		300008303	3	Adapter 1/2"/M14x1,5
8		300008314	1	Hydraulic coupling - T
9		300008309	1	Hydraulic hose L=250, M14x1,5
10		300007696	3	Hydraulic coupling - L
11		300008307	1	Hydraulic hose L=1160, M14x1,5
12		300008308	1	Hydraulic hose L=550, M14x1,5
13		300008306	1	Hydraulic hose L=440, M14x1,5
14		300008305	2	Hydraulic hose L=2500, M18x1,5
15		7210000125	2	Quick coupling
16		7000600399	2	Dust cap
17		71202079060	1	Coupling 3/8"
18		500257617	1	Ball valve
19		7210000128	1	Coupling

Tab.7

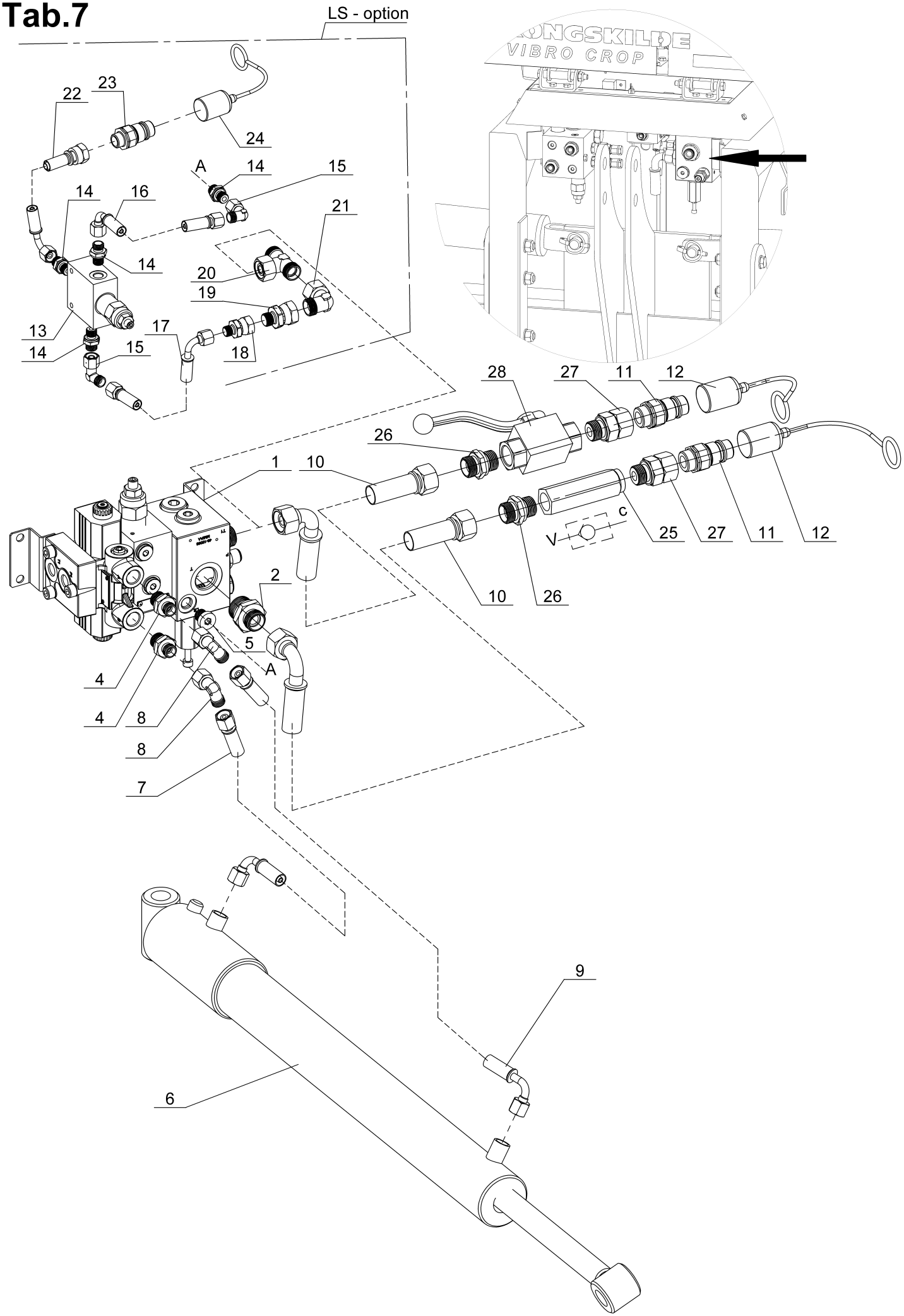
LS - option
VIBRO CROP
22
23
24
A
14
15
14
16
21
14
20
19
13
17
14
15
18
28
27
11
12
26
1
10
c
V
25
27
11
12
10
26
2
5
A
4
4
8
8
7
9
6

Tab.7

Fig.	Serial no.	Part no.	Quantity	Description
1		300008255	1	Hydraulic master block - side shift
2		300008319	2	Adapter 3/4"/M22x1,5
4		300007695	2	Adapter 3/8"/M14x1,5
5		300007772	1	Plug 1/4"
6		300008266	1	Hydraulic cylinder - side shift
7		300007694	1	Hydraulic hose L=1500, M14x1,5
8		300007696	2	Hydraulic coupling L M14x1,5
9		300007693	1	Hydraulic hose L=1000, M14x1,5
10		300008321	2	Hydraulic hose L=2500, M22x1,5
11		300008320	2	Coupling M22x1,5
12		7000406140	2	Dust cap
13		300008261	1	LS pressure amplifier
14		300007773	4	Adapter 1/4"/M14x1,5
15		300007696	2	Hydraulic coupling L M14x1,5
16		300008309	1	Hydraulic hose L=250, M14x1,5
17		300008306	1	Hydraulic hose L=440, M14x1,5
18		300008384	1	Coupling
19		300008385	1	Coupling
20		300008370	1	Coupling T, M22x1,5
21		300008371	1	Coupling L, M22x1,5
22		300008375	1	Hydraulic hose L=2800, M14x1,5/M18x1,5
23		7210000125	1	Quick coupling
24		7000600400	1	Dust cap
25		300008387	1	Return valve
26		300008369	2	Adapter 1/2"/M22x1,5
27		300007688	2	Adapter 1/2"/M22x1,5
28		300008386	1	Ball valve

Tab.8

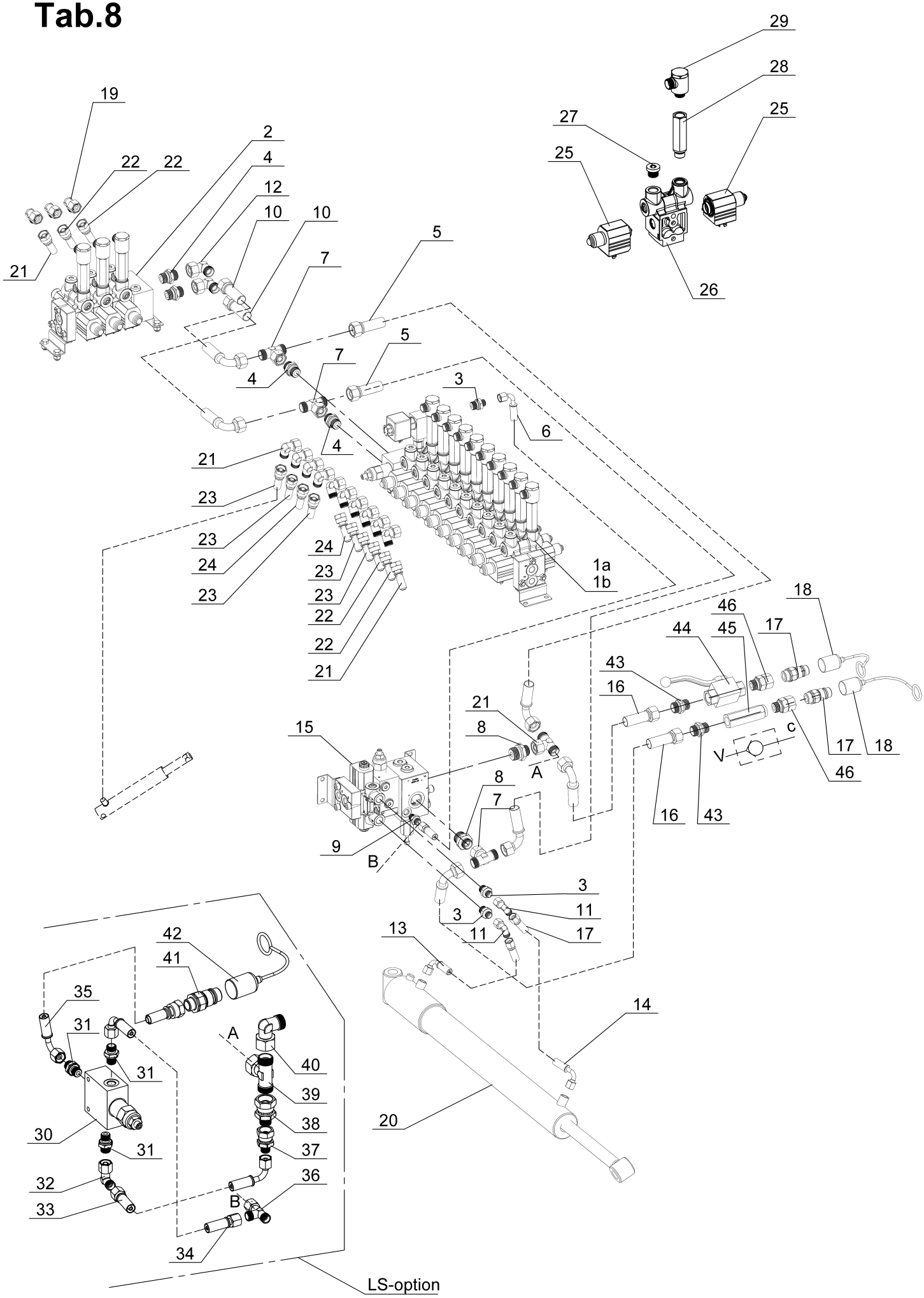
29
28
27
25
25
26
19
22
22
21
2
4
12
10
10
7
5
5
7
4
3
6
4
21
23
23
24
23
24
23
23
22
22
21
1a
1b
18
46
44
45
17
43
16
21
8
15
A
8
7
9
B
c
V
17
18
46
16
43
3
11
3
11
17
13
14
20
42
41
35
31
A
40
31
39
38
30
31
37
32
36
33
B
34
LS-option

Tab.8

Fig.	Serial no.	Part no.	Quantity	Description
1a		300400500	1	Hydraulic block 10 - sections (fittings)
1b		300400700	1	Hydraulic block 9- sections (fittings)
2		300400600	1	Hydraulic block 3- sections (fittings)
3		300007695	3	Adapter 3/8"/M14x1,5
4		300008369	4	Adapter 1/2"/M22x1,5
5		300008378	2	Hydraulic hose L=600, M22x1,5
6		300008308	1	Hydraulic hose L=550, M14x1,5
7		300008370	4	Hydraulic coupling T, M22x1,5
8		300008319	2	Adapter 3/4"/M22x1,5
9		300007773	1	Adapter 1/4"/M14x1,5
10		300008378	2	Hydraulic hose L=600, M22x1,5
11		300007696	2	Hydraulic coupling L, M14x1,5
12		300008371	2	Hydraulic coupling L, M22x1,5
13		300007694	1	Hydraulic hose L=1500,M14x1,5
14		300007693	1	Hydraulic hose L=1000,M14x1,5
15		300008255	1	Hydraulic master block - for side shift
16		300008321	2	Hydraulic hose L=2500, M22x1,5
17		300008320	2	Quick coupling
18		7000406140	2	Dust cap
19		300000867	13	Hydraulic coupling L,
20		300008266	1	Hydraulic cylinder
21		300008374	2	Hydraulic hose L=3400, M14x1,5/M18x1,5
22		300008375	4	Hydraulic hose L=2800, M14x1,5/M18x1,5
23		300008376	5	Hydraulic hose L=2000, M14x1,5/M18x1,5
24		300008377	1	Hydraulic hose L=1500, M14x1,5/M18x1,5
25		300008381	1	Valve's coil
26		300008382	1	Valve's block
27		300008368	1	Plug 3/8"
28		300008383	1	Speed control valve
29		7000405785	1	Screwed connection
30		300008261	1	LS pressure amplifier
31		300007773	3	Adapter 1/4"/M14x1,5
32		300007696	1	Hydraulic coupling L M14x1,5
33		300008306	1	Hydraulic hose L=440, M14x1,5
34		300008309	1	Hydraulic hose L=250, M14x1,5
35		300008375	1	Hydraulic hose L=2800, M14x1,5/M18x1,5
36		300008314	1	Hydraulic coupling T, M14x1,5
37		300008384	1	Coupling
38		300008385	1	Coupling
39		300008370	1	Hydraulic coupling T, M22x1,5
40		300008371	1	Hydraulic coupling L, M22x1,5
41		7210000125	1	Quick coupling
42		7000600400	1	Dust cap
43		300008369	2	Adapter 1/2"/M22x1,5
44		300008386	1	Ball valve
45		300008387	1	Return valve
46		300007688	2	Hydraulic coupling, 1/2"/M22x1,5

Tab.9
Vision system

1

2

3

4

5

6

7

8

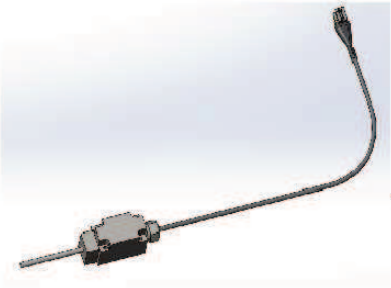
9

10

11

Tab.9

Fig.	Serial no.	Part no.	Quantity	Description
1		300007779	1	Stereo camera
2		300007778	1	Monitor panel
3		300007790	1	Camera box
4		300007791	1	Coiled cable
5		300007793	1	Tractor harness
6		300007794	1	Implement harness
7		300007792	1	CME steering module
8		300007795	1	Aluminium profile L=1000 mm
9		300400300	1	Implement sensor
10		300007797	1	Placement cable
11		300007796	1	Speed sensor

Tab.10

9 sections control (Trimble)

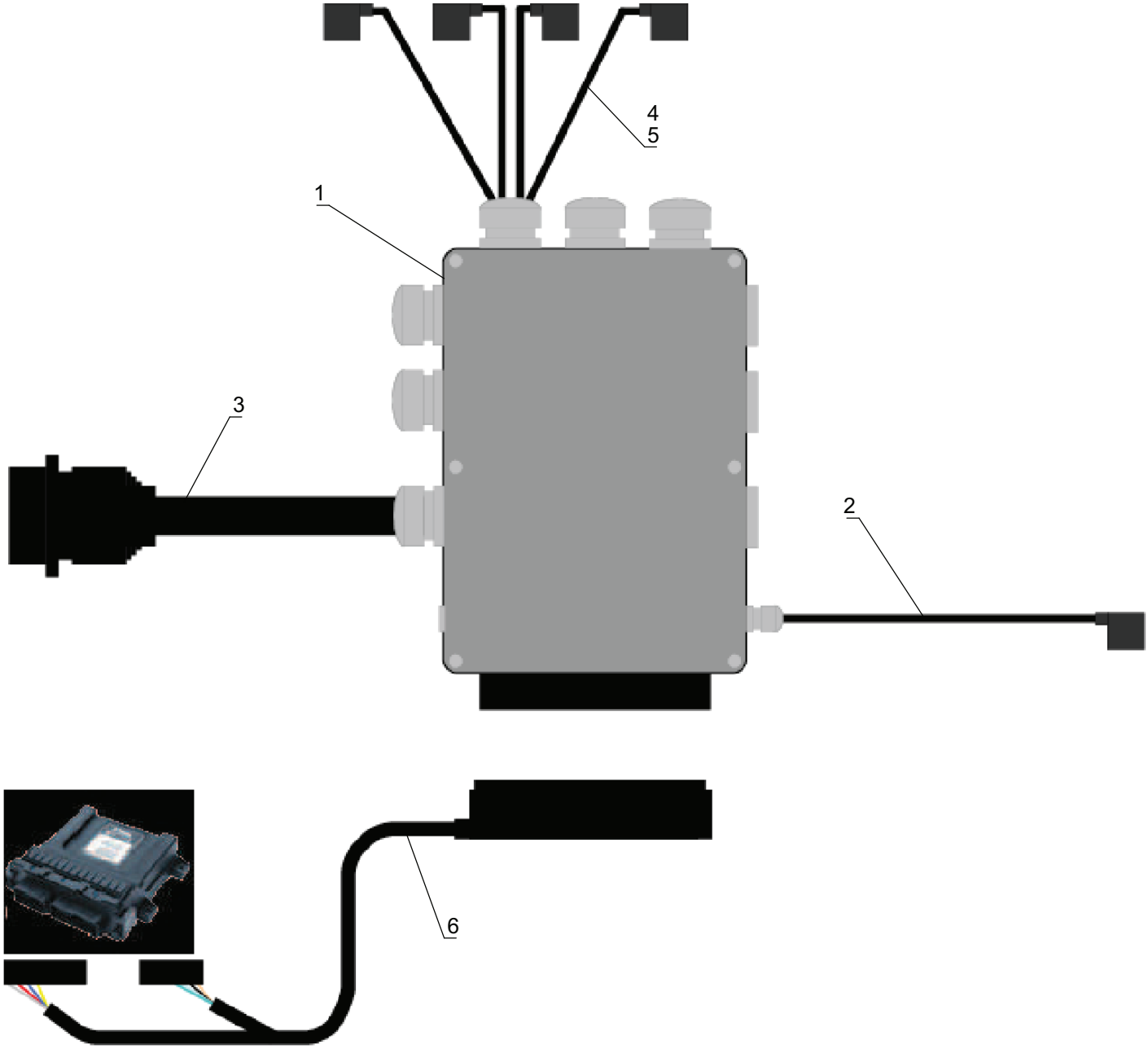

Tab.10

Fig.	Serial no.	Part no.	Quantity	Description
1		300007571	1	Control box
2		300008302	1	Bypass valve cable
3		300007576	1	Isobus cable
4		300008372	1	Cable for 2 valves
5		300008373	4	Cable for 4 valves
6		300007753	1	Converter cable for 1 Trimble box

Tab.11
9 sections control (Topcon and AG-leader)

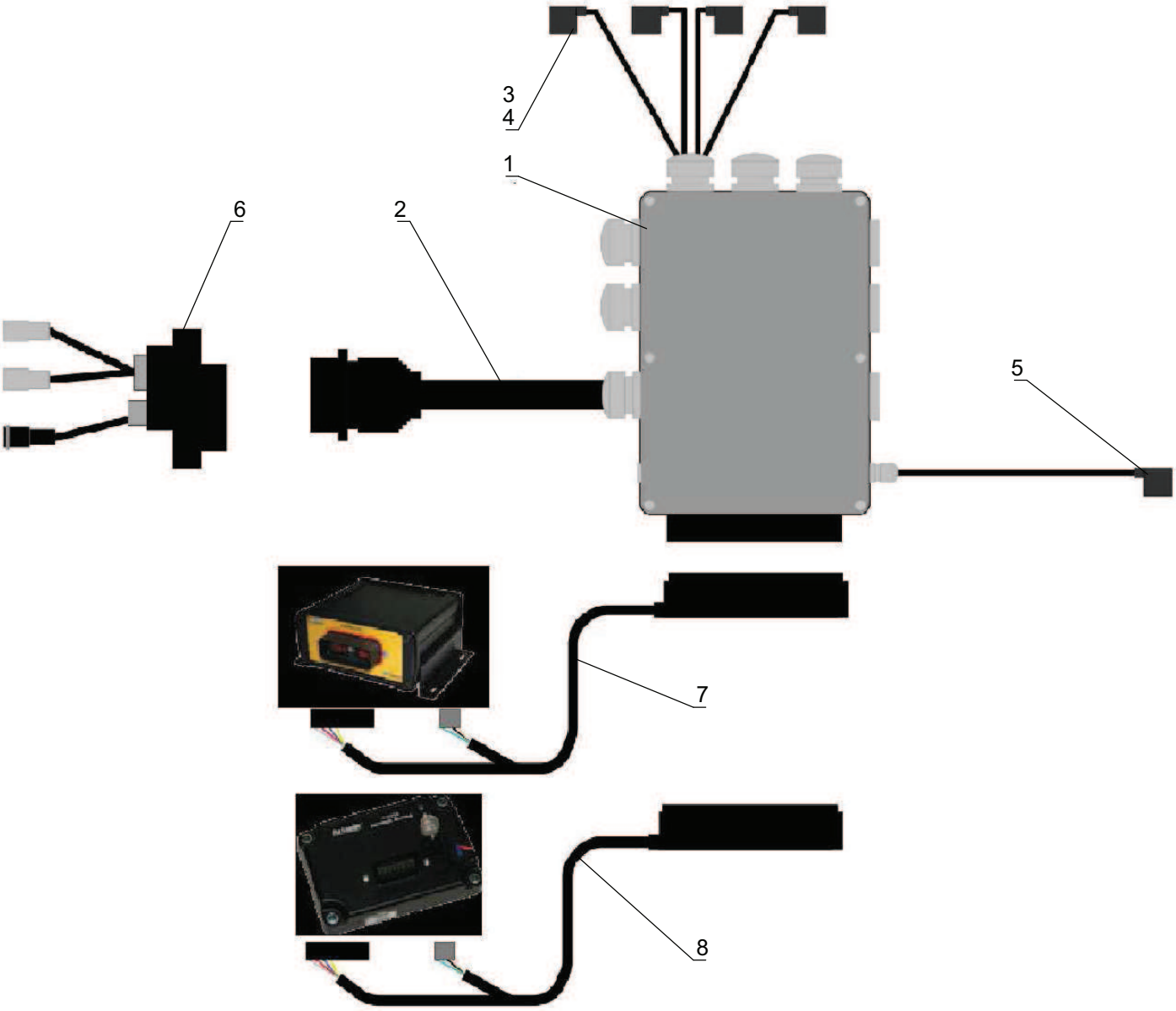

Tab.11

Fig.	Serial no.	Part no.	Quantity	Description
1		300008205	1	Junction box
2		300007576	1	Isobus cable
3		300008372	1	Cable for 2 valves
4		300008373	4	Cable for 4 valves
5		300008302	1	Bypass valve cable
6		300008202	1	ISOBUS tractor side connector with harness
7		300007751	1	Converter Cable for 1 TopCon box (10 sections)
8		300007750	1	Converter Cable for 1 Agleader box (12 sections)

Tab.12
13 sections control (Trimble)

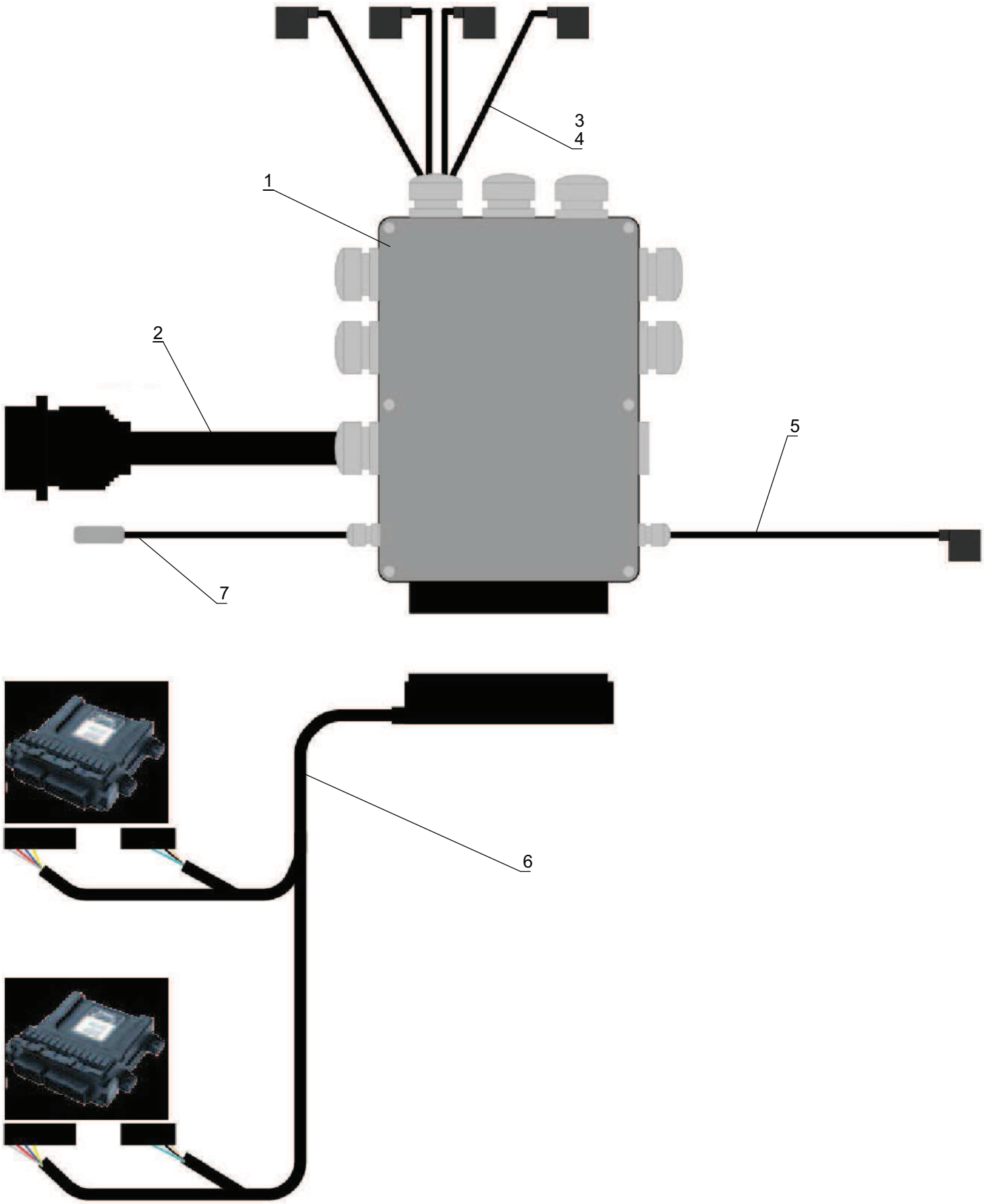

Tab.12

Fig.	Serial no.	Part no.	Quantity	Description
1		300008205	1	Junction box
2		300007576	1	Isobus cable
3		300008372	1	Cable for 2 valves
4		300008373	6	Cable for 4 valves
5		300008302	1	Bypass valve cable
6		300007575	1	Converter Cable for 2 Trimble boxes (24 sections)
7		310000007	1	Lift sensor

Tab.13
13 sections control (Agleader and Topcon)

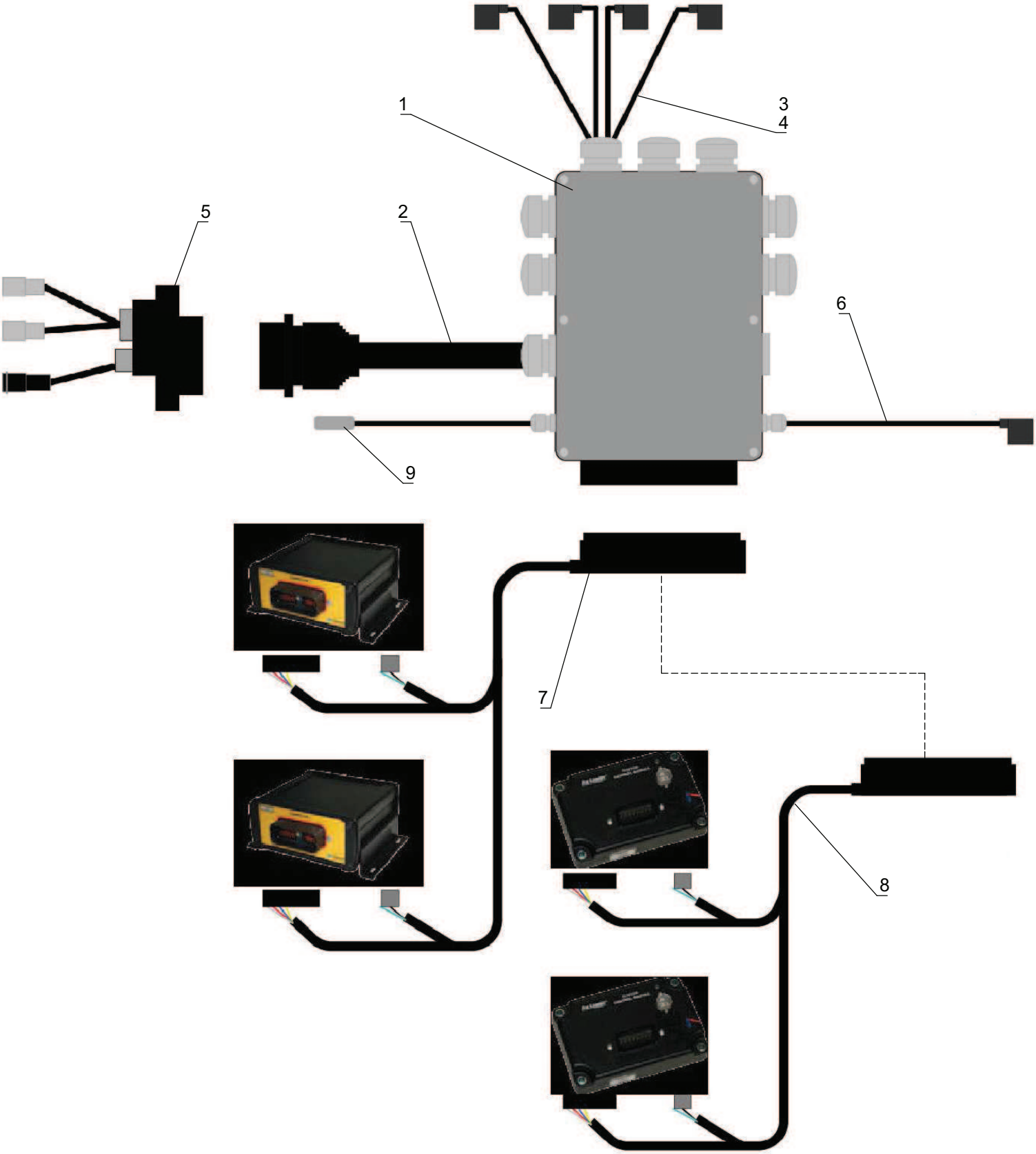

Tab.13

Fig.	Serial no.	Part no.	Quantity	Description
1		300007571	1	Control box
2		300007576	1	Isobus cable
3		300008372	1	Cable for 2 valves
4		300008373	6	Cablefor 4 valves
5		300008202	1	ISOBUS tractor side connector with harness
6		300008302	1	Bypass valve cable
7		300008203	1	Converter Cable for 2 TopCon boxes (20 sections)
8		300008204	1	Converter Cable for 2 Agleader boxes (24 sections)

Valid from serial number: I Gültig ab Seriennummer:

Valable á partir de numéro de série: I Gyldig fra serienummer:

401400824

300 501 309 - 25.03.2014

adding value
to the green world

You can always find the latest version of the manuals at www.kongskilde.com