Vibro Crop/
Vibro Crop Intelli

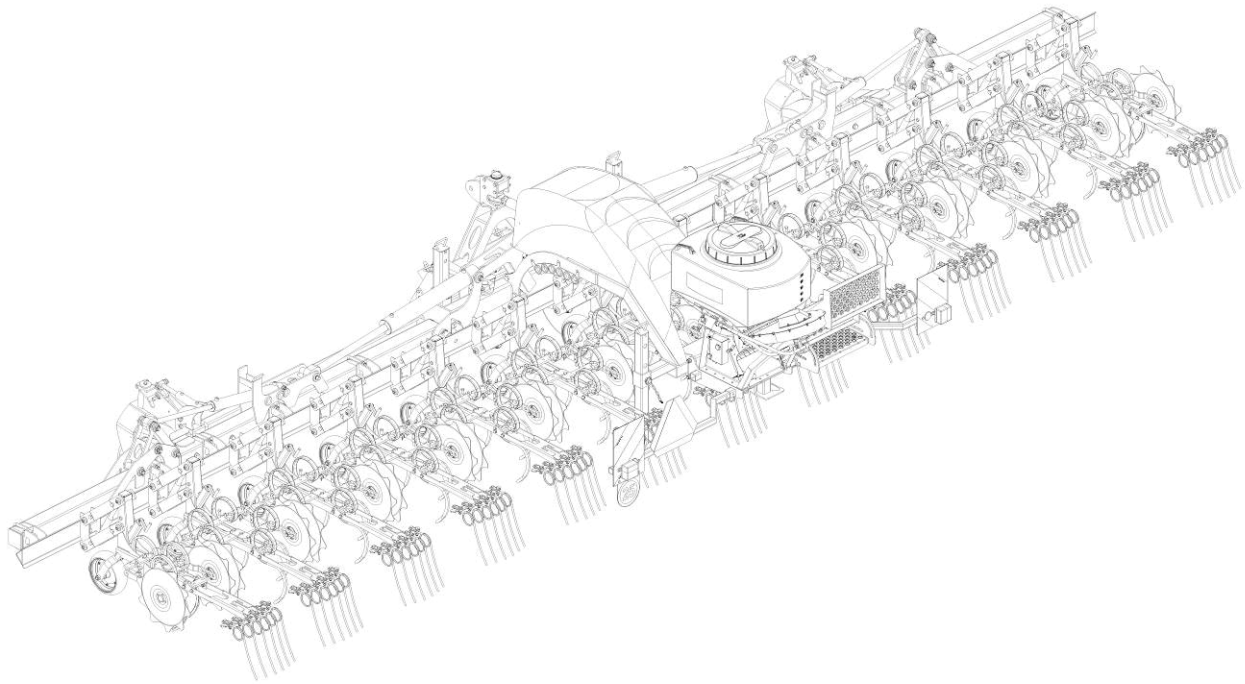

Serial No. 303 090 002

dated 24.11.2015

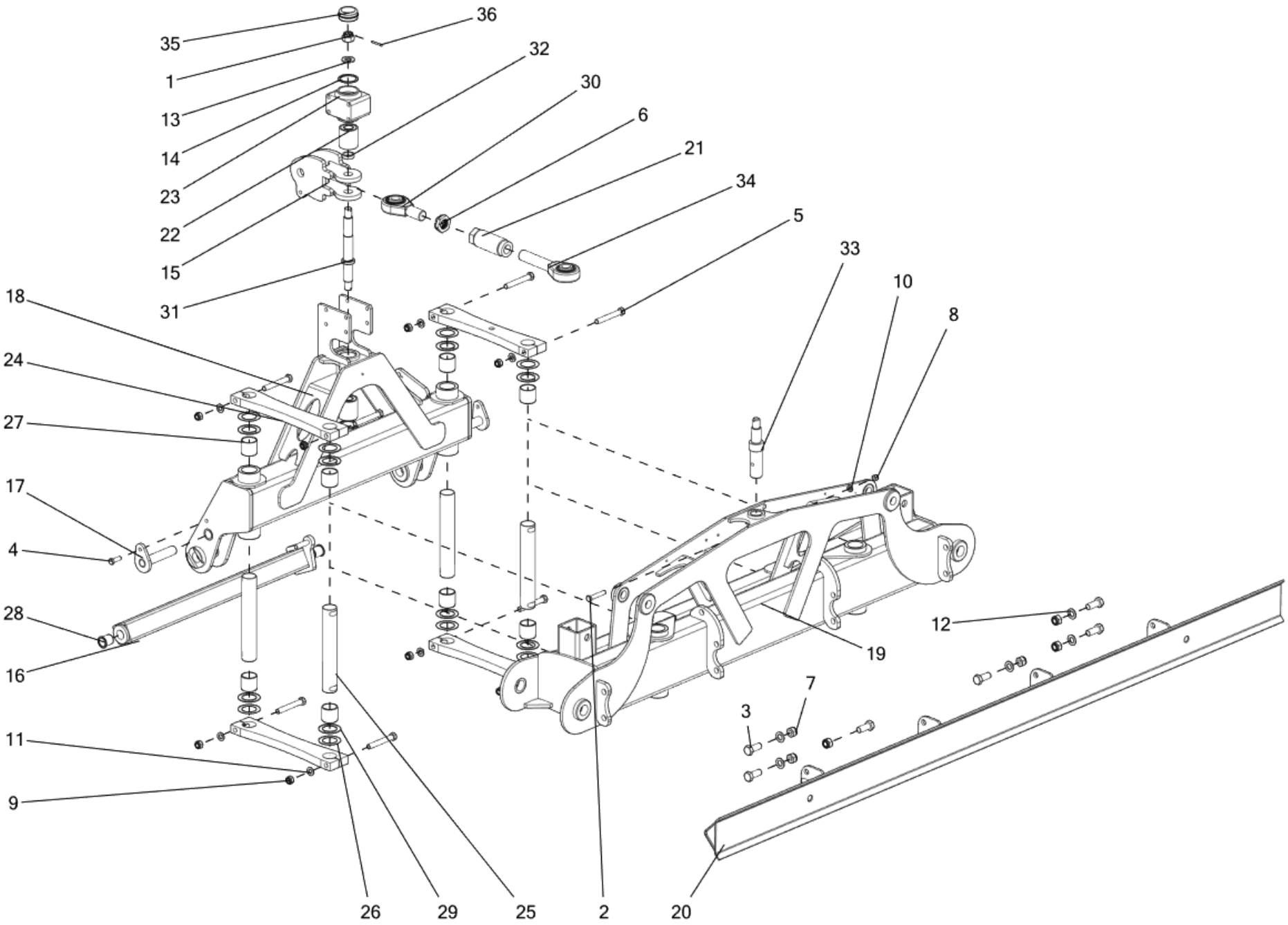
36
35
32
1
30
13
6
14
21
23
34
22
5
15
33
31
10
18
8
24
27
17
4
28
12
19
16
7
3
11
9
26
29
25
2
20

Fig.	Serial no.	Part no.	Quantity	Description **Tab.1.**
1		100316062	1	CROWNNUT M24X2 ELGV.
2		300304065	1	Bolt M12x75 8.8 FZB DIN931
3		300304106	6	BOLT M20X50-8.8 8.8
4		300304292	2	BOLT M12x40 le 8.8 FZB DIN933
5		300304304	8	Bolt M16x120 10.9 FZB DIN931
6		300315024	1	Castle nut M36x3 cl.8 FZB DIN 937
7		300316016	6	Lock nut M20 Fe/Zn5
8		300316021	3	Lock nut M12 cl.8 FZB DIN985
9		300316023	8	Lock nut M16 cl.8 FZB DIN985
10		300332008	3	Washer M12 FZB DIN126
11		300332009	8	Washer M16 FZB DIN126
12		300332034	5	Washer M20 FZB DIN126
13		300332035	1	Washer M24 FE/ZN5 DIN126
14		300407024	2	Circlip W65 DIN472
15		303010012	1	Top link connection
16		303011007	1	Front disc bar
17		303011009	2	Front bar pin
18		303011010	1	Front central frame
19		303011011	1	Rear central frame
20		303011030	1	Section interface cpl.
21		303011106	1	Double nut
22		303020057	2	Ultra bush
23		303020071	1	Rubber bush housing
24		303021057	4	Paraellelogram arm
25		303021106	4	Parallelogram pin fi50
26		303021108	8	Washer
27		303021207	8	IGUS Q2SM-5055-50 (sleeve bearing)
28		303021209	2	IGUS Q2FM-3034-40 (flange bearing)
29		303021211	8	IGUS GTM-5278-020 (thrust washer)
30		303021222	1	Tie rod cat.3 Ma36x3 right
31		303021223	1	Shaft
32		303021226	1	Bush
33		303021227	1	Pin bolt
34		303021272	1	Tier rod cat.3 M36x3 left thread
35		600473006	1	Dust cap D-5000
36		100333009	1	3,2 X 35 PIN

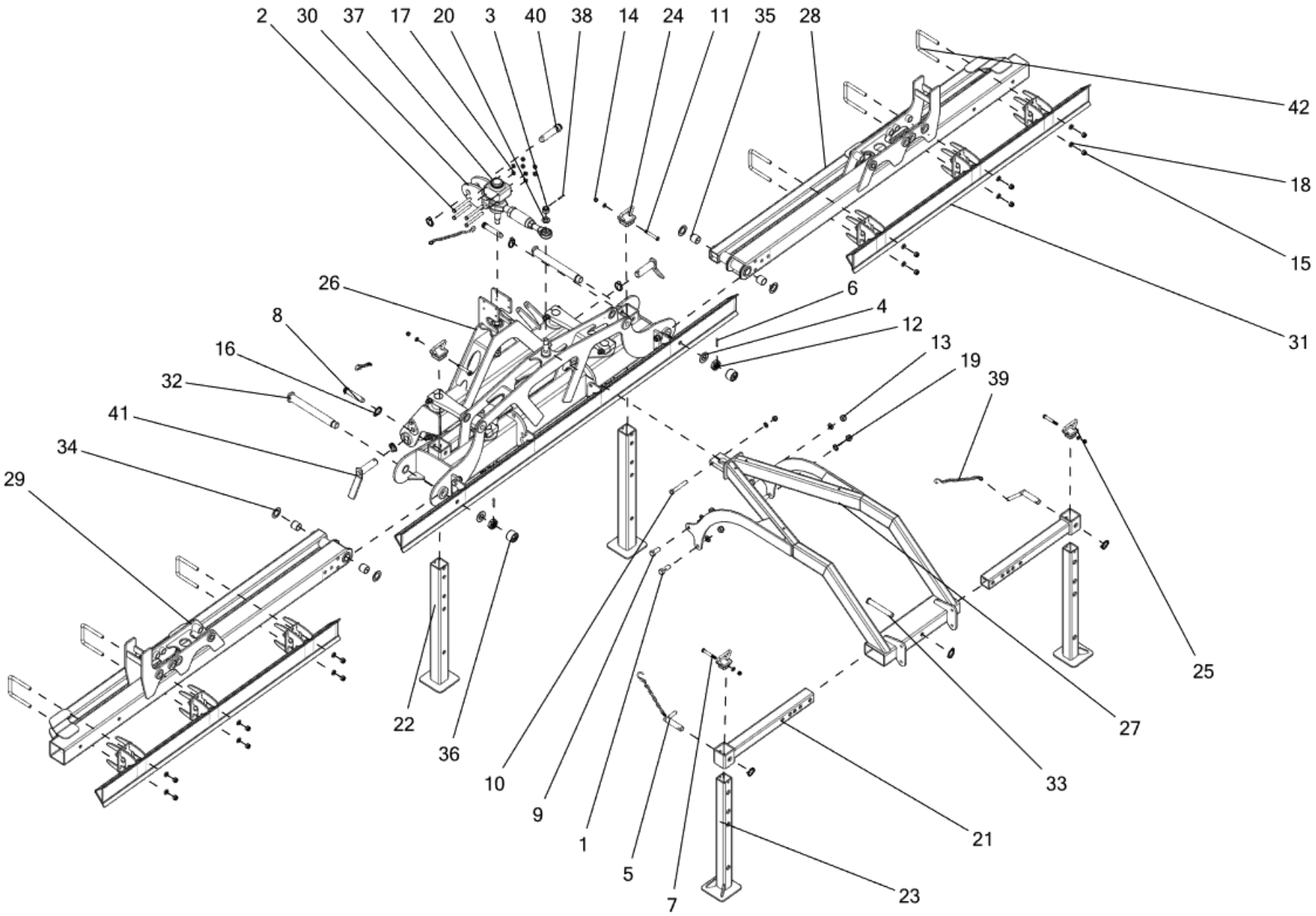
2
30
37
17
20
3
40
38
14
24
11
35
28
42
18
15
31
26
8
16
32
41
34
29
6
4
12
13
19
39
25
27
33
21
23
22
36
10
9
1
5
7

Fig.	Serial no.	Part no.	Quantity	Description **Tab.2.**
1		100306066	2	EL-GALV 8.8 STEEL BOLT 20X60
2		100306110	4	STEELBOLT 8.8 M12X140. ELGV.
3		100316062	2	CROWNNUT M24X2 ELGV.
4		100331065	2	SKIVE A Ř37/Ř66 X 5 ELGV
5		101000842	2	TRĆKBOLT KAT. 2 SV.
6		200215432	2	SPLINT 6,3X 45- DIN 94-ST-ZN
7		200217544	2	Bolt M12x95 8.8 FZB =31703431
8		300001990	2	Pin 25x144
9		300304106	2	BOLT M20X50-8.8 8.8
10		300304304	1	Bolt M16x120 10.9 FZB DIN931
11		300304695	2	Bolt M12x130 8.8 FZB DIN931 KTL
12		300315024	2	Castle nut M36x3 cl.8 FZB DIN 937
13		300316016	4	Lock nut M20 Fe/Zn5
14		300316021	8	Lock nut M12 cl.8 FZB DIN985
15		300316023	13	Lock nut M16 cl.8 FZB DIN985
16		300323046	8	Linch pin 11x45 FZB
17		300332008	8	Washer M12 FZB DIN126
18		300332009	13	Washer M16 FZB DIN126
19		300332034	4	Washer M20 FZB DIN126
20		300332035	2	#N/A
21		303010036	2	Parking leg holder
22		303010047	2	Front parking leg
23		303010048	2	Rear parking leg
24		303010061	2	Parking leg handle
25		303010062	2	Parking leg handle rear
26		303011002	1	Central frame cpl
27		303011006	1	Rear platform
28		303011012	1	Main fold wing right
29		303011013	1	Main fold wing left
30		303011016	1	Top link
31		303011031	2	Wing bar cpl.
32		303011124	2	Main fold pin
33		303020143	1	legs holder pin
34		303021212	4	IGUS GTM-4266-015 (thrust washer)
35		303021224	4	IGUS Q2SM-4044-40 (sleeve bearing)
36		303021276	2	Flexi cap FCWA-0572-038
37		600473006	1	Dust cap D-5000
38		7000547435	2	SPLIT ť 5,0X35 FZB DIN 94
39		71000180109	4	SICHERUNGSKETTE, ST VERZ.
40		71000186791	1	PIVOT O.KCAT.3 RD.42X162
41		7201014512	2	PIN KAT3
42		7203305004	6	U-bolt M16 (121x150)

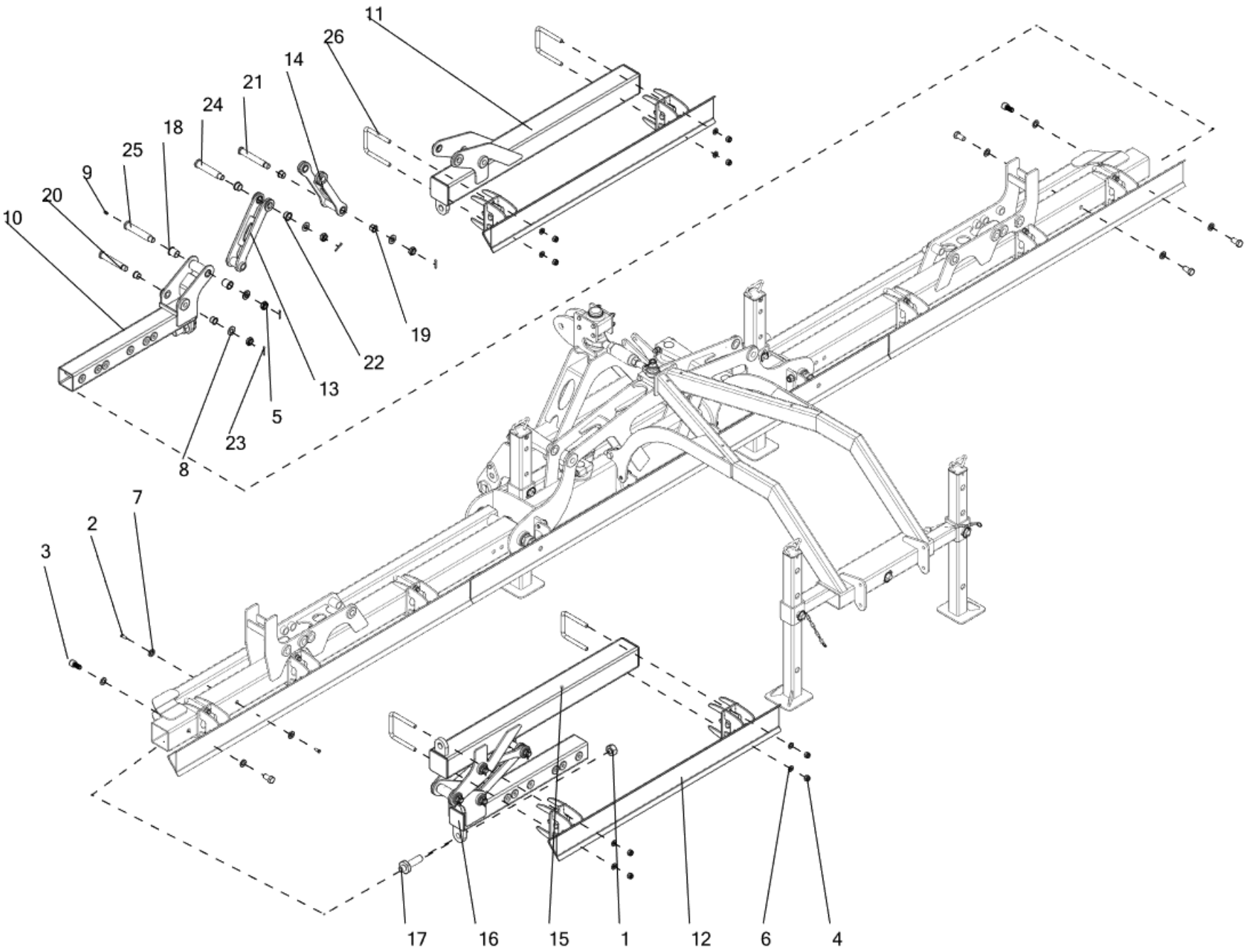
11
26
14
21
24
18
25
9
20
10
19
22
13
5
23
8
7
2
3
17
16
15
1
12
6
4

Fig.	Serial no.	Part no.	Quantity	Description	**Tab.3.**
1		200216230	2	6KTMU M 30X2,0-D IN 934- 8-ZN	
2		300304115	6	Bolt M20x40 8.8 FZB DIN933	
3		300304696	2	Bolt M20x40 8.8 FZB DIN912	
4		300316023	8	Lock nut M16 cl.8 FZB DIN985	
5		300316063	9	Nut M24x1,5 cl.6 FZB DIN937	
6		300332009	8	Washer M16 FZB DIN126	
7		300332034	8	Washer M20 FZB DIN126	
8		300332035	9	Washer M24 FE/ZN5 DIN126	
9		300421009	3	Greasing nipple M10x1	
10		303011003	1	Wing welded	
11		303011004	1	Wing welded	
12		303011032	2	Interface - short	
13		303011038	2	Pivot arms, inner	
14		303011039	2	Pivot arms, outer	
15		303011117	1	Outer fold wing	
16		303011122	1	Inner arm	
17		303020098	2	Screw	
18		303021209	4	IGUS Q2FM-3034-40 (flange bearing)	
19		303021210	8	IGUS Q2FM-2528-21 (flange bearing)	
20		303021232	2	Pin bolt	
21		303021233	2	Pin bolt	
22		303021234	4	IGUS GFM-3034-20 (flange bearing)	
23		7000547435	8	SPLIT t' 5,0X35 FZB DIN 94	
24		7203302030	2	Federbolzen 30x140	
25		7203302031	2	Bolt 30x150	
26		7203305004	4	U-bolt M16 (121x150)	

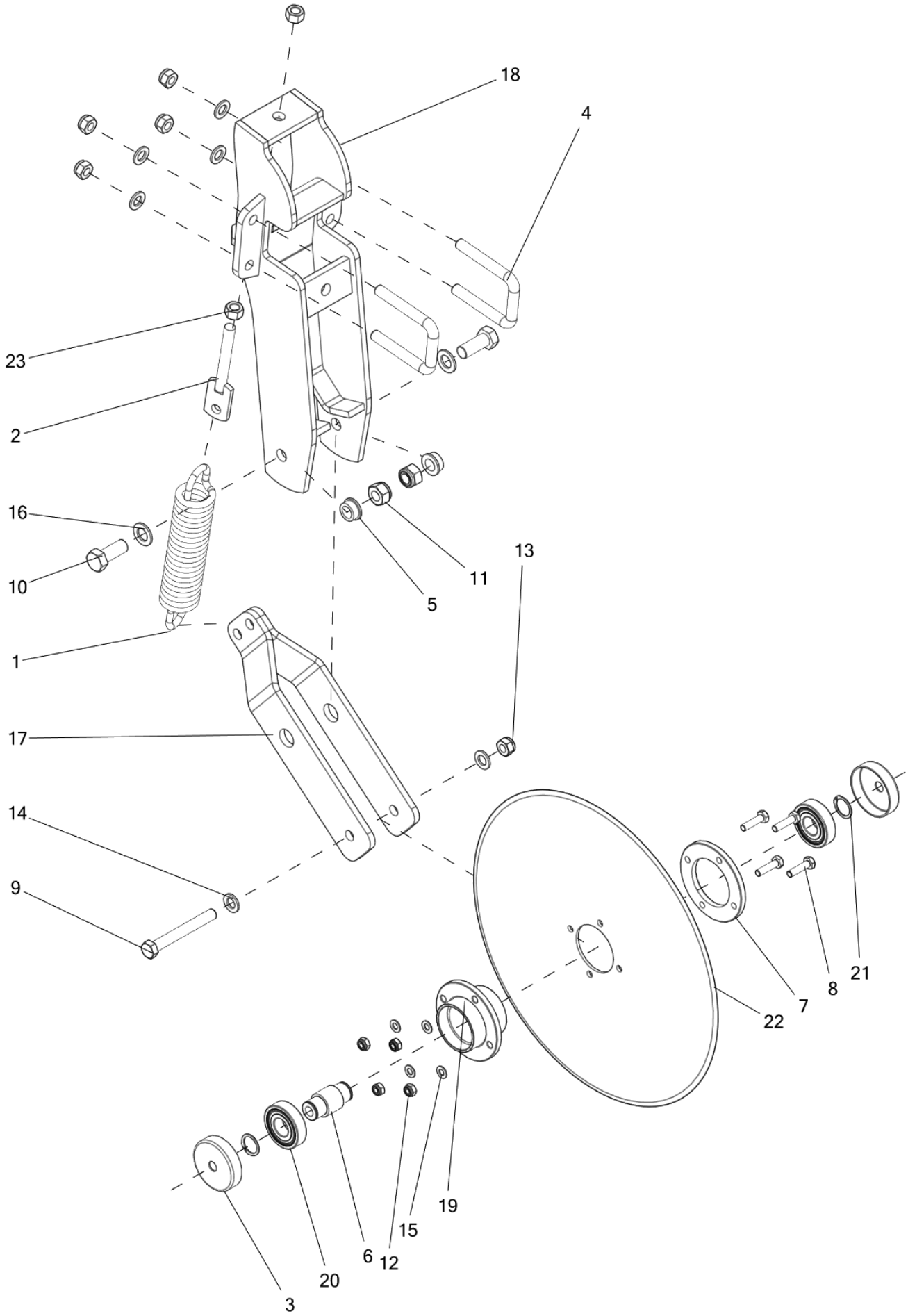
18
4
23
2
16
10
1
17
14
9
5
11
13
7
8
21
22
19
15
12
6
20
3

Fig.	Serial no.	Part no.	Quantity	Description **Tab.4.**
1		101019349	1	EHF GUIDE COULTER SPRING
2		101019350	1	EHF GUIDE COULTER TENSION BLT
3		300008288	2	hub cap
4		300008335	2	Shackle M16 (na rure 70x70)
5		300008341	2	Bush-stabilizing disc VCO-I
6		300008346	1	Axel of disc
7		300008347	1	Flange hub-painted
8		300304036	4	Bolt M10x40 8.8 FZB DIN931
9		300304088	1	Bolt M16x130 8.8 FZB DIN931
10		300304106	2	BOLT M20X50-8.8 8.8
11		300316016	2	Lock nut M20 Fe/Zn5
12		300316020	4	Lock nut M10 cl.8 FZB DIN985
13		300316023	5	Lock nut M16 cl.8 FZB DIN985
14		300332009	6	Washer M16 FZB DIN126
15		300332027	4	Washer M10 FZB DIN126
16		300332034	2	Washer M20 FZB DIN126
17		300398700	1	Welded arm stabilizing disk
18		300398800	1	Bracket disk stabilizing lying - welded
19		300399100	1	Hub
20		300401052	2	Bearing 6306-2RS1 SKF
21		300407011	2	External circlip Z 30x1,5 FZB DIN471
22		41658066200	1	DISC PLAIN 20"
23		71307216010	2	Nut M16 cl.8 cz. DIN934

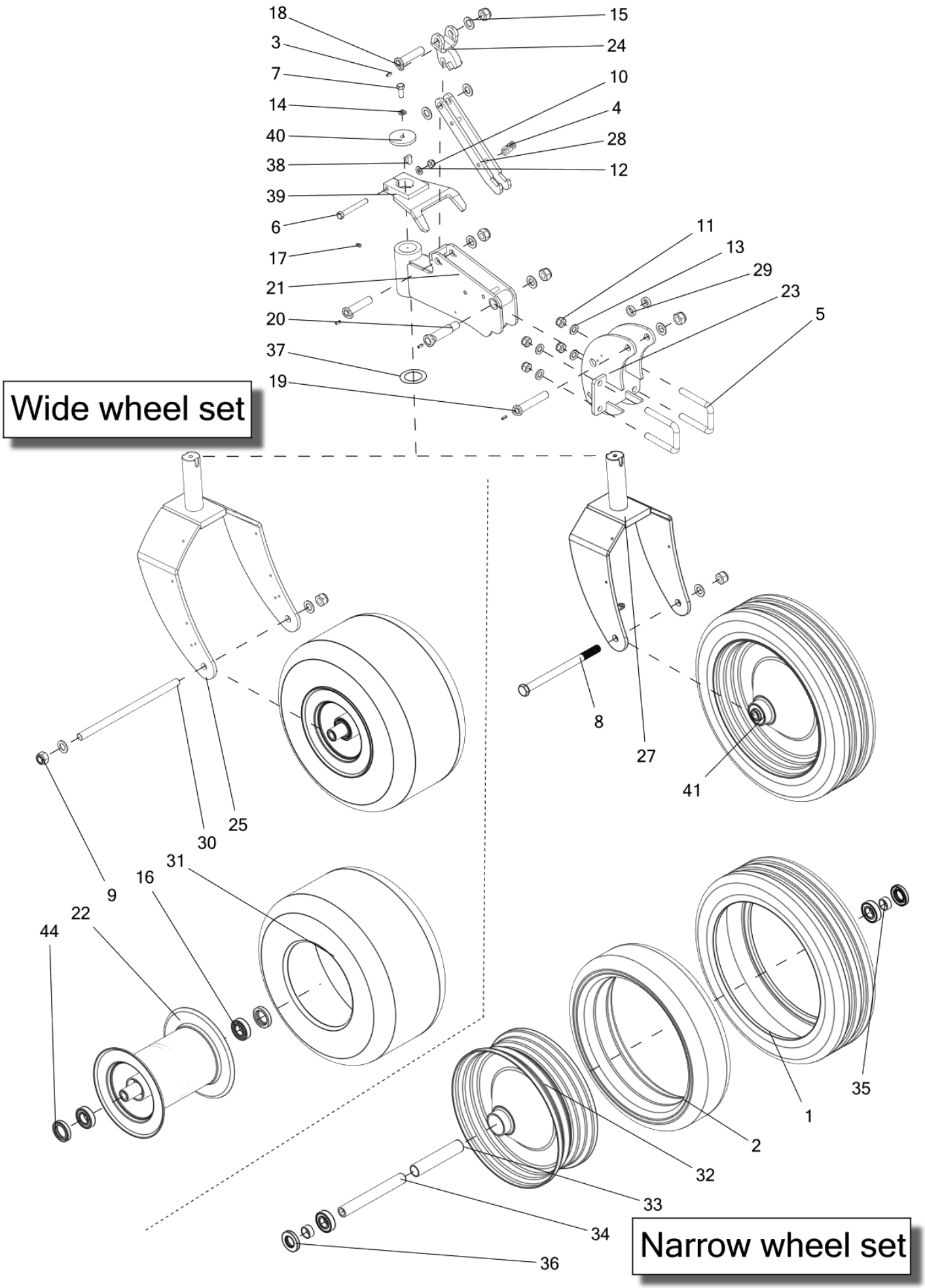
18
3
7
14
40
38
39
6
17
21
20
37
19
15
24
10
4
28
12
11
13
29
23
5
Wide wheel set
8
27
41
9
30
25
31
16
22
44
35
1
2
32
33
34
36
Narrow wheel set

Fig.	Serial no.	Part no.	Quantity	Description **Tab.5.**
1		100423070	1	TIRE 24X8.00-14,5 4PLY K401A
2		100423071	1	SLANGE 200/60-14,5 TR15
3		200216093	4	SPANNSTI 6X 16- DIN 1481-ZN ECOSI
4		300006905	1	Spring
5		300008335	2	Shackle M16 (na rure 70x70)
6		300304051	1	Bolt M12x100 8.8 FZB DIN931
7		300304056	1	BOLT M12X30-8.8-B 8.8
8		300304302	1	Bolt M20x290 8.8 FZB DIN931
9		300316016	7	Lock nut M20 Fe/Zn5
10		300316021	1	Lock nut M12 cl.8 FZB DIN985
11		300316023	4	Lock nut M16 cl.8 FZB DIN985
12		300332008	1	Washer M12 FZB DIN126
13		300332009	4	Washer M16 FZB DIN126
14		300332022	1	Spring washer M12 FZB DIN127B
15		300332034	9	Washer M20 FZB DIN126
16		300401020	4	Bearing 6206 2RS
17		300421006	1	Greasing nipple M8x1
18		303010050	2	Pin bolt
19		303010051	1	Pin bolt
20		303010052	1	Pin bolt
21		303010071	1	Wheel link
22		303021282	1	Rim GK 7,00x12 H2 for VCO-I
23		303010101	1	Holder
24		303010151	1	Wheel lock
25		303010211	1	Wheel fork
26		303011129	1	Wheel with tire 23x10,50-12 for VCO-I
27		303011149	1	Narrow wheel fork
28		303020301	1	Wheel lock
29		303020302	2	Spacer
30		303020303	1	Screw
31		303021283	1	Tire 23x10,50-12 for VCO-I
32		372002809	1	RIM GK 6.75x14.5 20x240 SILVER
33		372002812	1	DISTANCE TUBE 35x2,0x178,2
34		372002813	1	INNER TUBE 30x4,5x240
35		372002814	2	METAL SEAL 35x2,5x15
36		372002815	2	OIL SEAL 356210
37		7201003051	1	DISC. 50,5/75/1,5
38		7201003056	1	Key 14x9x25
39		7201003070	1	Bumper welded
40		7201003077	1	Washer 12,5/75/8
41		7201003085	1	Wheel 4/4,5 m - GK 6.75x14,5 10PLY
42		74266235101	2	SEAL 35X62X10 2L

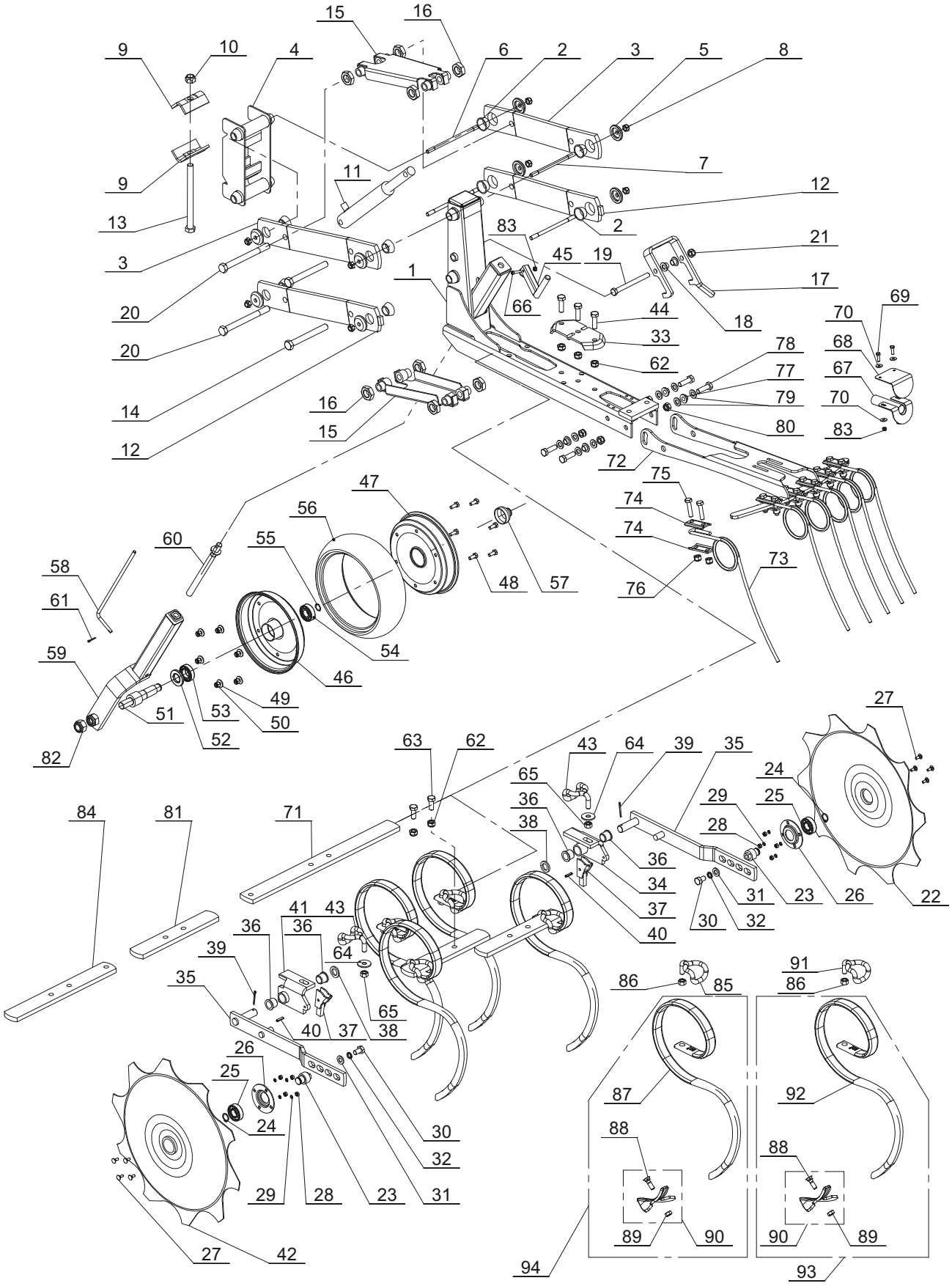
15
16
9
10
4
6
2
3
5
8
9
11
7
12
13
2
83
21
3
45
19
1
17
20
66
44
18
69
70
20
33
78
68
62
77
67
14
16
79
70
15
80
83
12
72
75
47
74
56
74
60
55
73
58
48
57
76
61
54
59
46
49
51
53
50
52
82
27
63
62
43
64
39
35
24
65
29
25
84
81
71
36
38
28
36
34
31
23
26
22
37
30
32
40
41
43
36
36
39
64
91
35
86
85
86
65
40
37
38
26
25
87
92
24
30
88
88
32
29
28
23
31
89
90
90
89
27
42
94
93

Fig.	Serial no.	Part no.	Quantity	Description **Tab.6.**
1		300007463	1	L-part for VCO section- reinforced
2		101017502	8	BEARING BUSH
3		300007666	2	Arm parallelogram (painted) VCO
4		300357100	1	Section holde for VCO-reinforced-painted.
5		300007466	8	Washer for section arm.
6		300007481	2	Stay bolt M10x195
7		300007482	2	Stay bolt M10x170
8		300316020	8	Lock nut M10 cl.8 FZB DIN985
9		300007479	2	V-clamp for VCO section
10		300316023	5	Lock nut M16 cl.8 FZB DIN985
11		310007136	1	Hydraulic cylinder 30x25x120(2025-0120-0002)
12		300375800	2	Arm parallelogram (lock)VCO
13		100306127	1	STEELBOLT M16X197
14		100306095	2	M16 X 140 STEELBOLT GALV
15		300361501	2	Reinforcement of parallelogram
16		71307124020	8	MUTTER M24X1.5
17		300007664	1	Lock for working section
18		100402031	2	BEAARING Ř12/Ř165
19		300304021	1	Bolt M12x130 8.8 FZB DIN931
20		300304250	2	Bolt M16x170 8.8 FZB DIN931
21		300316021	1	Lock nut M12 cl.8 FZB DIN985
22		101016156	1	SHIELD, RIGHT
23		101016225	2	BEARING STUD F. PLANTSCHIELD
24		100407011	2	External circlip 20x1,2 DIN471
25		300401017	2	Bearing 6204 2RS
26		101017270	2	VBTF PLANT GD:BEARING HOUSE
27		100311000	8	Bolt M6x16 4.6 FZB D (ver. 3 tines)
28		300315017	8	Nut M6 cl.8 FZB DIN934
29		100332002	8	EL-GALV.LOCK WASHER 6MM
30		300304054	2	SRUBA M12X20-8.8 8.8
31		300332044	2	Enlarging washer M12 FZB DIN9021
32		100332005	2	EL-GALV.LOCK WASHER 12MM
33		101019085	1	EHF TINE BAR CLAMP
34		101016203	1	HOLDER F. PLANTPROTECTER WD R
35		101016205	2	LEVER FOR ROOLING SHELF WELDED
36		101017013	4	VBTF MTNG.BKT/P.ARM BUSH
37		101016157	2	LOCKING PAWL VCO
38		100331009	2	Washer M20 NOW 300332034
39		100333009	2	3,2 X 35 PIN
40		300323028	2	Spring pin 6x24 FZB DIN1481
41		101016204	1	HOLDER F. PLANTPROTECTER WD L
42		101016155		SHIELD, LEFT VCO
43		101000813	2	SPĆNDEBŘJLE 32X12 U.MŘTRIK MALET
44		300304058	3	Bolt M12x40 8.8 FZB DIN933
45		101016357	1	HĹNDTAG SV. VCO
46		100423017	1	WHEEL PART
47		100423016	1	WHEEL PART
48		300304152	6	Bolt M8x16 8.8 FZB DIN933
49		7000602447	6	Washer M8 FZB DIN9021

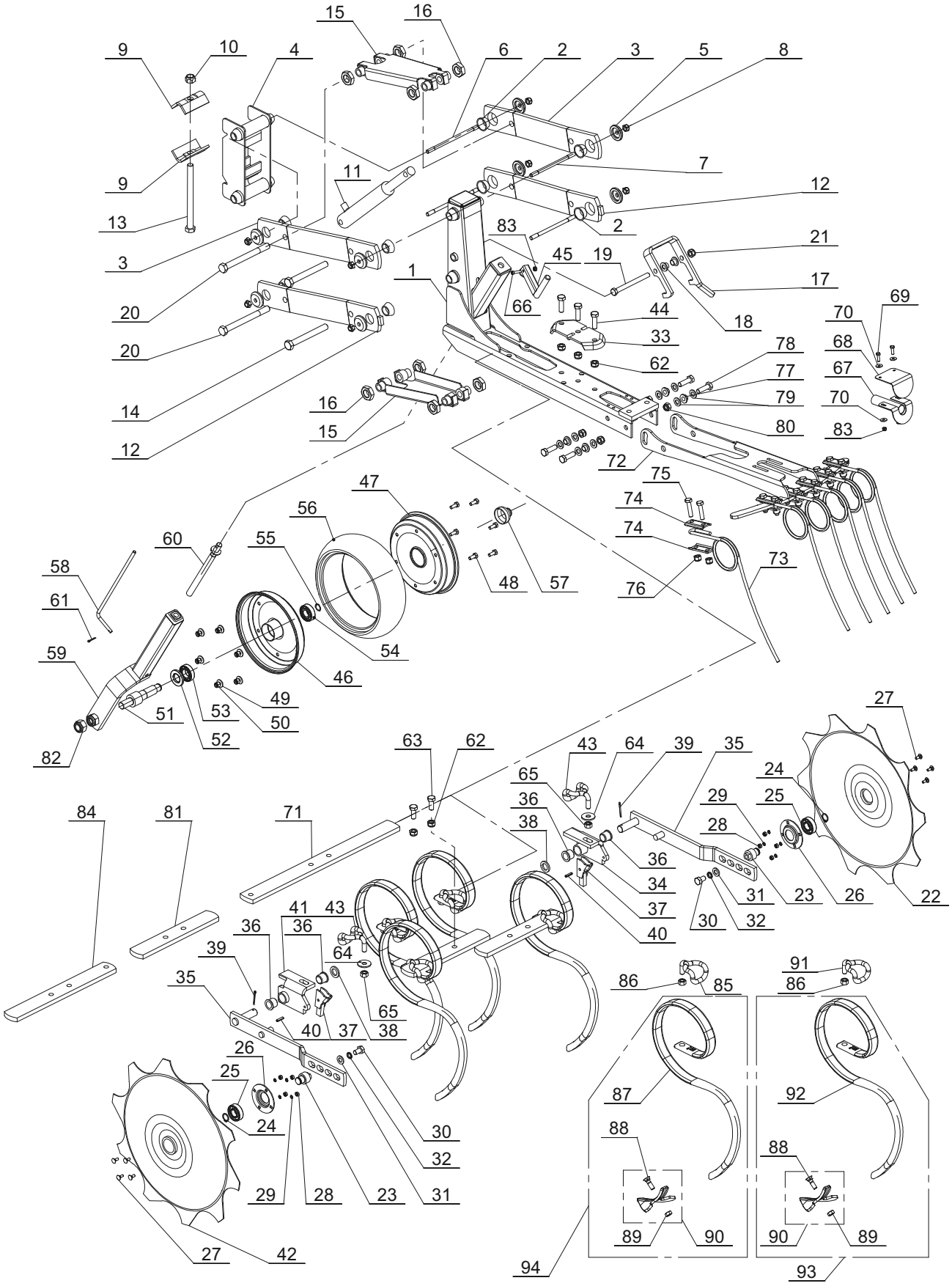
15
16
9
10
4
6
2
3
5
8
9
11
7
12
13
2
83
21
3
45
19
1
17
20
66
44
18
69
70
20
33
78
68
62
77
67
14
16
79
70
15
80
83
12
72
75
47
74
56
74
60
55
73
58
48
57
76
61
54
59
46
49
51
53
50
52
82
27
63
62
43
64
39
35
24
65
29
25
84
81
71
36
38
28
36
34
31
23
26
22
37
30
32
40
41
43
36
36
39
64
91
35
86
85
86
65
40
37
38
26
25
87
92
24
30
88
88
32
29
28
23
31
89
90
90
89
27
42
94
93

Fig.	Serial no.	Part no.	Quantity	Description	**Tab.7.**
50		300316027	6	Lock nut M8 cl.8 FZB DIN985	
51		100423015	1	Support wheel axle 1209 VC	
52		100413014	1	Washer SKFZ 005 VC	
53		100401000	1	BEARING 6005	
54		100401007	1	BEARING 6204 SKF	
55		100407011	1	External circlip 20x1,2 DIN471	
56		101019111	1	Tire 12"X4" VC	
57		101020196	1	WHEEL 'A' AXLE END CAP,1697H	
58		101017514	1	SCALE	
59		101017510	1	UPRIGHT WELD.	
60		101017503	1	WHEEL SPINDLE	
61		100333001	1	ST 320 PIN	
62		300316021	5	Lock nut M12 cl.8 FZB DIN985	
63		300304057	2	Bolt M12x35 8.8 FZB DIN933	
64		300315003	4	NUT M12 cl.8 FZB DIN934	
65		100321017	1	EL-GALV.POSI-DRIVE SCREW 6X25	
66		372348600	1	Spreader plate cpl.	
67		372007095	1	Spreader plate outer	
68		300304135	2	Bolt M6x20 8.8 FZB DIN933	
69		300332052	4	Large washer M6 FZB DIN9021	
70		101016209	1	BAR WITH HOLES L580	
71		300363200	1	Rear harow body (75cm)	
72		300007483	6	Rear harrow tine- VCO	
73		300033389	12	Flat bar	
74		300304037	12	Bolt M10X45 8.8	
75		300316020	12	Lock nut M10 cl.8 FZB DIN985	
76		300007527	4	Rear harrow bush	
77		300304058	4	Bolt M12x40 8.8 FZB DIN933	
78		300332008	8	Washer M12 FZB DIN126	
79		300316021	4	Lock nut M12 cl.8 FZB DIN985	
80		101017342	1	BEAM, BORED	
81		300316016	1	Lock nut M20 Fe/Zn5	
82		300316026	3	Lock nut M6 cl.8 FZB DIN985	
83		101016208	1	BAR WITH HOLES L400	
84		101000742	1	Tine holder 12X32 + nuts M12	
85		101000507	1	Tine hoder	
86		101000766	1	VCO-TINE 32X12,4	
87		101000644	1	ROW CROP SHARE 10.5 CM W/BOLT	
88		101019785	1	VIBRO-BETA 5" SHARE + BOLT	
89		101019786	1	VIBRO-BETA 7" SHARE + BOLT	
90		101000012	1	Tine spring	
91		101000760	1	VCO-TINE W. 13,5 CM SHARE	
92		101000761	1	VCO-TINE W. 20 CM SHARE	
93		101000600	1	Tine KPL. VC	

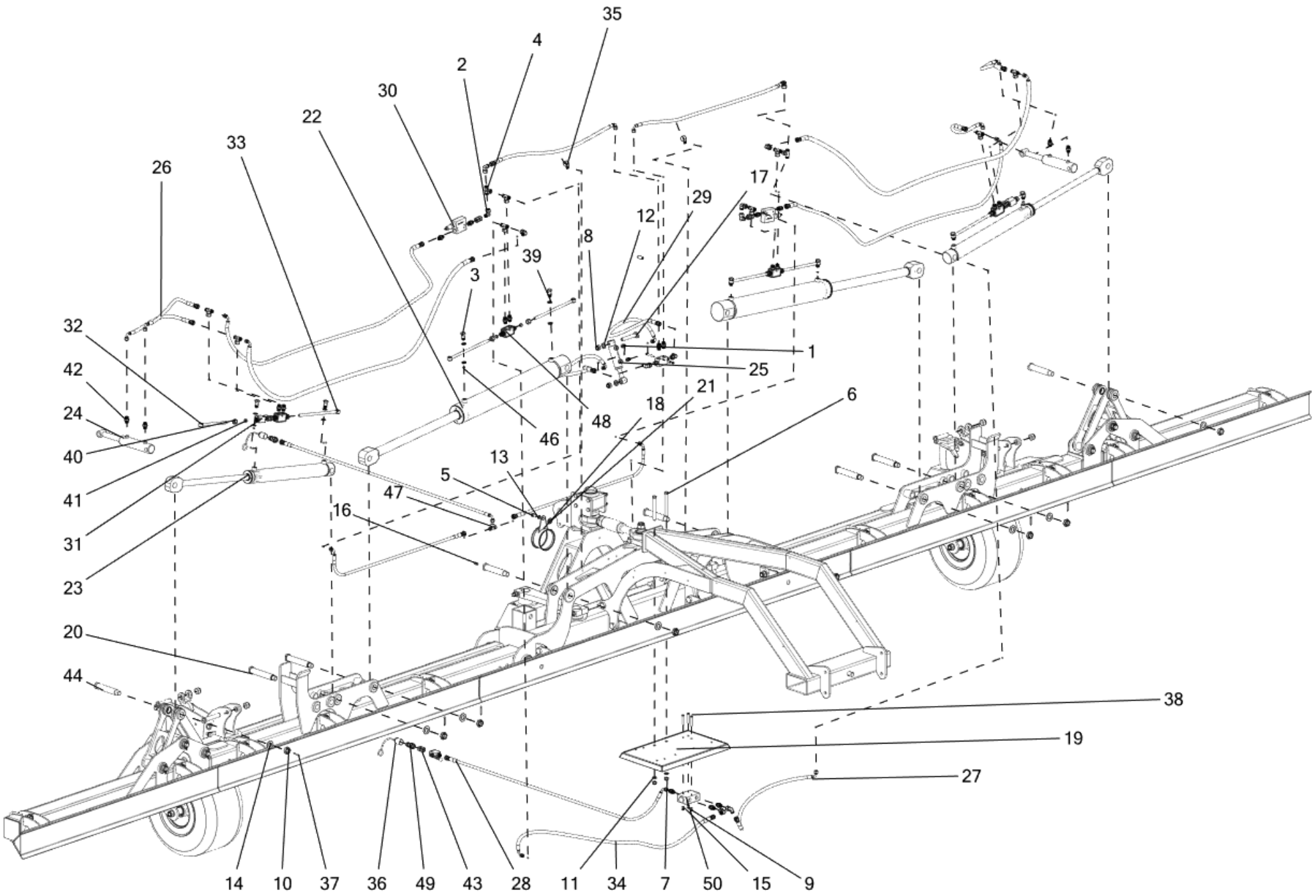
35
4
2
30
22
33
26
17
29
12
8
39
3
32
42
24
40
41
31
23
1
25
21
18
6
48
46
13
5
47
16
20
44
38
19
27
14
10
37
36
49
43
28
11
34
7
50
15
9

Fig.	Serial no.	Part no.	Quantity	Description **Tab.8.**
1		200062664	2	S-EGES8-L R1/4"-WD-SV M14x1,5-ST-ZN
2		300000867	11	Elbow fitting
3		300004562	8	Hydraulic bolt 3/8"
4		300037400	10	T-fitting
5		300304032	1	Bolt M10x25 8.8 FZB DIN933
6		300304053	2	Bolt M12x120 8.8 FZB DIN931
7		300316021	2	Lock nut M12 cl.8 FZB DIN985
8		300316023	2	Lock nut M16 cl.8 FZB DIN985
9		300316026	4	Lock nut M6 cl.8 FZB DIN985
10		300316063	8	Nut M24x1,5 cl.6 FZB DIN937
11		300332008	2	Washer M12 FZB DIN126
12		300332009	2	Washer M16 FZB DIN126
13		300332027	1	Washer M10 FZB DIN126
14		300332035	8	Washer M24 FE/ZN5 DIN126
15		300332038	4	Washer M6 FZB DIN126
16		300421009	2	Greasing nipple M10x1
17		303011125	1	Pin
18		303011147	1	Hose holder
19		303020183	1	Cover
20		303021228	4	Pin bolt
21		303021280	1	Spacer
22		330110001	2	Hydraulic Cylinder SMT1.95.45.617
23		330110003	2	Hydraulic cylinder SMT1.60.30.505
24		330110005	2	Hydraulic cylinder 40/25 s100
25		330110007	1	Hydraulic cylinder32/20 s50
26		330120007	4	Hydr. hose 3/8" M18x1,5-0°-N / M18x1,5-90°-N L=750 - GP
27		330120025	5	Hydraulic hose 3,8" M18x1,5-90° / M18x1,5-0° L=1100
28		330120026	6	Hydraulic hose 3,8" M18x1,5-90° / M18x1,5-0° L=2300
29		330120046	2	Hydraulic hose M14x1,5 90° / M18x1,5 0° L=1100 - VCO-I
30		330140004	2	Valve VSQAPP 3/8" (170bar)
31		330140006	3	Ball valve M18x1,5 (RS2-12L)
32		330150012	2	Long Banjo DIN 2353 L=200 R1250
33		330150013	6	Extra Long Banjo L=300 R1271
34		372005164	1	HYDRAULIC HOSE L=1500
35		600470007	2	Hose clamp 3/8" =100420022
36		7000406140	2	BESK.HżTTE F.HAN 1/2"SORT
37		7000547435	5	SPLIT ť 5,0X35 FZB DIN 94
38		7000580255	4	Bolt M6x55 A2 DIN931
39		7000602850	16	PAKN. BONDED SEAL PP45CC
40		71202039800	8	Nut M12-L / UEM NW10L
41		71202049420	8	SCHNEIDRING DPR12-L/S
42		71202079060	21	PIPE END
43		71202079361	5	Dual nut fitting DMO NW 10 HL
44		7203302030	1	Federbolzen 30x140
46		7203310007	4	Stifle plate
47		7210000105	1	T-piece. XT NW 10 HL
48		7210000119	5	Sperrblock ARDPNU 6 (Chapel)
49		7210000125	2	Quick coupling XFV NW 10 HL
50		7210000135	1	Hydr. Splitter Art-Nr. VDFR 05-001

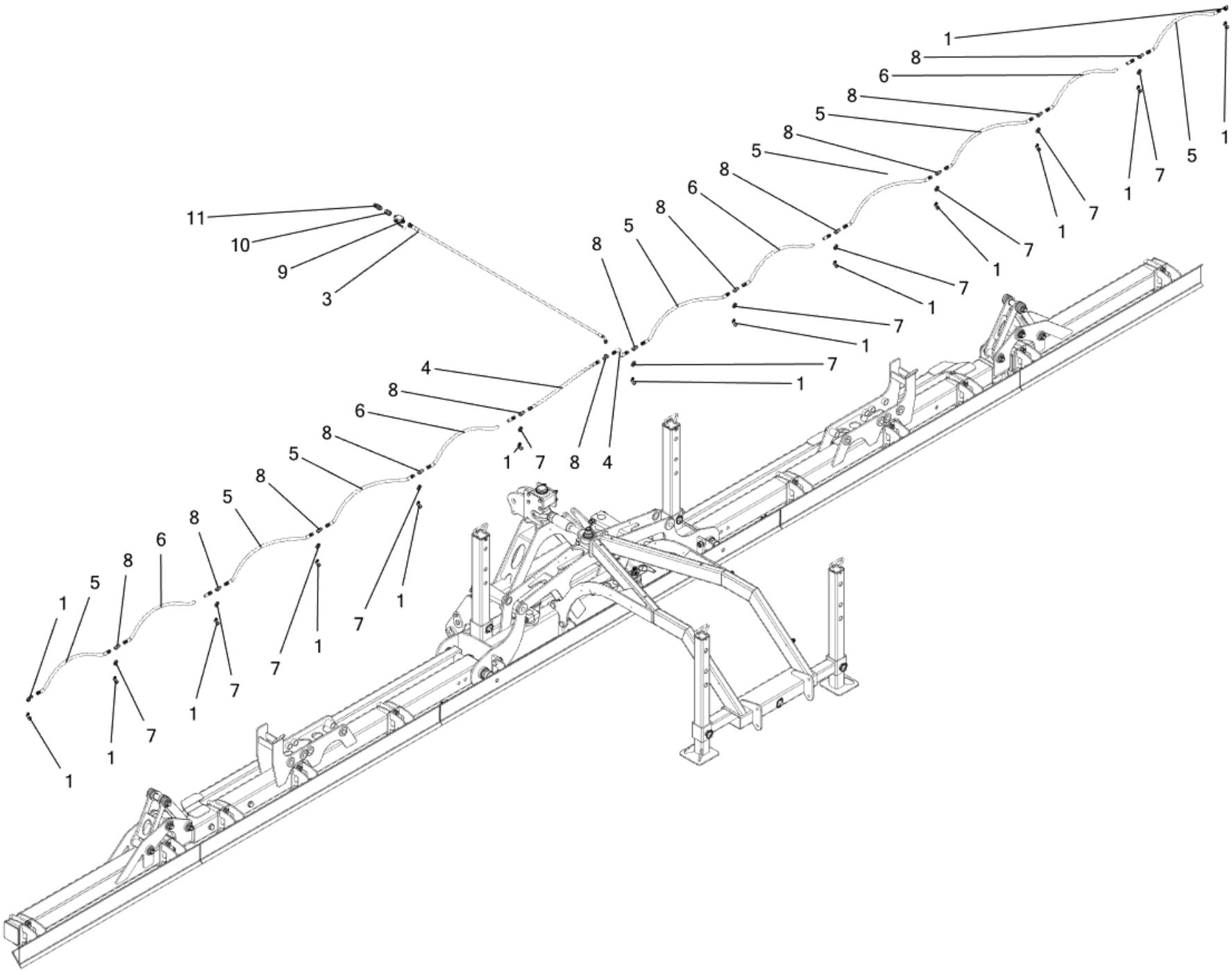
1
8
6
8
5
8
5
8
6
8
5
8
4
8
6
8
5
8
5
8
6
8
5
1
11
10
9
3
1
7
8
4
1
7
1
7
1
7

Fig.	Serial no.	Part no.	Quantity	Description **Tab.9.**
1		300007696	15	Angle adjustable
2		303001001	4	VCO-I 9m 12-75 camera steering
3		330120008	1	Hydraulic hose 1/4" M14x1,5-0°-N / M18x1,5-0°-N L=2100 - (
4		330120020	2	Hydraulic hose.1,4" M14x1,5-0°-N / M14x1,5-0°-N L=400
5		330120021	7	Hydraulic hose.1,4" M14x1,5-0°-N / M14x1,5-0°-N L=800
6		330120022	4	Hydraulic hose 1,4" M14x1,5-0°-N / M14x1,5-0°-N L=1100
7		330130002	11	Hydraulic fitting staight two nuts (KH498-08L)
8		330130013	12	T-fitting M14x1,5 8L -three threads
9		330140006	1	Ball valve M18x1,5 (RS2-12L)
10		71202079361	1	Dual nut fitting DMO NW 10 HL
11		7210000125	1	Quick coupling XFV NW 10 HL

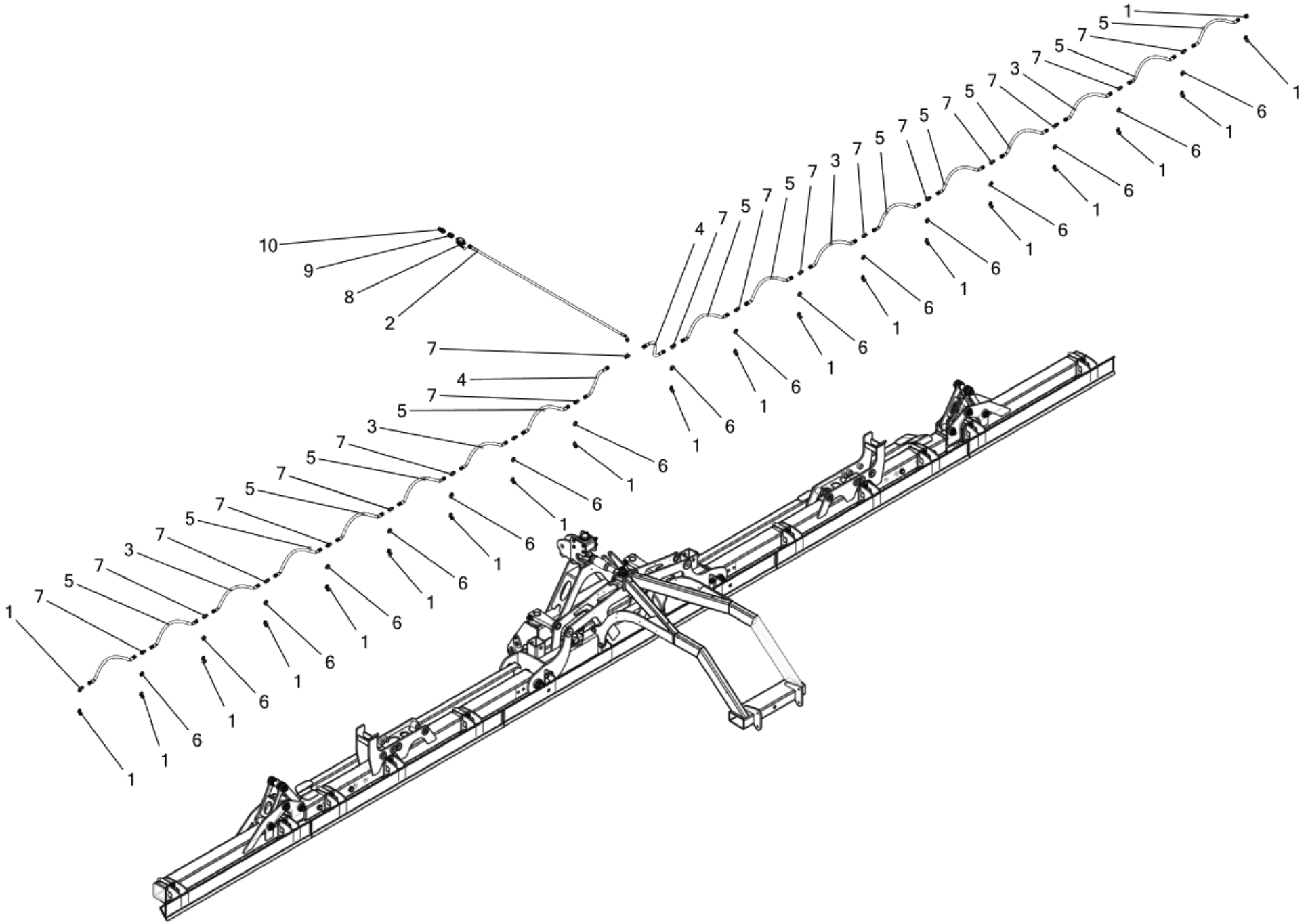
10
9
8
2
7
4
7
5
3
7
5
7
5
7
5
7
3
7
5
7
1
1
6
1
6
1
6

Fig.	Serial no.	Part no.	Quantity	Description **Tab.10.**
1		300007696	21	Angle adjustable
2		330120008	1	Hydraulic hose 1/4" M14x1,5-0°-N / M18x1,5-0°-N L=2100 - (
3		330120022	4	Hydraulic hose 1,4" M14x1,5-0°-N / M14x1,5-0°-N L=1100
4		330120023	2	Hydraulic hose.1,4" M14x1,5-0°-N / M14x1,5-0°-N L=250
5		330120024	24	Hydraulic hose.1,4" M14x1,5-0°-N / M14x1,5-0°-N L=550
6		330130002	17	Hydraulic fitting staight two nuts (KH498-08L)
7		330130013	18	T-fitting M14x1,5 8L -three threads
8		330140006	1	Ball valve M18x1,5 (RS2-12L)
9		71202079361	1	Dual nut fitting DMO NW 10 HL
10		7210000125	1	Quick coupling XFV NW 10 HL

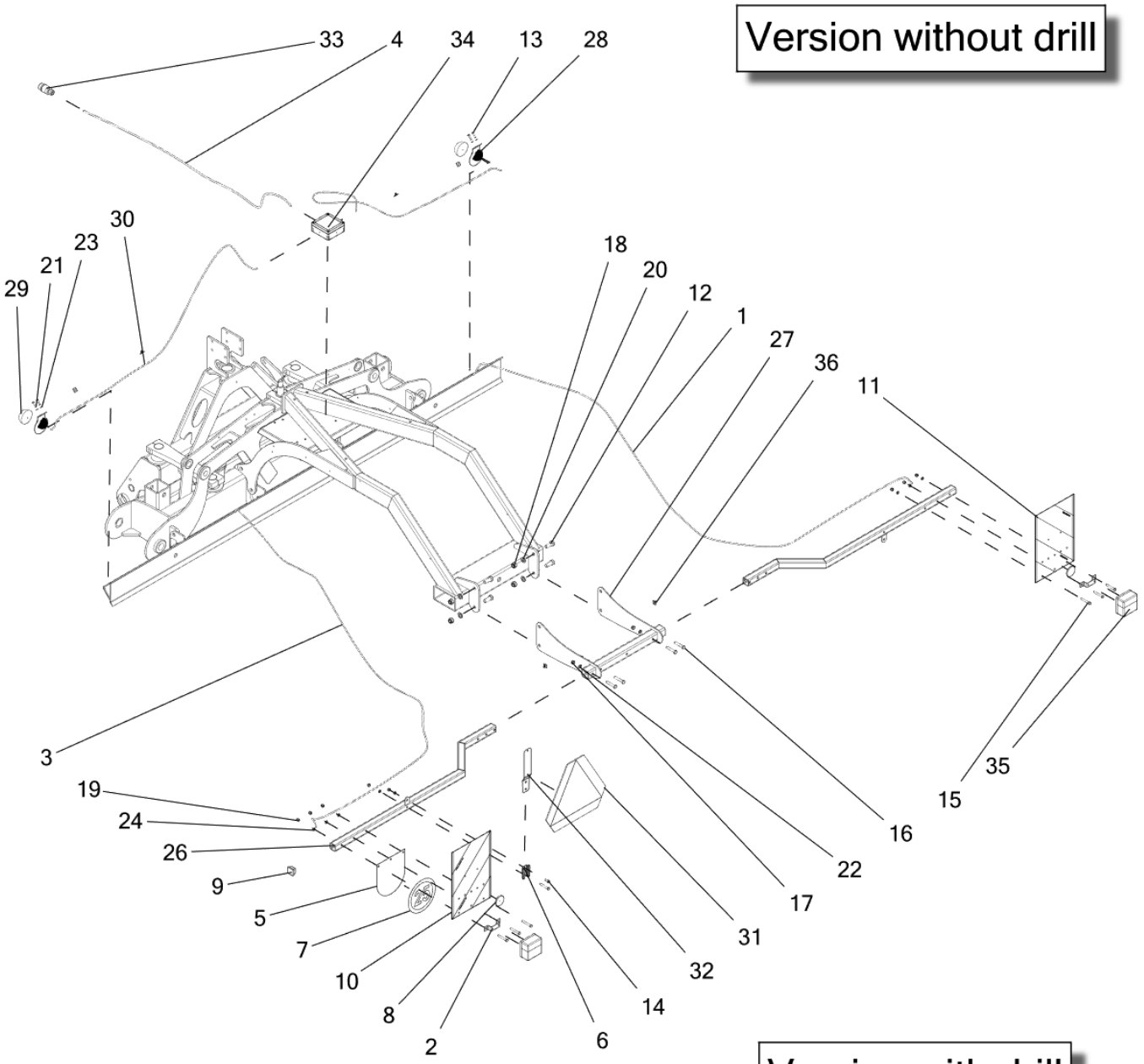
Version without drill
33
4
34
13
28
30
23
21
29
18
20
12
1
27
36
11
3
19
24
26
9
5
7
10
8
2
6
14
32
31
17
22
16
15
35

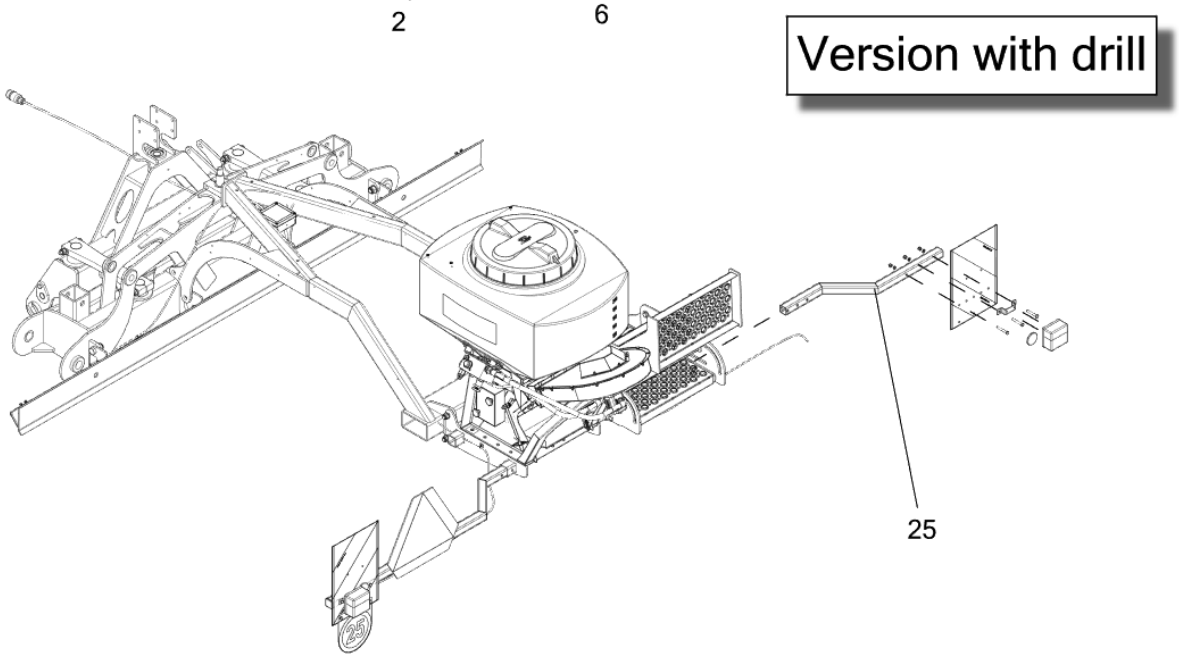
Version with drill
25

Fig.	Serial no.	Part no.	Quantity	Description **Tab.11.**
1		300004249	1	Electric wire 4x0,75 L=4000m
2		300004569	2	Bracket rear lamp ligh.kitVM3000
3		300006069	1	Electric wire 4x0,75 L=3,2m VM 3000
4		300007727	1	Electric wire 7x0,75 L=4m
5		300008272	1	Board under the sticker
6		300008276	1	Bracket Whiteboard-painted
7		300008277	1	Sticker-speed limit of 25 km / h
8		300008284	2	Red reflector adhesive fi60
9		300082634	2	Tube insert 260 Q 40x40x3
10		300167700	1	Plate 282x423 lewa
11		300167800	1	Board 282x423 right
12		300304092	4	Bolt M16x40 8.8 FZB DIN933
13		300304139	4	Bolt M6x16 8.8 FZB DIN933
14		300304153	1	Bolt M8x20 8.8 FZB DIN933
15		300304162	7	Bolt M8x60 8.8 FZB DIN931
16		300304197	4	Bolt M10x60 8.8 FZB DIN931
17		300316020	4	Lock nut M10 cl.8 FZB DIN985
18		300316023	4	Lock nut M16 cl.8 FZB DIN985
19		300316027	8	Lock nut M8 cl.8 FZB DIN985
20		300332009	4	Washer M16 FZB DIN126
21		300332020	4	Spring nut M6 FZB DIN127B
22		300332027	4	Washer M10 FZB DIN126
23		300332038	4	Washer M6 FZB DIN126
24		300332039	8	Washer M8 FZB DIN126
25		303010056	1	Light arm short
26		303010057	2	Light arm long
27		303010060	1	Light platform
28		303021270	2	Lamp plate
29		303021277	2	Lamp Type WE92
30		370002926	2	Electric wire 2 lines
31		601140055	1	SLOW MOVING SING
32		601140180	1	SPADE
33		7000018142	1	PLUG SOCKET
34		7000603072	1	Electric box-plastic, Agro Tram 2100
35		7000603318	2	Rear lamp
36		7000603330	6	Electric wires holder with glue

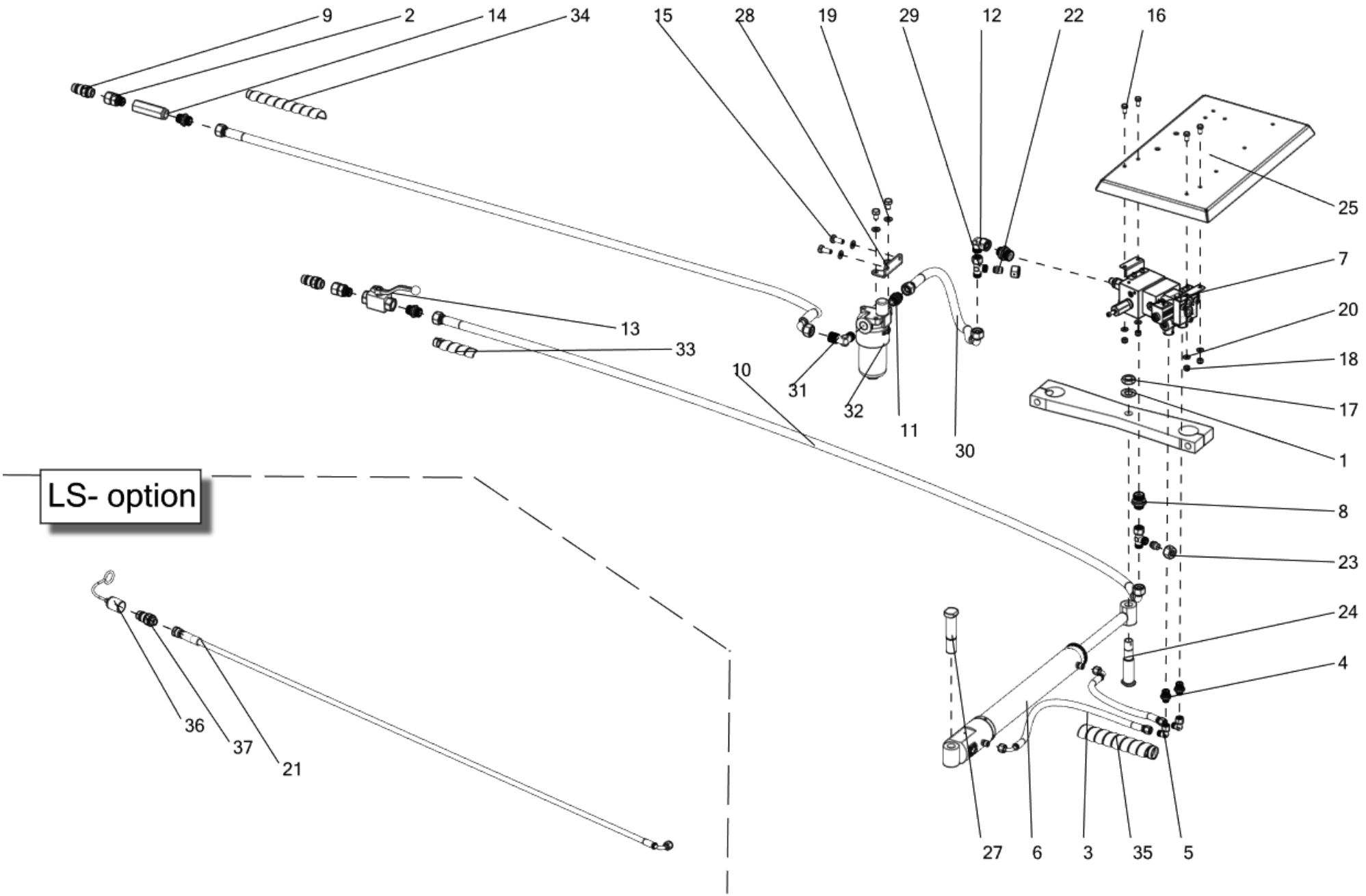
9
2
14
34
15
28
19
29
12
22
16
25
7
20
18
17
1
8
23
24
4
13
33
10
31
32
11
30
LS- option
36
37
21
27
6
3
35
5

Fig.	Serial no.	Part no.	Quantity	Description **Tab.12.**
1		100331009	1	Washer M20 NOW 300332034
2		300007688	2	"Fitting with nut 1/2""/M22x1,5 (TN426-15LR)"
3		300007693	2	Hose L=1000 L M14x1,5
4		300007695	2	Coupling 3/8"/M14x1,5
5		300007696	2	Angle adjustable
6		300007981	1	Hydraulic cylinder SMT1K50.25.380-00
7		300008255	1	Hydraulic block to slide frame
8		300008319	2	"Adapter 3/4""/M22x1,5 (TN92GG-15LR 3/4”)"
9		300008320	2	Coupling M22x1,5
10		300008321	2	Hydraulic hose M22x1,5 90° / M22x1,5 0° L=2500 - VCO-I
11		300008369	3	"Adapter 1/2""/M22x1,5 ""(TN 92GG -15LR”)"
12		300008371	1	"Adjustable elbow fitting M22x1,5 (""TN 419-15L"")"
13		300008386	1	Ball valves 2 ways
14		300008387	1	"Check valves 1/2""""
15		300304031	4	Bolt M10x20 8.8 FZB DIN933
16		300304152	4	Bolt M8x16 8.8 FZB DIN933
17		300315010	1	Nut M20x1,5 cl.8 FZB DIN934
18		300316027	4	Lock nut M8 cl.8 FZB DIN985
19		300332021	4	Spring washer M10 FZB DIN127B
20		300332039	4	Washer M8 FZB DIN126
21		301044038	1	Hydraulic hose L=450, M14x1,5 90° /M18x1,5
22		301044076	2	Blinder TN 324 - 15L
23		301044077	2	Nut TN 81 - 15L M22x1,5
24		303020054	1	Cylinder front pin
25		303020183	1	Cover
26		303021057	1	Paraellelogram arm
27		303021204	1	Side shift cylinder pin
28		303021281	1	Filter plate
29		330020043	2	Asymmetric T fitting M22x1,5 ("TN 421-15L")
30		330120019	1	Hydraulic hose 1/2" M22x1,5 45°/ M22x1,5 0° L=600- VCO-I
31		330130008	1	Elbow fitting with locking nut M22x1,5 ("TA 514 R 15L")
32		330170030	1	Hydraulic filter
33		330190023	1	Helix protection red 3/8" L=100mm - GP
34		330190024	1	Helix protection red 3/8" L=200mm - GP
35		330190026	1	Spiral hoses protection HG-32
36		7000600399	1	BESK.HżTTE F.HAN 1/2"RťD
37		7210000125	1	Quick coupling XFV NW 10 HL

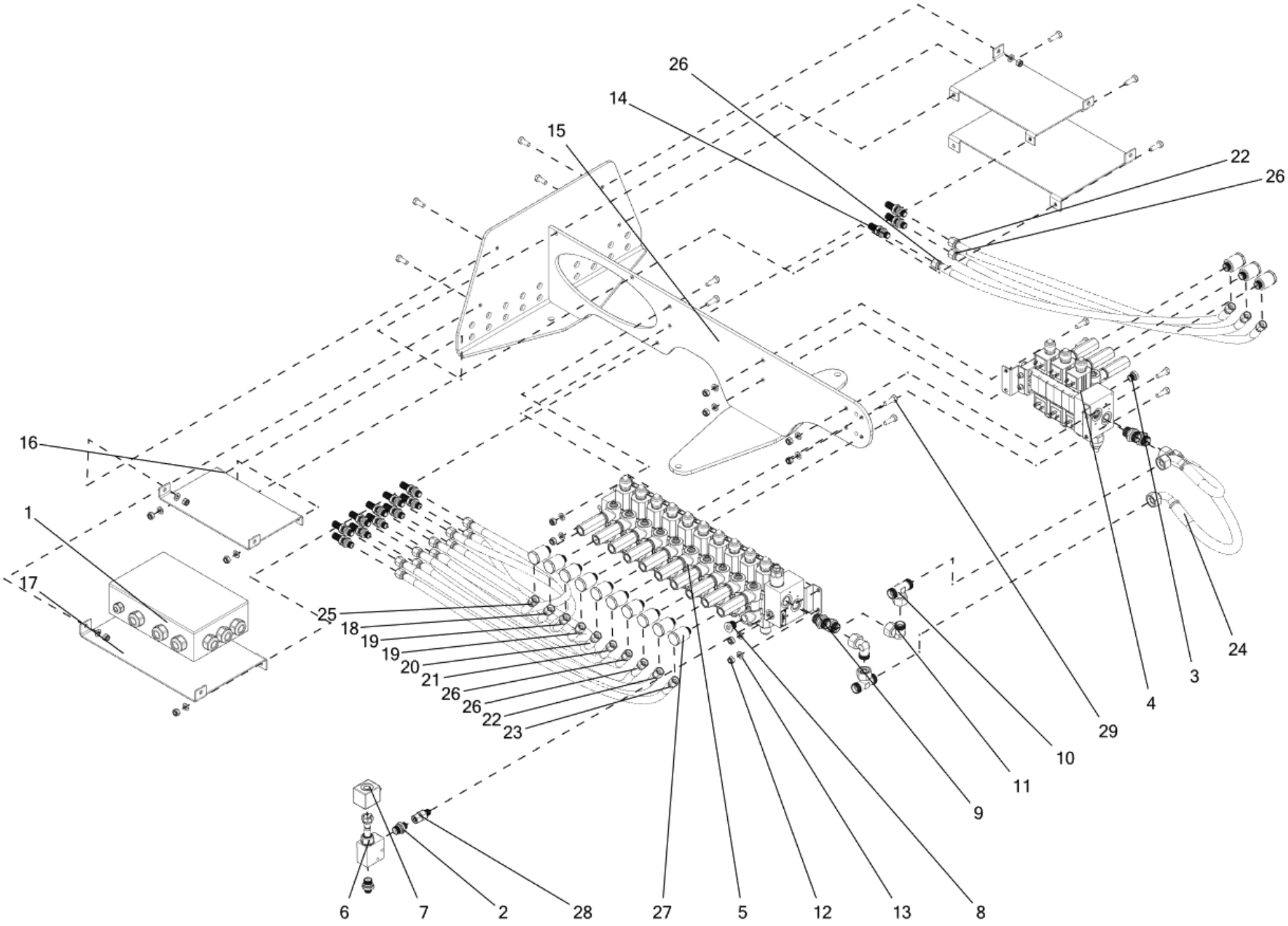
26
14
15
22
26
16
1
17
25
18
19
19
20
21
26
26
22
23
24
3
4
29
10
11
9
6
7
2
28
27
5
12
13
8

Fig.	Serial no.	Part no.	Quantity	Description **Tab. 13.**
1		300007571	1	Control box
2		300007695	2	Coupling 3/8"/M14x1,5
3		300007772	1	"Plug 1/4""(TN 185GG 1/4 R”)"
4		300008256	1	Hydraulic block 3 sections
5		300008258	1	Hydraulic block 10 sections
6		300008259	1	Hydraulic block of high pressure
7		300008260	1	Coil For H.P.L.B.
8		300008368	13	"Plug 3/8""(TN 185GG 3/8 R”)"
9		300008369	4	"Adapter 1/2""/M22x1,5 ""(TN 92GG -15LR”)"
10		300008370	2	"Adjustable T fitting M22x1,5 (""TN 420-15L"")"
11		300008371	2	"Adjustable elbow fitting M22x1,5 (""TN 419-15L"")"
12		300304153	4	Bolt M8x20 8.8 FZB DIN933
13		300304155	11	Bolt M8x25 8.8 FZB DIN933
14		300316027	15	Lock nut M8 cl.8 FZB DIN985
15		300332039	15	Washer M8 FZB DIN126
16		301044091	13	Fitting TA 102 - 8 L
17		303011126	1	Hydraulic platform
18		303021243	2	Plate bended
19		303021244	2	Plate bended
20		330120027	1	Hydraulic hose 1/4" M14x1,5-0°-N / M14x1,5-0°-N L=600
21		330120028	2	Hydraulic hose 1/4" M14x1,5-0°-N / M14x1,5-0°-N L=650
22		330120029	1	Hydraulic hose 1/4" M14x1,5-0°-N / M14x1,5-0°-N L=700
23		330120030	1	Hydraulic hose 1/4" M14x1,5-0°-N / M14x1,5-0°-N L=750
24		330120031	2	Hydraulic hose 1/4" M14x1,5-0°-N / M14x1,5-0°-N L=850
25		330120032	1	Hydraulic hose 1/4" M14x1,5-0°-N / M14x1,5-0°-N L=900
26		330120044	2	Hydraulic hose 1/2" M22x1,5-0°-N / M22x1,5-90°-N L=400
27		330120047	1	Hydraulic hose 1/4" M14x1,5-0°-N / M18x1,5-0°-N L=550
28		330120048	4	Hydraulic hose 1/4" M14x1,5-0°-N / M18x1,5-0°-N
29		7000405785	1	SCREWED CONNECTION
30		7000405785	12	SCREWED CONNECTION
31		7000603469	1	R?RSTUDS ?08X1/4 BSP VA08RLNV

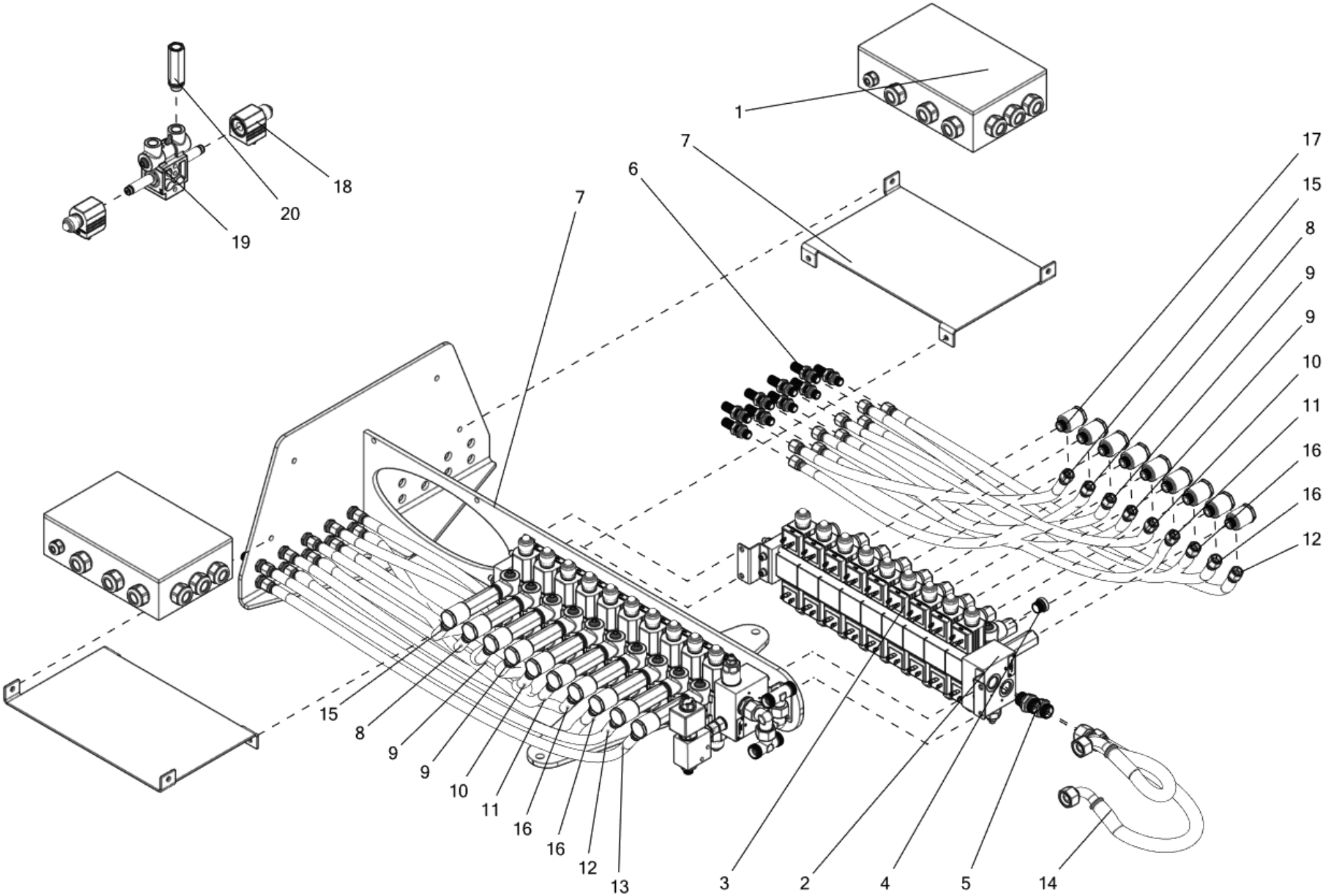
1
7
6
7
17
15
8
9
9
10
11
16
16
12
18
20
19
15
8
9
9
10
11
16
16
12
13
3
2
4
5
14

Fig.	Serial no.	Part no.	Quantity	Description **Tab.14.**
1		300007571	2	Control box
2		300007772	1	"Plug 1/4""(TN 185GG 1/4 R”)"
3		300008257	1	Hydraulic block 9 sections
4		300008368	9	"Plug 3/8""(TN 185GG 3/8 R”)"
5		300008369	2	"Adapter 1/2""/M22x1,5 ""(TN 92GG -15LR”)"
6		301044091	19	Fitting TA 102 - 8 L
7		303021244	2	Plate bended
8		330120027	2	Hydraulic hose 1/4" M14x1,5-0°-N / M14x1,5-0°-N L=600
9		330120028	4	Hydraulic hose 1/4" M14x1,5-0°-N / M14x1,5-0°-N L=650
10		330120029	2	Hydraulic hose 1/4" M14x1,5-0°-N / M14x1,5-0°-N L=700
11		330120030	2	Hydraulic hose 1/4" M14x1,5-0°-N / M14x1,5-0°-N L=750
12		330120031	2	Hydraulic hose 1/4" M14x1,5-0°-N / M14x1,5-0°-N L=850
13		330120032	1	Hydraulic hose 1/4" M14x1,5-0°-N / M14x1,5-0°-N L=900
14		330120044	2	Hydraulic hose 1/2" M22x1,5-0°-N / M22x1,5-90°-N L=400
15		330120047	2	Hydraulic hose 1/4" M14x1,5-0°-N / M18x1,5-0°-N L=550
16		330120048	4	Hydraulic hose 1/4" M14x1,5-0°-N / M18x1,5-0°-N
17		7000405785	9	SCREWED CONNECTION
18		300008381	2	Valve's coli
19		300008382	1	Valve's block
20		300008383	1	Speed control valve

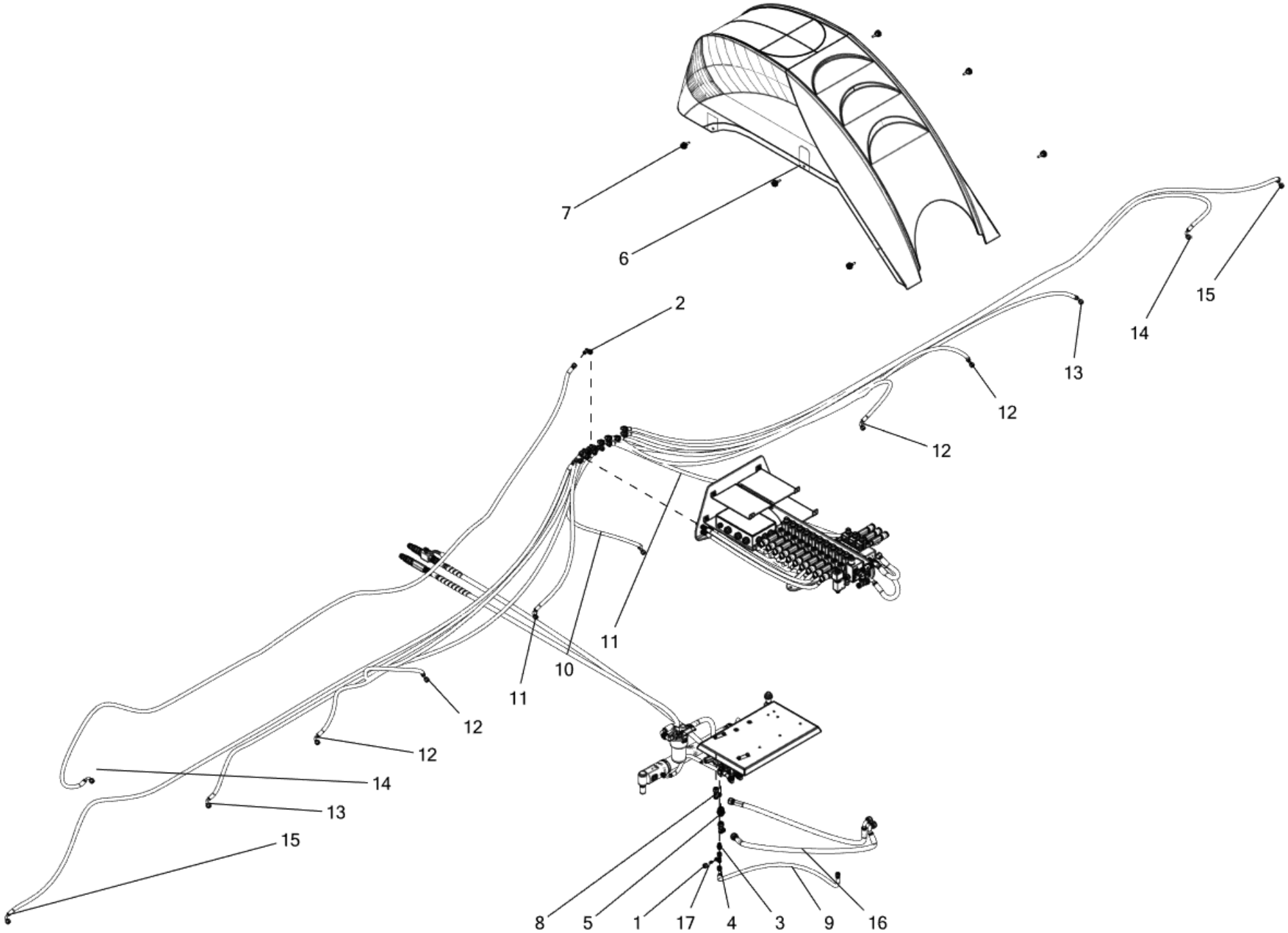
7
6
2
15
14
13
12
12
11
10
11
12
12
14
13
15
8
5
1
17
4
3
9
16

Fig.	Serial no.	Part no.	Quantity	Description **Tab. 15.**
1		200213856	1	UEWFMU AL8 D3870 8L ST-ZN /X VW
2		300007696	13	Angle adjustable
3		300007773	1	"Adapter 1/4""/M14x1,5 (TN92GG-08LR)"
4		300008314	1	Rotary fitting M14x1,5
5		300008319	1	"Adapter 3/4""/M22x1,5 (TN92GG-15LR 3/4”)"
6		303021225	1	Hydraulic cover
7		303021252	6	Cylinders plate
8		330020043	2	Asymmetric T fitting M22x1,5 ("TN 421-15L")
9		330120033	1	Hydraulic hose 1/4" M14x1,5-0°-N / M14x1,5-90°-N L=1100
10		330120034	1	Hydraulic hose 1/4" M14x1,5-0°-N / M14x1,5-90°-N L=1400
11		330120035	2	Hydraulic hose 1/4" M14x1,5-0°-N / M14x1,5-90°-N L=1700
12		330120037	4	Hydraulic hose 1/4" M14x1,5-0°-N / M14x1,5-90°-N L=2900
13		330120038	2	Hydraulic hose 1/4" M14x1,5-0°-N / M14x1,5-90°-N L=3400
14		330120041	2	Hydraulic hose 1/4" M14x1,5-0°-N / M14x1,5-90°-N L=4700
15		330120042	2	Hydraulic hose 1/4" M14x1,5-0°-N / M14x1,5-90°-N L=4900
16		330120045	2	Hydraulic hose 1/2" M22x1,5-0°-N / M22x1,5-90°-N L=1200
17		330130010	1	Plug TN 324 - 8L

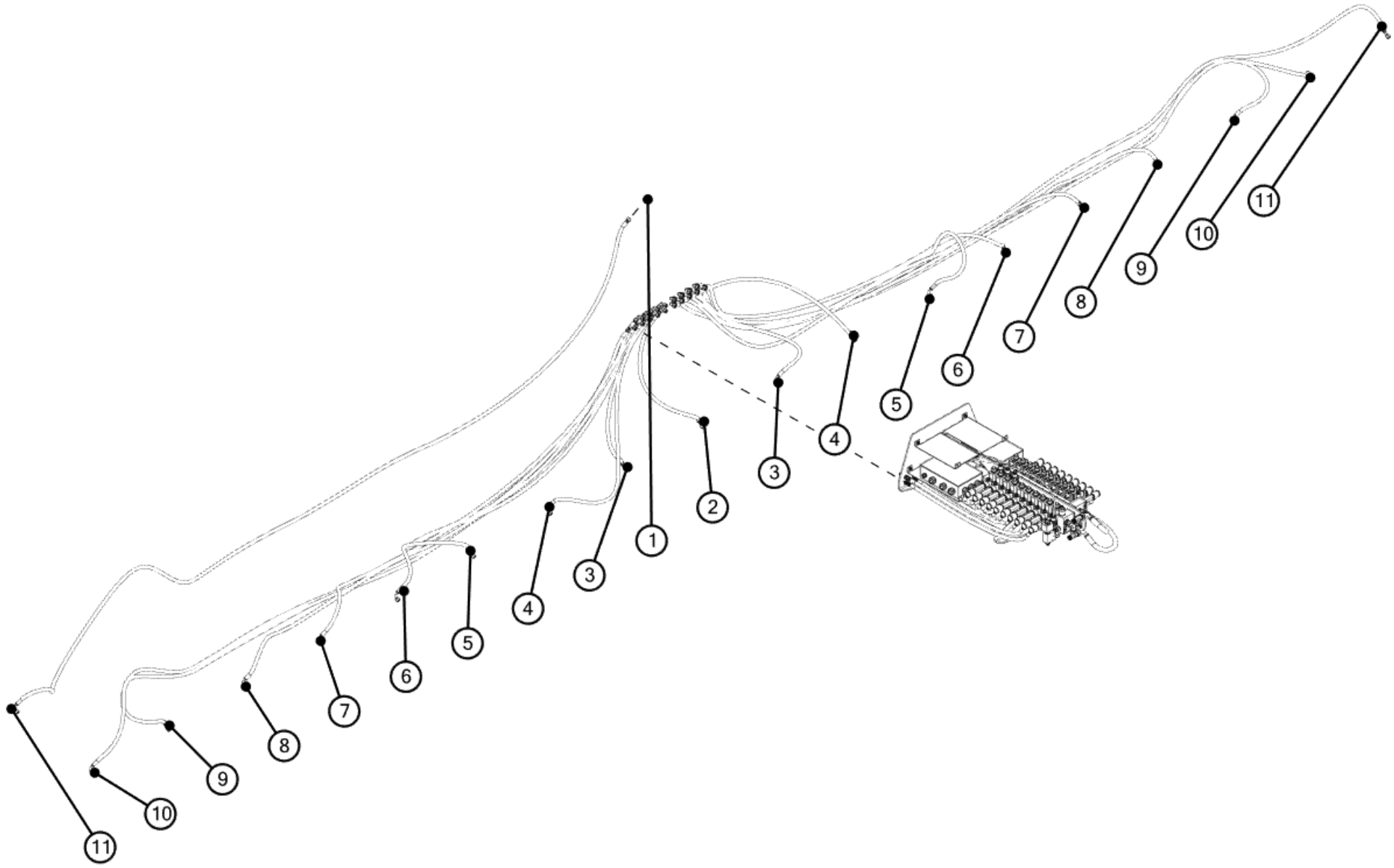
1
2
3
4
5
6
7
8
9
10
11
3
4
5
6
7
8
9
10
11

Fig.	Serial no.	Part no.	Quantity	Description **Tab. 16**
1		300007696	19	Angle adjustable
1		330120034	1	Hydraulic hose 1/4" M14x1,5-0°-N / M14x1,5-90°-N L=1400
2		330120035	2	Hydraulic hose 1/4" M14x1,5-0°-N / M14x1,5-90°-N L=1700
3		330120036	2	Hydraulic hose 1/4" M14x1,5-0°-N / M14x1,5-90°-N L=2400
4		330120037	2	Hydraulic hose 1/4" M14x1,5-0°-N / M14x1,5-90°-N L=2900
5		330120038	2	Hydraulic hose 1/4" M14x1,5-0°-N / M14x1,5-90°-N L=3400
6		330120039	2	Hydraulic hose 1/4" M14x1,5-0°-N / M14x1,5-90°-N L=3700
6		330120040	2	Hydraulic hose 1/4" M14x1,5-0°-N / M14x1,5-90°-N L=4500
7		330120041	2	Hydraulic hose 1/4" M14x1,5-0°-N / M14x1,5-90°-N L=4700
7		330120042	2	Hydraulic hose 1/4" M14x1,5-0°-N / M14x1,5-90°-N L=4900
8		330120043	2	Hydraulic hose 1/4" M14x1,5-0°-N / M14x1,5-90°-N L=5300

Vision system

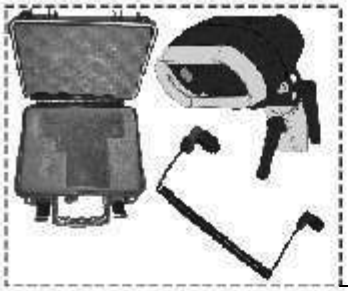
1

2

3

4

5

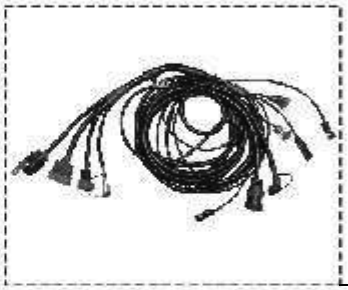
6

7

8

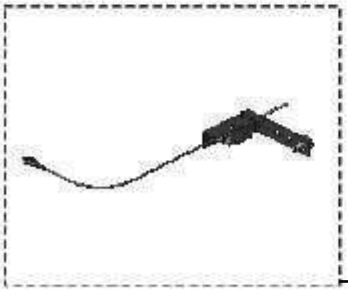
9

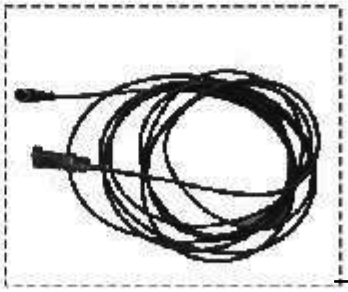
10

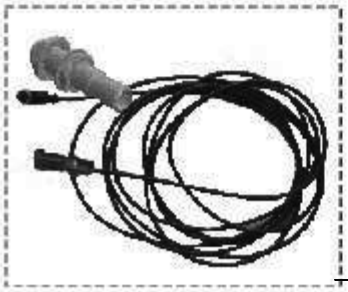
11

Fig.	Serial no.	Part no.	Quantity	Description	**Tab. 17**
1		300007779	1	Stereo camera MK3	
2		330250002	1	Stereo camera MK4	
3		300007778	1	Monitor panel	
4		300007790	1	Camera box	
5		300007791	1	Coiled cable MK3	
6		330230004	1	Coiled cable MK4	
7		300007793	1	Tractor harness MK3	
8		330230002	1	Tractor harness MK4	
9		300007794	1	Implement harness MK3	
10		330230001	1	Implement harness MK4	
11		330020098	1	Aluminium Profile 50x50 L=1000	
12		330290001	1	Implement sensor with bracket	
13		330230003	1	Speed sensor cable 5m; Superseal	
14		330270001	1	Speed Sensor-Side shift electronics-VCO-I	

System overview for 13 Sections with Trimble.

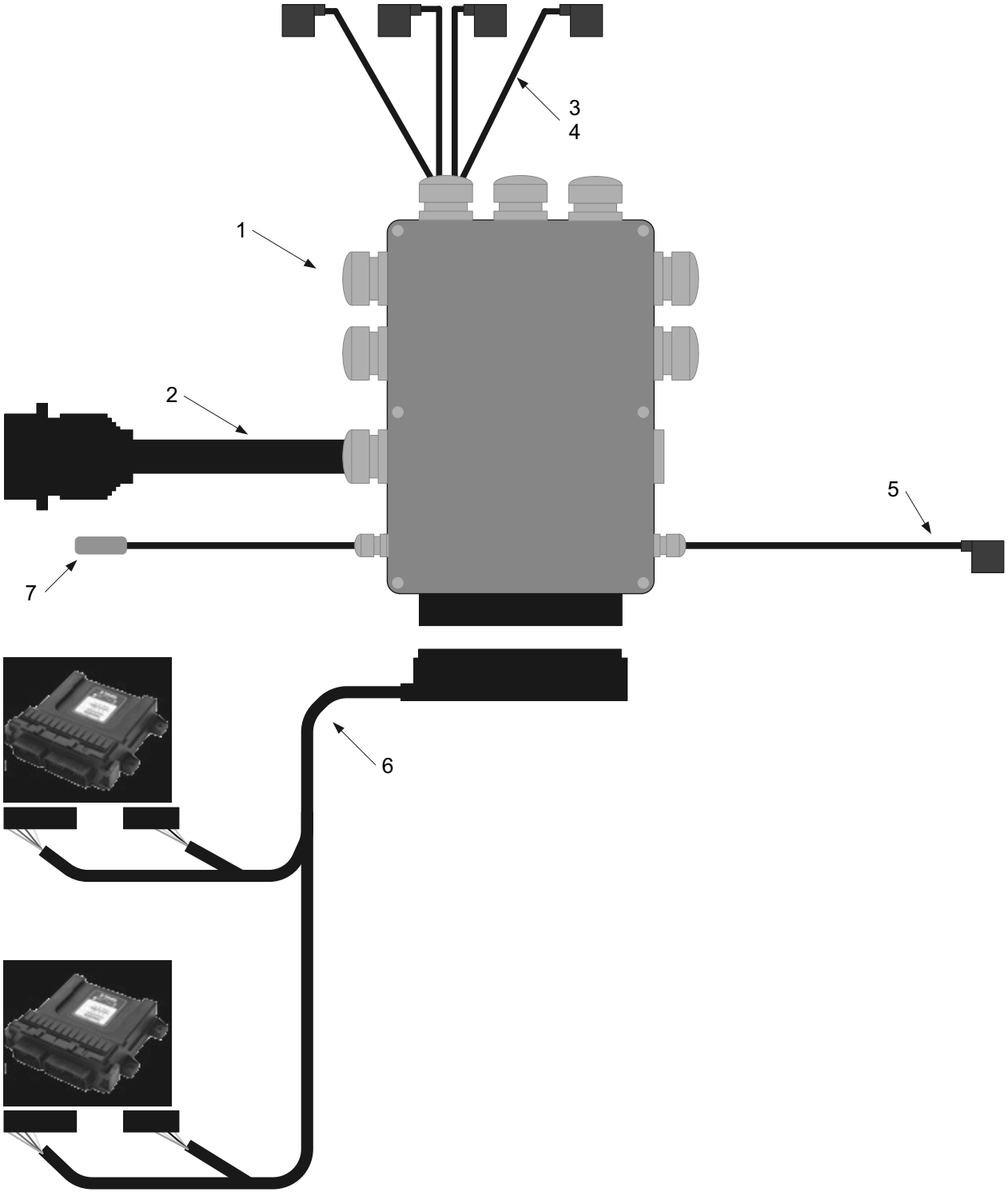

Fig.	Serial no.	Part no.	Quantity	Description **Tab.18.**
1		300007571	1	Tricon controller K18-9171-A01
2		300007576	1	Tricon ISOBUS cable
3		300008372	1	Valve cable for 2 valves - VCO-I
4		300008373	6	Valve cable for 4 valves - VCO-I
5		300008302	1	Bypass valve cable -K18-9171-W17
6		300008203	1	Converter Cable for 2 TopCon boxes (20 sections)
7		310000007	1	Reed switch sensor with cable 2,70

System overview for 13 Sections with Topcon

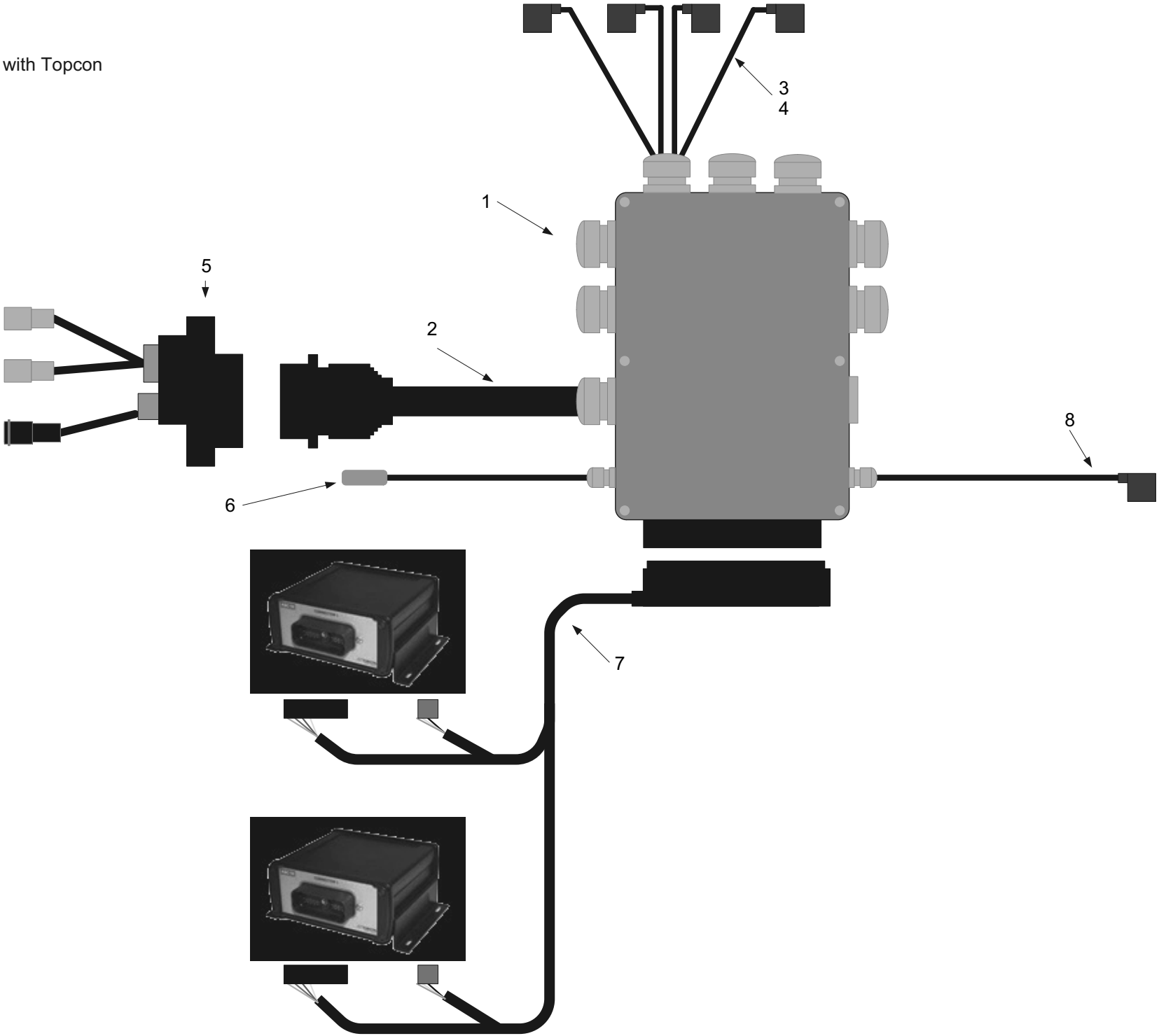

Fig.	Serial no.	Part no.	Quantity	Description	**Tab. 19.**
1		300007571	1	Tricon controller K18-9171-A01	
2		300007576	1	Tricon ISOBUS cable	
3		300008372	1	Valve cable for 2 valves - VCO-I	
4		300008373	6	Valve cable for 4 valves - VCO-I	
5		300008202	1	”ISOBUS” tractor side connector with harness	
6		310000007	1	Reed switch sensor with cable 2,70	
7		300008203	1	Converter Cable for 2 TopCon boxes (20 sections)	
8		300008302	1	Bypass valve cable -K18-9171-W17	

System overview for 13 Sections with Agleader

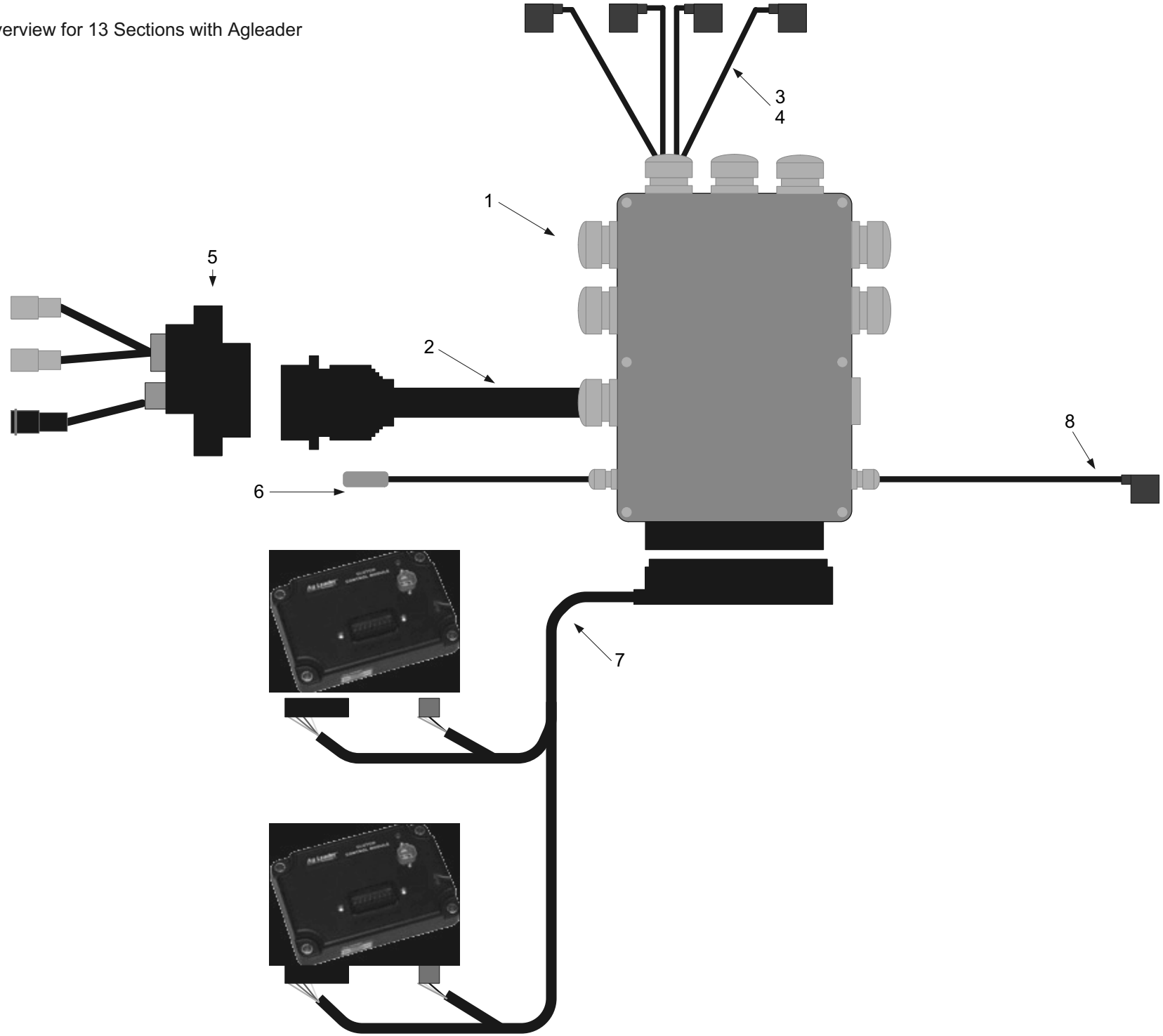

Fig.	Serial no.	Part no.	Quantity	Description **Tab. 20**
1		300007571	1	Tricon controller K18-9171-A01
2		300007576	1	Tricon ISOBUS cable
3		300008372	1	Valve cable for 2 valves - VCO-I
4		300008373	6	Valve cable for 4 valves - VCO-I
5		300008202	1	”ISOBUS” tractor side connector with harness
6		310000007	1	Reed switch sensor with cable 2,70
7		300008204	1	Converter Cable for 2 Agleader boxes (24 sections)
8		300008302	1	Bypass valve cable -K18-9171-W17

System overview for 19 Sections with Trimble.

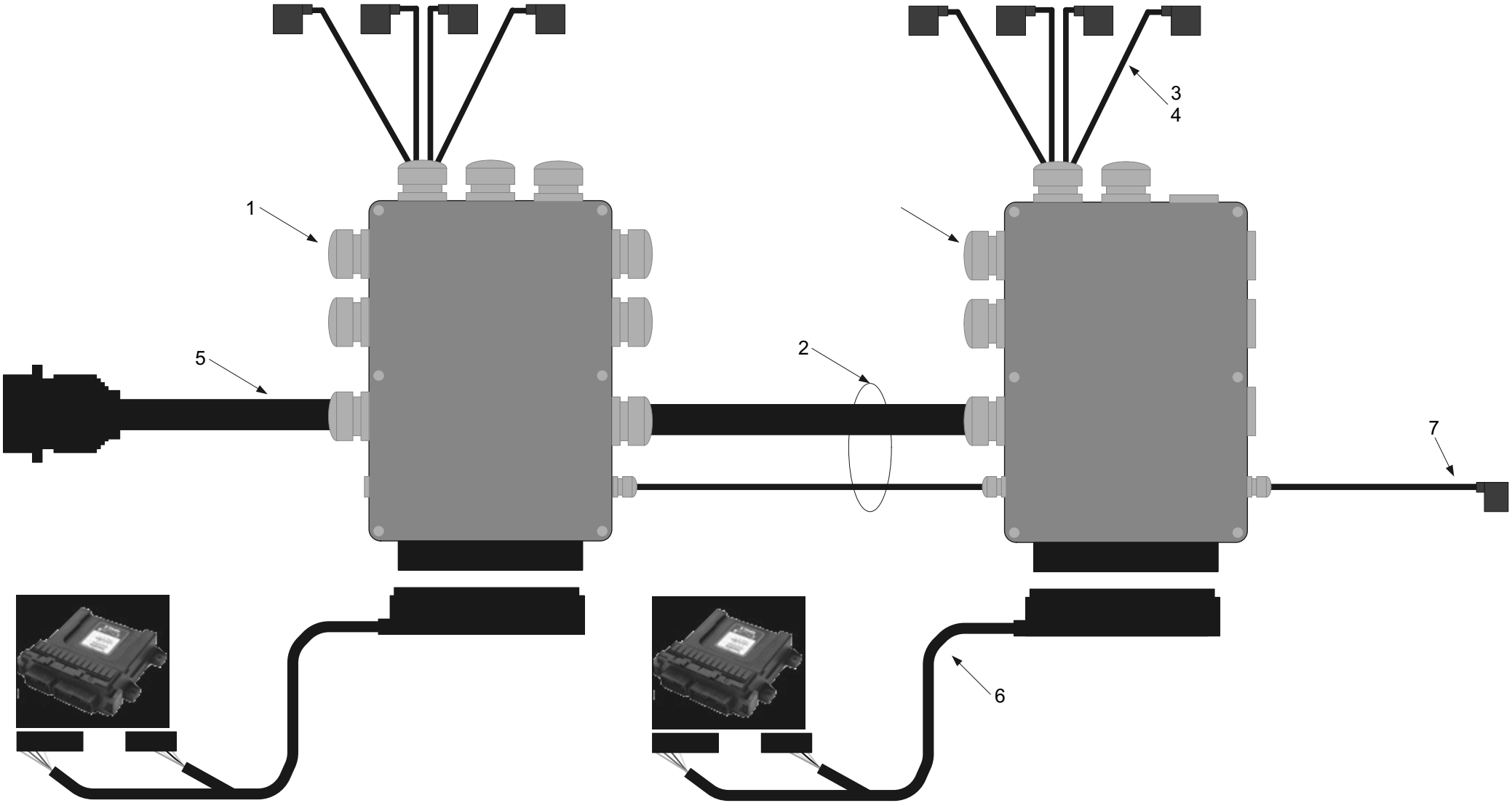

Fig.	Serial no.	Part no.	Quantity	Description	**Tab. 21.**
1		300007571	2	Tricon controller K18-9171-A01	
2		300007577	1	Tricon link cable	
3		300008372	1	Valve cable for 2 valves - VCO-I	
4		300008373	9	Valve cable for 4 valves - VCO-I	
5		300007576	1	Tricon ISOBUS cable	
6		300007753	2	Converter cable for Trimble (9sections)	
7		300008302	1	Bypass valve cable -K18-9171-W17	

System overview for 19 Sections with Topcon.

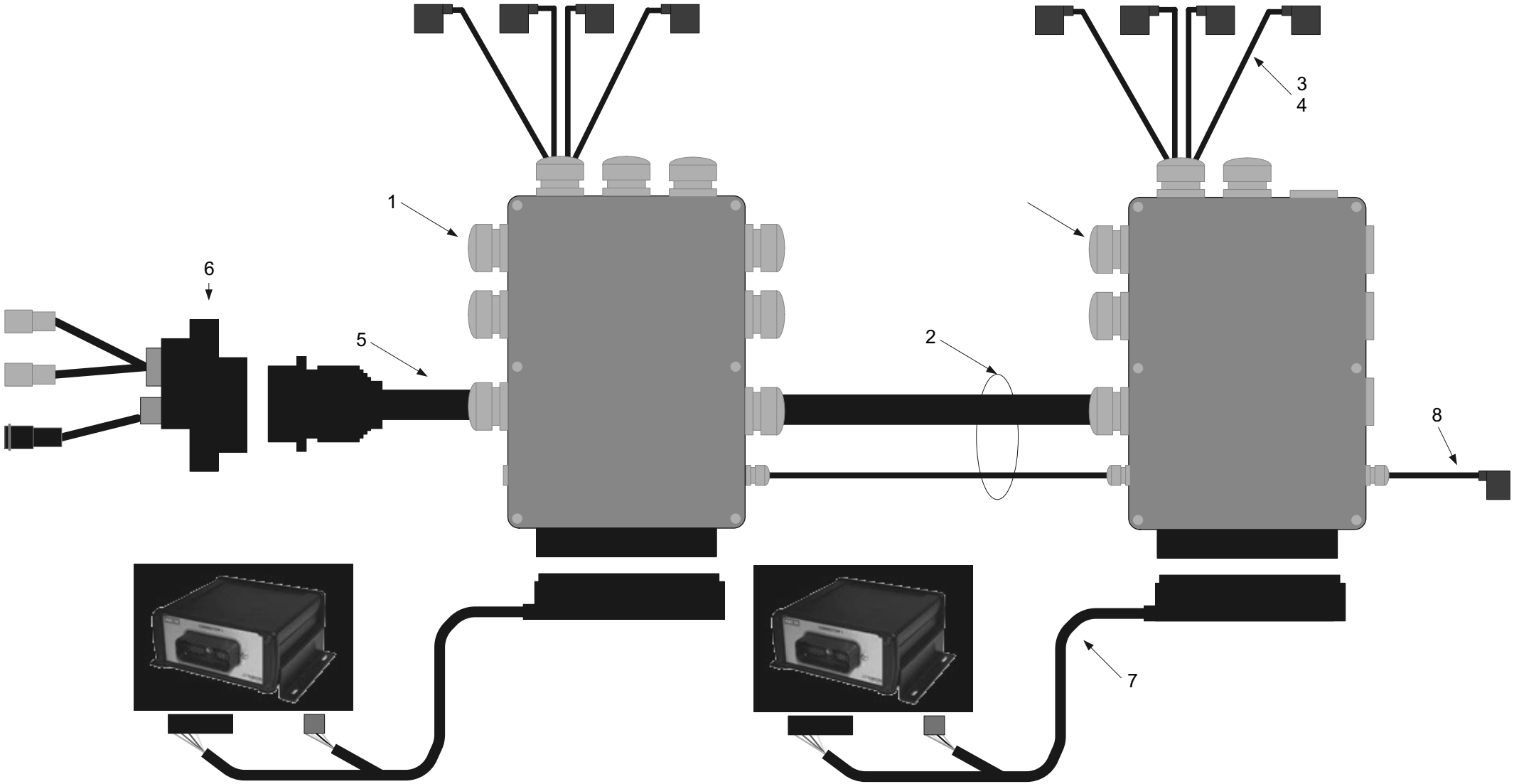

Fig.	Serial no.	Part no.	Quantity	Description **Tab.22.**
1		300007571	2	Tricon controller K18-9171-A01
2		300007577	1	Tricon link cable
3		300008372	1	Valve cable for 2 valves - VCO-I
4		300008373	9	Valve cable for 4 valves - VCO-I
5		300007576	1	Tricon ISOBUS cable
6		300008202	1	”ISOBUS” tractor side connector with harness
7		300007751	2	Converter cable for TopCon
8		300008302	1	Bypass valve cable -K18-9171-W17

System overview for 19 Sections with Agleader.

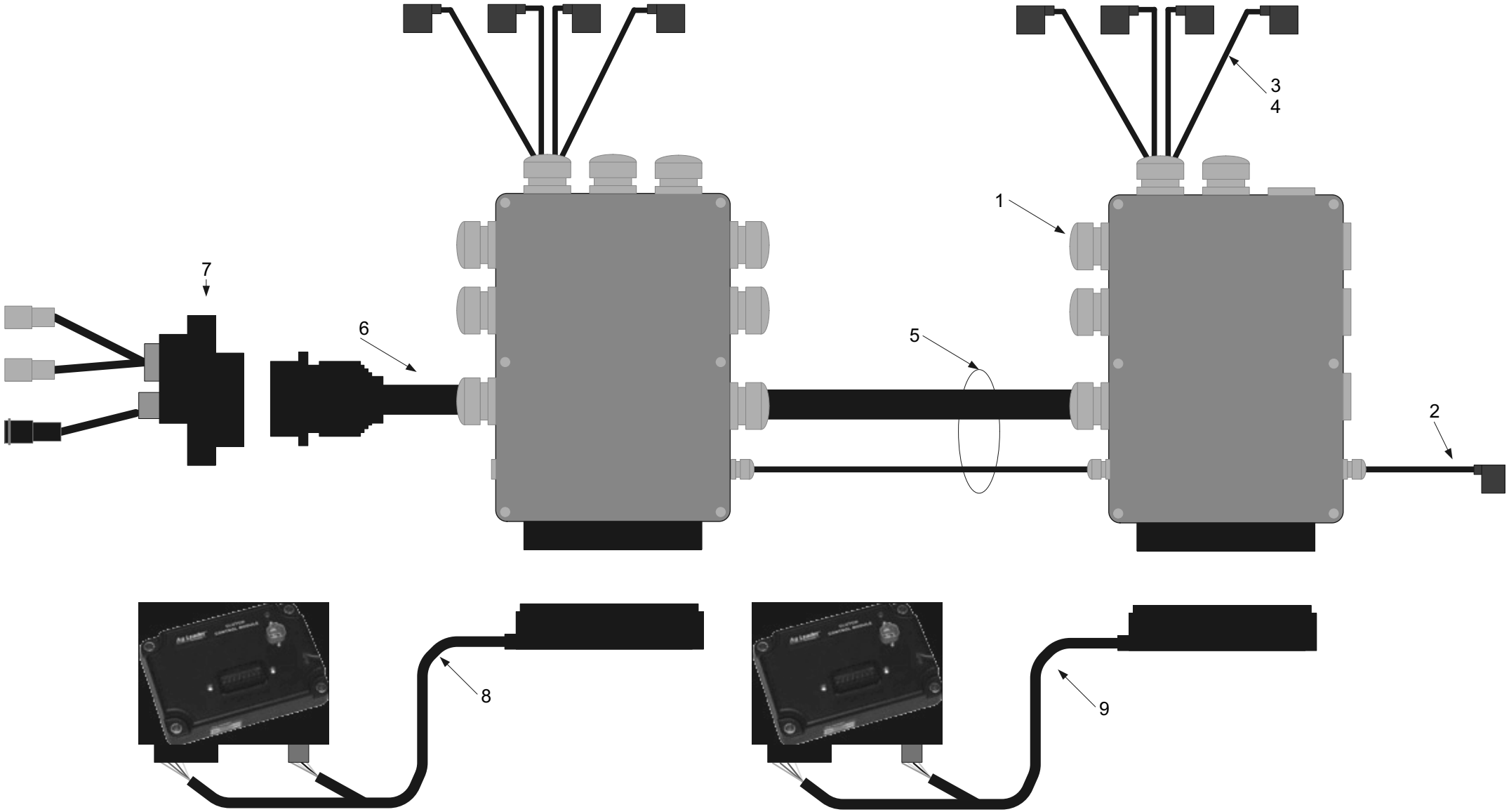

Fig.	Serial no.	Part no.	Quantity	Description **Tab. 23.**
1		300007571	2	Tricon controller K18-9171-A01
2		300008302	1	Bypass valve cable -K18-9171-W17
3		300008372	1	Valve cable for 2 valves - VCO-I
4		300008373	9	Valve cable for 4 valves - VCO-I
5		300007577	1	Tricon link cable
6		300007576	1	Tricon ISOBUS cable
7		300008202	1	”ISOBUS” tractor side connector with harness
8		303021245	1	Converter cable for Agleader K18-9171-W21
9		303021246	1	Converter cable for Agleader K18-9171-W22

Valid from serial number: I Gültig ab Seriennummer:

Valable á partir de numéro de série: I Gyldig fra serienummer:

A17-0620-40150001

24.11.2015

adding value
to the green world

You can always find the latest version of the manuals at www.kongskilde.com