KONGSKILDE *spare parts list*

Listino di prezzi de ricambio

Lista de piezas de recambio

Liste de pièce de rechange

Reservedelsliste

Onderdelenlijst

Varaosaluettelo

Reservdelslista

Ersatzteilliste

90 100 868 Printed in Denmark by Sorø Bogtrykkeri ApS.

KONGSKILDE *spare parts list*

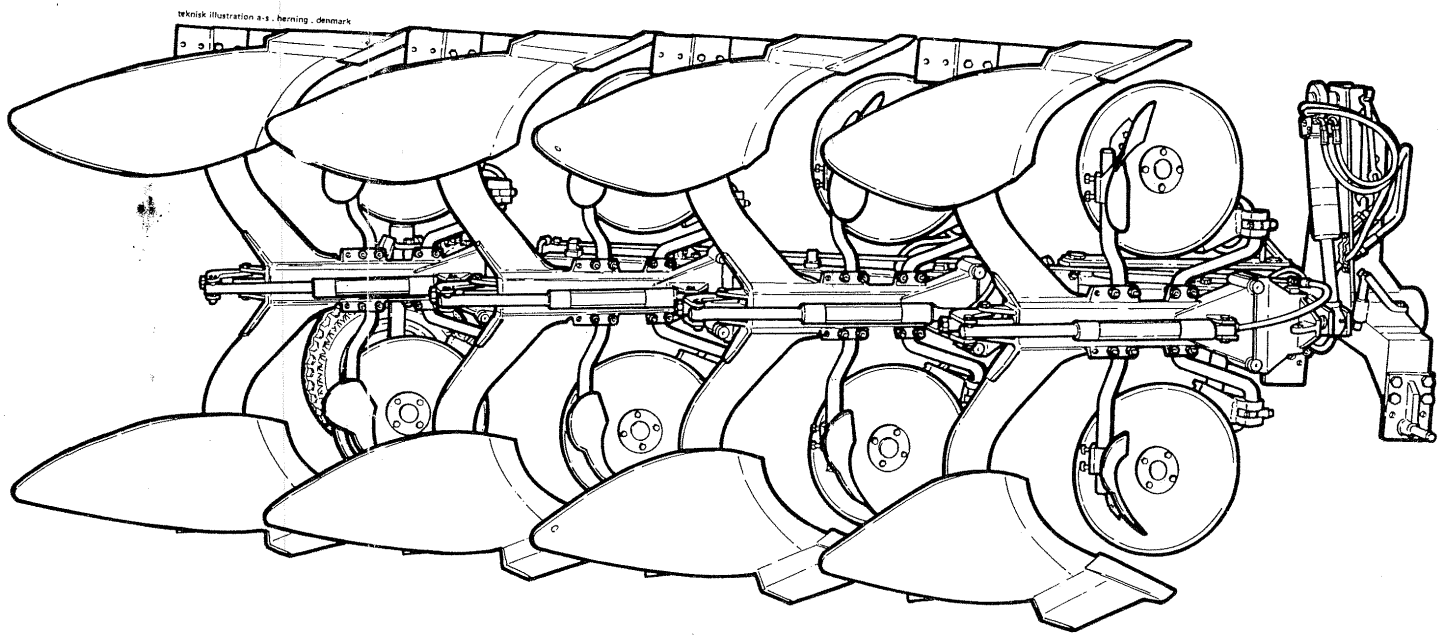

Vari-Flex VPS & VPU

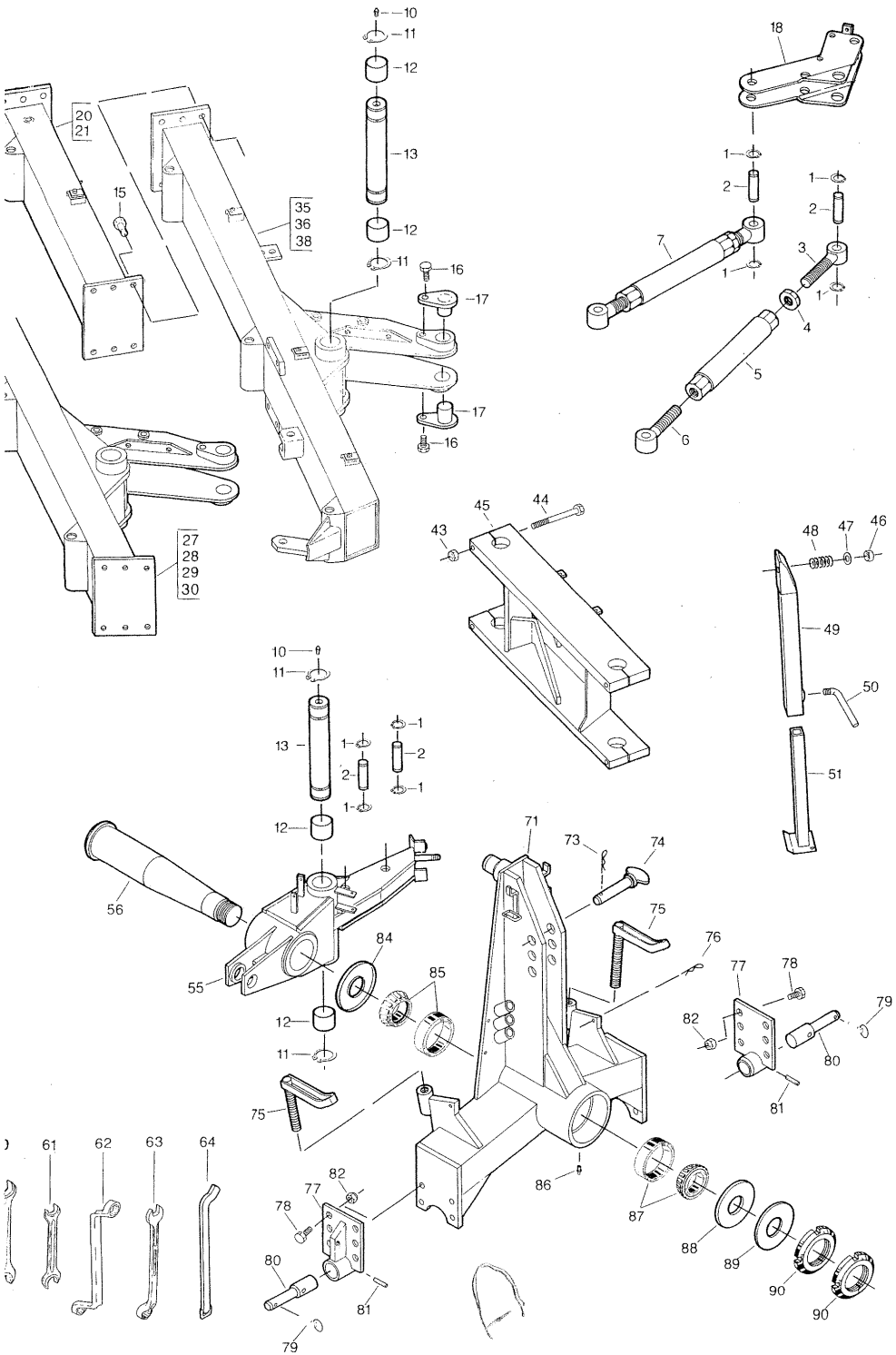

Fig.	Pack	Serial no.	Part no.	Pieces	Notes
1			00 407 014	8	Circlip ø25 x 1.2 mm
2			90 100 143	4	Pin for sidespindle
3			90 100 285	1	Treaded end, right
4			90 100 138	1	Counter nut M33 x 2 mm
5			90 102 017	1	Sidespindle
6			90 100 286	1	Treaded end, left
7			90 103 023	2	Sidespindle complete, incl. items 3 - 6
10			00 421 001	2	Grease nipple M6
11			00 407 037	4	Circlip ø50 x 2 mm
12			00 323 164	4	Bushing
13			90 100 136	2	Pivot frame pin
14			00 316 006	6	Lock nut M16
15			00 306 056	6	Steel bolt M16 x 40 mm
16			00 308 004	2	Steel set screw M10 x 20 mm
17			90 102 700	2	
18			90 102 707	1	
20			90 102 003	1	Extension frame 80 cm - VPS/VPU
21			90 102 004	1	Extension frame 90 cm - VPS/VPU
27			90 102 726	1	Main frame 3 - furrow, 80 cm - VPS
28			90 102 728	1	Main frame 4 - furrow, 80 cm - VPS
29			90 102 727	1	Main frame 3 - furrow, 90 cm - VPS
30			90 102 729	1	Main frame 4 - furrow, 90 cm - VPS
35			90 102 722	1	Main frame 3 - furrow, 80 cm - VPU
36			90 102 724	1	Main frame 4 - furrow, 80 cm - VPU
38			90 102 725	1	Main frame 4 - furrow, 90 cm - VPU
43			00 316 006	2	Lock nut M16
44			00 306 095	2	Steel bolt M 16 x 140 mm
45			90 102 705	1	Main frame connection
46			00 316 006	2	Lock nut M16
47			00 331 056	2	Flat washer M16
48			90 410 002	2	Spring
49			90 102 720	1	Supporting leg, top part
50			90 090 133	1	Handle
51			90 102 009	1	Supporting leg, bottom part
55			90 898 069	1	Pivot frame
56			90 100 145	1	Main axle
60			00 323 267	1	Open-end spanner 41 x 46 mm
61			00 323 266	1	Open-end spanner 30 x 36 mm
62			00 323 155	1	Ring spanner 22 x 24 mm
63			00 323 265	1	Ring and open-end spanner 19 mm
64			00 102 055	1	
Cpl			90 273 005	1	Set of spanners, incl. items 60 - 64
70			00 333 033	2	Hair pin clip ø5 mm
71			90 898 068	1	Headstock
72			90 100 212	1	Spacer
73			00 333 069	1	Lynch pin ø 8 mm
74			90 102 054	1	Headstock pin
75			90 102 018	2	Spindle for side adjustment
76			00 333 033	2	Hair pin clip ø5 mm
77			90 102 070	2	Cross shaft
78			00 306 119	8	Steel bolt M20 x 55 mm
79			00 333 014	2	Lynch pin ø9.5 mm
80			90 100 273	2	Draw pin
81			00 333 020	2	Slotted spring pin ø12 x 60 mm
82			00 316 007	8	Lock nut M20
83			00 333 033	2	Hair pin clip ø5 mm
84			00 413 103	1	Seal plate
85			00 402 012	1	Cone roller bearing # 33 018
86			00 421 000	1	Grease nipple M6
87			00 402 011	1	Cone roller bearing # 32 313
88			00 413 102	1	Seal plate
89			90 100 132	1	Cap
90			00 323 187	2	Ring nut M60 x 2 mm

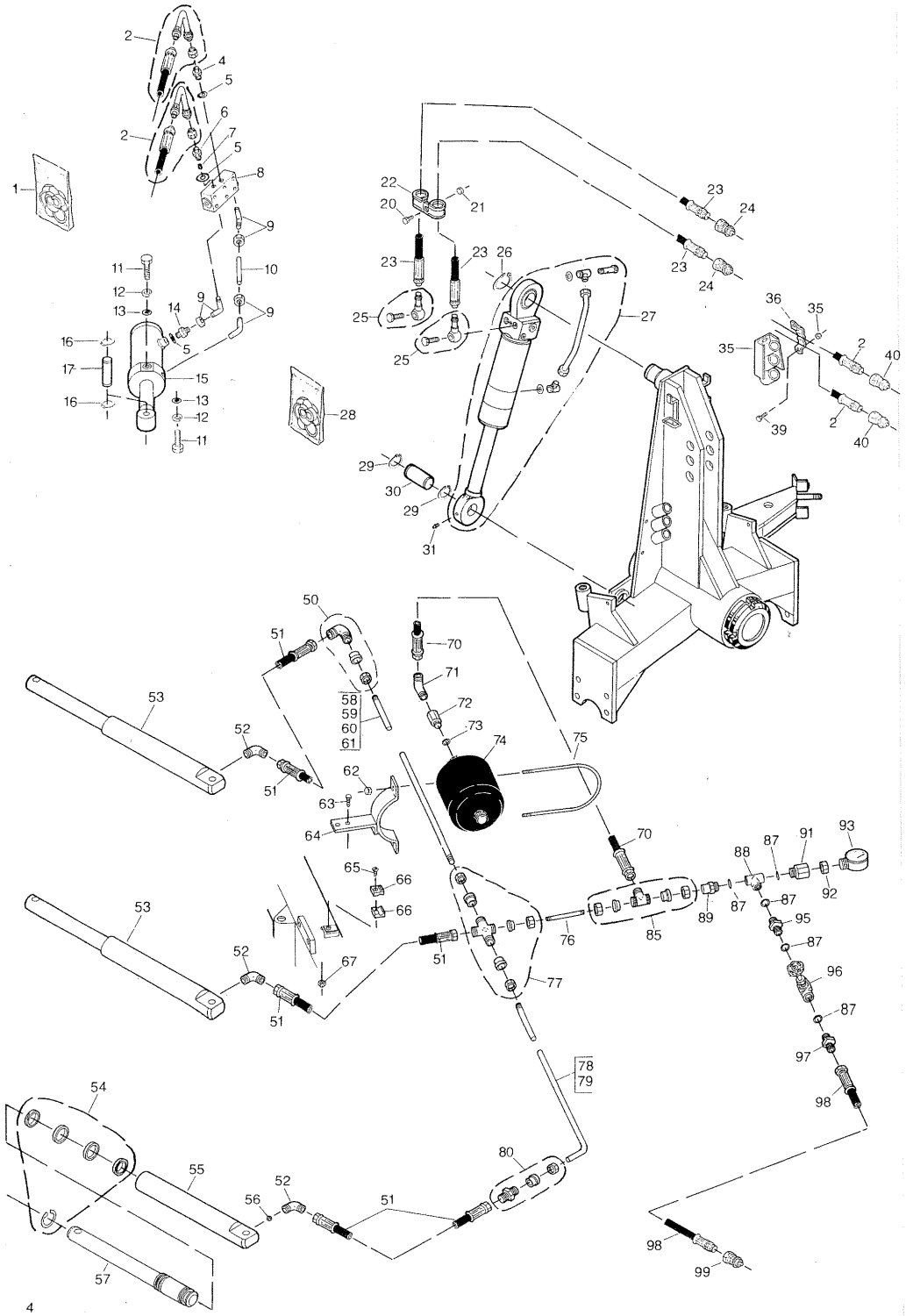

Fig.	Pack	Serial no.	Part no.	Pieces	Notes
1			01 000 350		Seal kit complete
2			90 460 106		Hose assy. 2900 mm
4			00 420 082		
5			00 413 105		Copper washer ø23/18 x 1.5 mm
6			90 100 823		
7			90 100 825		Nozzle
8			90 460 053		
9			00 420 073		
10			90 100 822		
11			00 306 055		Steel set screw M16 x 40 mm
12			00 323 207		Spring washer M16
13			90 030 018		Bushing
14			00 420 072		
15			90 470 016		
16			00 407 014		Circlip ø25 x 1.2 mm
17			90 100 143		Pin
20			00 308 001		Steel bolt M6 x 10 mm
21			00 315 028		Nut M6
22			00 420 089		
23			90 460 099		Hose assy. 1400 mm
24			00 420 042		
25			00 420 086		
26			00 407 036		Circlip ø40 x 1.75 mm
27			90 470 002		Cylinder complete
28			90 473 000		Seal kit complete
29			00 407 009		Circlip ø35 x 1.5 mm
30			90 100 134		Pin
31			00 421 000		Grease nipple M6
35			90 102 050		
36			90 100 153		
37			00 316 044		Nut M8
39			00 308 003		Steel set screw M8 x 30 mm
40			00 420 042		
50			00 420 092		
51			90 460 091		Hose assy. 550 mm
52			00 420 073		
53			90 060 558		Trip cylinder complete
54		90 070 422	90 070 246		Seal kit complete
55			90 070 260		Cylinder tube
56			90 070 257		Restrictor
57			90 070 255		Piston rod
58			90 100 146		
59			90 100 147		
60			90 100 148		80 cm
61			90 100 149		90 cm
62			00 315 013		Steel nut M10
63			00 308 003		Steel set screw M8 x 30 mm
64			90 102 737		
65			00 323 140		Hex-socket cap screw M6 x 25 mm
66			00 420 096		
67			00 316 044		Lock nut M8
70			90 460 093		Hose assy. 800 mm
71			00 420 073		
72			00 420 097		
73			00 413 106		Copper washer ø32/26 x 1.5 mm
74			00 420 101		
75			00 420 019		
76			90 100 152		
77			00 420 091		
78			90 100 150		80 cm
79			90 100 151		90 cm
80			00 420 094		
85			00 420 090		
87			00 413 055		Copper washer ø22/17 x 1.5 mm
89			00 420 093		
91			00 420 072		
92			90 070 250		
93			00 420 095		Pressure gauge
95			00 420 045		
96			00 420 099		
97			00 420 082		
98			90 460 110		Hose assy. 2900 mm
99			00 420 042		

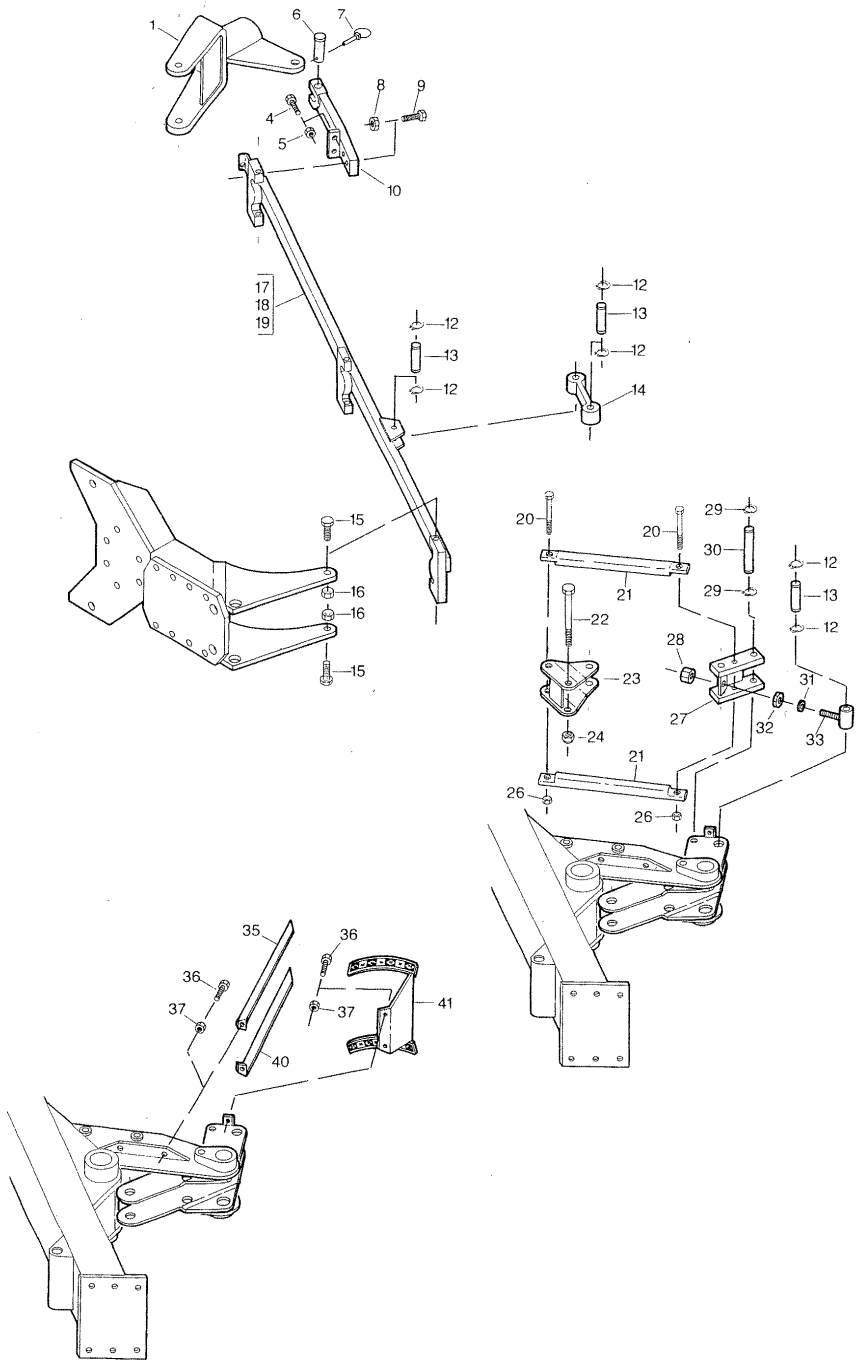

Fig.	Pack	Serial no.	Part no.	Pieces	Notes
1			90 102 704		Console for wheel
4			00 308 015		Steel set screw M12 x 45 mm
5			00 316 046		Lock nut M12
6			90 090 087		Pin
7			00 333 068		Lynch pin ø4.5 mm
8			00 316 046		Lock nut M12
9			00 304 036		Set screw M12 x 45 mm
10			90 102 721		
12			00 407 042		Circlip ø16 x 1.0 mm
13			90 100 727		Pin ø16 x 78 mm
14			90 102 719		
15			90 100 778		Special bolt M16
16			00 315 020		Steel nut M16
17			90 102 710		Console connection for 3-furrow, 80 cm VPU
18			90 102 708		Console connection for 4-furrow, 80 cm VPU
19			90 102 709		Console connection for 4-furrow, 90 cm VPU
20			90 300 043		Bolt M16 x 145 mm
21			90 100 722		
22			90 300 044		Bolt M20 x 145 mm
23			90 102 702		
24			00 316 048		Lock nut M20
26			00 316 047		Lock nut M16
27			90 102 732		
28			90 100 754		
29			00 407 042		Circlip ø16 x 1.0 mm
30			90 100 728		Pin ø16 x 109 mm
31			00 316 018		Counter nut M16
32			00 316 036		Counter nut M24
33			90 102 718		
35			90 100 783		
36			00 308 002		Steel set screw M8 x 25 mm
37			00 316 044		Lock nut M8
40			90 100 784		
41			90 102 738		

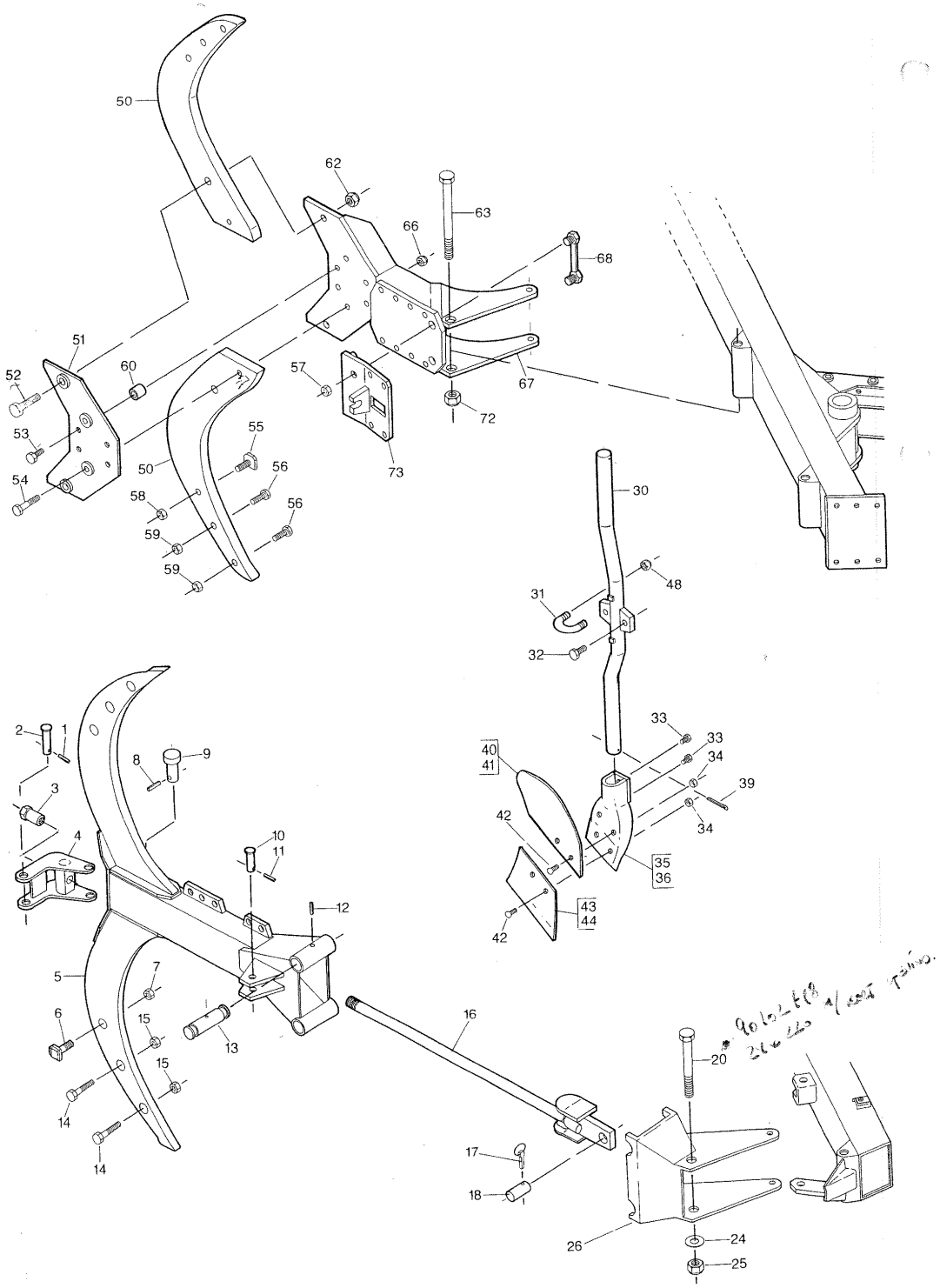

Fig.	Pack	Serial no.	Part no.	Pieces	Notes
1			00 333 050		Slotted spring pin ø5 x 40 mm
2			90 090 066		Pin
3			90 100 137		
4			90 102 750		
5			90 103 006		
6			00 323 201		
7			00 315 020		Steel nut M16
8			00 333 050		Slotted spring pin ø5 x 40 mm
9			90 100 278		Pin
10			90 100 139		Pin
11			00 333 050		Slotted spring pin ø5 x 40 mm
12			00 333 050		Slotted spring pin ø5 x 40 mm
13			90 100 135		
14			00 323 201		Steel bolt M16 x 55 mm
15			00 316 047		Lock nut M16
16			90 102 037		
17			00 333 069		Lynch pin ø8 mm
18			90 100 142		
20			90 102 748		Special bolt M24
24			00 331 058		Flat washer M24
25			00 316 010		Lock nut M24
26			90 102 706		
30			90 102 032		Shank for skimmer
31			90 100 144		U-clamp
32			00 308 009		Steel bolt M16 x 45 mm
33		90 340 000	90 340 049		Steel bolt M16 x 25 mm
34			00 315 021		Steel nut M10
35			90 102 033		Frog for skimmer, right
36			90 102 034		Frog for skimmer, left
39			00 333 065		Split pin ø5 x 50 mm
40			90 898 063		Mouldboard for skimmer, right
41			90 898 064		Mouldboard for skimmer, left
42			00 323 240		Plough bolt M10 x 25 mm
43			90 898 061		Share for skimmer, right
44			90 898 062		Share for skimmer, left
48			00 316 006		Lock nut M16
50			90 100 519		Leg
51			90 102 504		Flange
52			00 306 121		Steel bolt M20 x 75 mm
53			00 308 009		Steel bolt M16 x 45 mm
54			00 323 257		Share bolt M14 x 70 mm
55			00 323 201		
56			00 306 120		
57			00 316 006		Lock nut M16
58			00 315 020		Steel nut M16
59			00 316 047		Lock nut M16
60			90 100 518		Spacer
62			00 316 048		Lock nut M20
63			90 102 748		Special bolt M24
66			00 316 006		Lock nut M16
67			90 102 736		Furrow console
68			90 102 508		Support block bolt
72			00 316 010		Lock nut M24
73			90 102 501		Support block

VPS & VPU

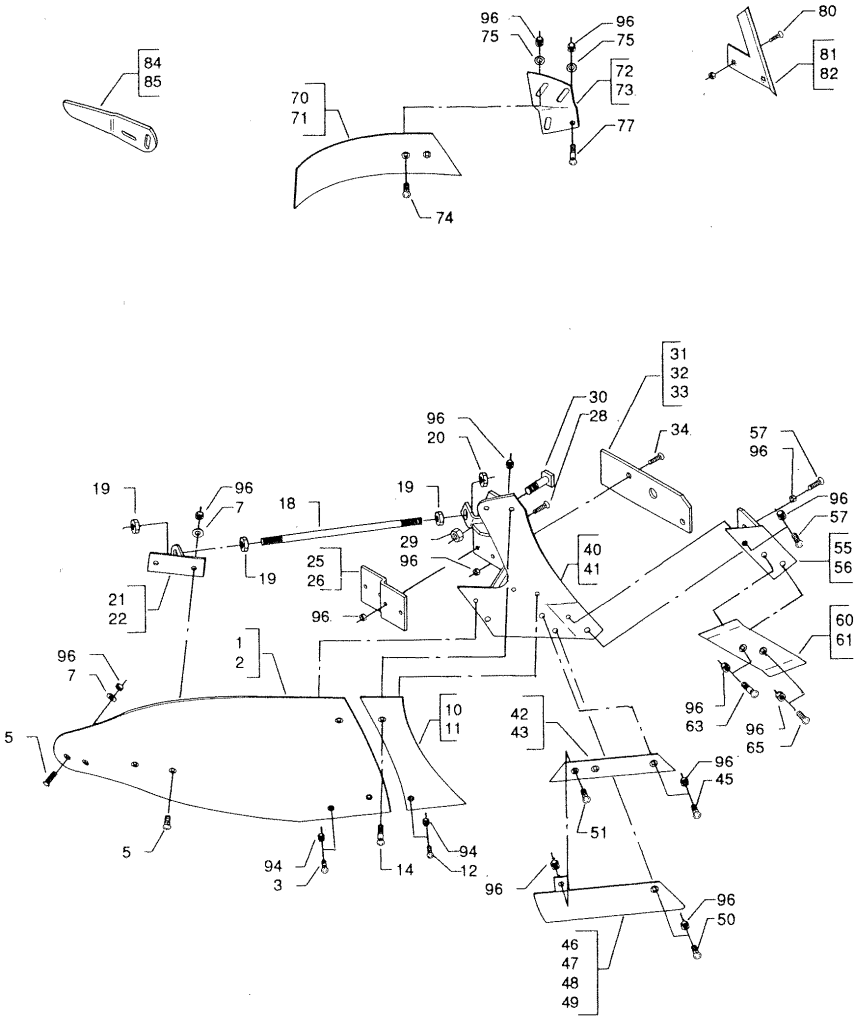

Fig.	Pack	Serial no.	Part no.	Pieces	Notes
1			90 210 000	1	Mouldboard, right
2			90 210 001	1	Mouldboard, left
3			00 323 243	2	Plough bolt w. 2 noses incl. nut, M10 x 25 mm
5			00 323 244	5	Plough bolt w. 2 noses incl. nut, M12 x 30 mm
7			00 331 043	2	Flat washer M12
Cpl			90 063 160	1	Mouldboard right complete incl. items 1,3,5 & 7
Cpl			90 063 169	1	Mouldboard left complete incl. items 2,3,5 & 7
10			90 210 002	1	Mouldboard shin, right
11			90 210 003	1	Mouldboard shin, left
12			00 323 243	1	Plough bolt w. 2 noses incl. nut, M10 x 25 mm
14			00 323 244	1	Plough bolt w. 2 noses incl. nut, M12 x 30 mm
Cpl			90 063 161	1	Mouldboard shin right complete incl. items 10,12 & 14
Cpl			90 063 170	1	Mouldboard shin left complete incl. items 11,12 & 14
18			90 250 003	1	Mouldboard brace
19			00 315 019	3	Nut M20
20			00 316 017	1	Counter nut M20
21			90 062 105	1	Brace bracket, right
22			90 062 110	1	Brace bracket, left
25			90 063 163	1	Tail piece for landside, 210 mm
26			90 060 349	1	Tail piece for landside, 150 mm
28			00 323 226	2	Plough bolt incl. nut, M12 x 35 mm
29			00 316 047	1	Lock nut M16
30			00 323 201	1	Special bolt M16 x 55 mm
31			90 230 020	1	Landside standard, 320 mm
32			90 063 347	1	Landside, 465 mm
33			90 060 348	1	Landside, 600 mm
34			00 323 226	2	Plough bolt incl. nut, M12 x 35 mm
40			90 062 102	1	Frog, right
41			90 060 111	1	Frog, left
42			90 060 184	1	Share upper part, right
43			90 060 188	1	Share upper part, left
45			00 323 225	3	Plough bolt incl. nut, M12 x 30 mm
46			90 062 103	1	Share lower part 14", right
47			90 062 107	1	Share lower part 14", left
48			90 062 106	1	Share lower part 16", right
49			90 062 108	1	Share lower part 16", left
50			00 323 233	1	Plough bolt conic incl. nut, M12 x 28 mm
55			90 062 104	1	Front frog extension, right
56			90 062 109	1	Front frog extension, left
57			00 323 226	3	Plough bolt incl. nut, M12 x 35 mm
60			90 060 185	1	Reversible point, right
61			90 060 189	1	Reversible point, left
63			00 323 236	1	Plough bolt conic incl. nut, M12 x 40 mm
65			00 323 234	1	Plough bolt conic incl. nut, M12 x 32 mm
70			90 060 203	1	Coverboard blade, right
71			90 060 204	1	Coverboard blade, left
72			90 060 201	1	Coverboard bracket, right
73			90 060 202	1	Coverboard bracket, left
74			00 323 226	2	Plough bolt incl. nut, M12 x 35 mm
75			00 331 043	4	Flat washer M12
77			00 323 249	2	Plough bolt w. 2 noses incl. nut,M12 x 40 mm
80			00 323 228	2	Plough bolt w. square shoulder incl. nut, M12 x 40 mm
Cpl			90 063 178	1	Landside share right w. bolts, incl items 80 & 81
Cpl			90 063 179	1	Landside share left w. bolts, incl. items 80 & 82
84			90 060 207	1	Mouldboard tail piece, right
85			90 060 208	1	Mouldboard tail piece, left
94			00 315 013	-	Steel nut M10
96			00 315 016	-	Steel nut M12

VPS & VPU

T 85/28 & T 85/38

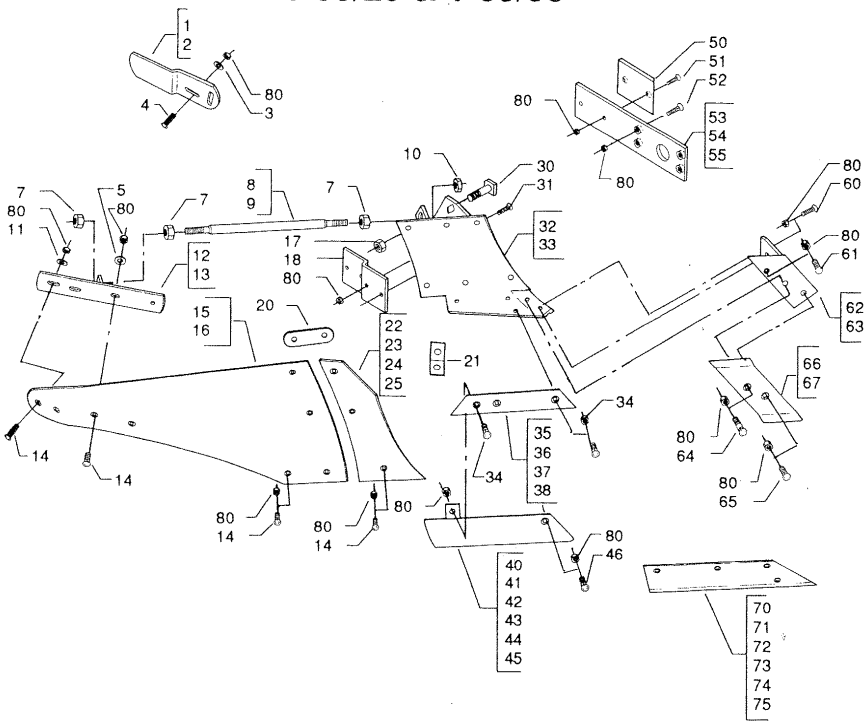

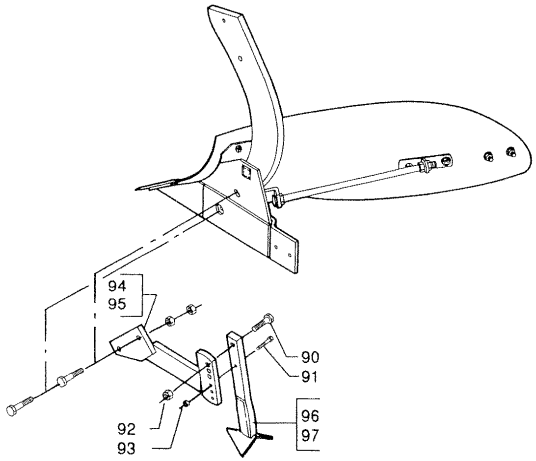

Fig.	Pack	Serial no.	Part no.	Pieces	Notes
1			90 260 026	1	Mouldboard tail piece, right
2			90 260 027	1	Mouldboard tail piece, left
3			00 331 043	2	Flat washer ø½"
4			00 323 250	2	Plough bolt w. 2 noses incl. nut, M12 x 45 mm
5			00 331 043	2	Flat washer ø½"
7			00 315 019	3	Steel nut M20
8			90 060 339	1	Mouldboard brace, T85/28
9			90 060 338	1	Mouldboard brace, T85/38
10			00 316 017	1	Counter nut M20
11			00 331 043	2	Flat washer ø½"
12			90 252 013	1	Brace bracket, right
13			90 252 014	1	Brace bracket, left
14			00 323 244	11	Plough bolt w. 2 noses incl. nut, M12 x 30 mm
15			90 060 319	1	Mouldboard incl. bolts, right
16			90 060 320	1	Mouldboard incl. bolts, left
17			00 316 047	1	Lock nut M16
18			90 063 163	1	Tail piece for landside, 210 mm
20			90 060 343	1	Brace bracket
21			90 060 344	1	Brace for share, T85/38
22			90 060 321	1	Mouldboard shin right incl. bolts, T85/28
23			90 060 322	1	Mouldboard shin left incl. bolts, T85/28
24			90 060 332	1	Mouldboard shin right incl. bolts, T85/38
25			90 060 333	1	Mouldboard shin left incl. bolts, T85/38
30			00 323 201	1	Special bolt M16 x 55 mm
31			00 323 226	2	Plough bolt incl. nut, M12 x 35 mm
32			90 062 122	1	Frog, right
33			90 062 123	1	Frog, left
34			00 323 225	3	Plough bolt incl. nut, M12 x 30 mm
35			90 060 184	1	Share upper part right, T85/28
36			90 060 188	1	Share upper part left, T85/28
37			90 060 336	1	Share upper part right, T85/38
38			90 060 337	1	Share upper part left, T85/38
40			90 062 103	1	Share lower part right, T85/28-14"
41			90 062 107	1	Share lower part left, T85/28-14"
42			90 062 106	1	Share lower part right, T85/28-16"
43			90 062 108	1	Share lower part left, T85/28-16"
44			90 062 120	1	Share lower part right, T85/38
45			90 062 121	1	Share lower part left, T85/38
46			00 323 233	1	Plough bolt conic incl. nut, M12 x 28 mm
50			90 060 349	1	Tail piece for landside, 465 & 600 mm
51			00 323 225	2	Plough bolt incl. nut, M12 x 30 mm
52			00 323 226	4	Plough bolt incl. nut, M12 x 35 mm
53			90 230 020	1	Landside, 320 mm
54			90 060 347	1	Landside, 465 mm
55			90 060 348	1	Landside, 600 mm
60			00 323 226	2	Plough bolt incl. nut, M12 x 35 mm
61			00 323 225	1	Plough bolt incl. nut, M12 x 30 mm
62			90 062 130	1	Front frog extension, right
63			90 062 131	1	Front frog extension, left
64			00 323 236	1	Plough bolt conic incl. nut, M12 x 40 mm
65			00 323 234	1	Plough bolt conic incl. nut,M12 x 32 mm
66			90 060 185	1	Reversible point, right
67			90 060 189	1	Reversible point, left
70			90 060 350	1	Share wing right, T85/28-14"
71			90 060 351	1	Share wing left, T85/28-14"
72			90 060 352	1	Share wing right, T85/28-16"
73			90 060 353	1	Share wing left, T85/28-16"
74			90 060 354	1	Share wing right, T85/38
75			90 060 355	1	Share wing left, T85/38
80			00 315 016	-	Steel nut M12
90			00 306 120	1	Steel bolt M16 x 55 mm
91			00 306 034	1	Steel bolt M10 x 50 mm
92			00 316 006	1	Lock nut M16
93			00 316 045	1	Lock nut M10
94			90 232 122	1	Right
95			90 232 121	1	Left
96			90 232 123	1	Right
97			90 232 120	1	Left

VPS & VPU

T 88/21

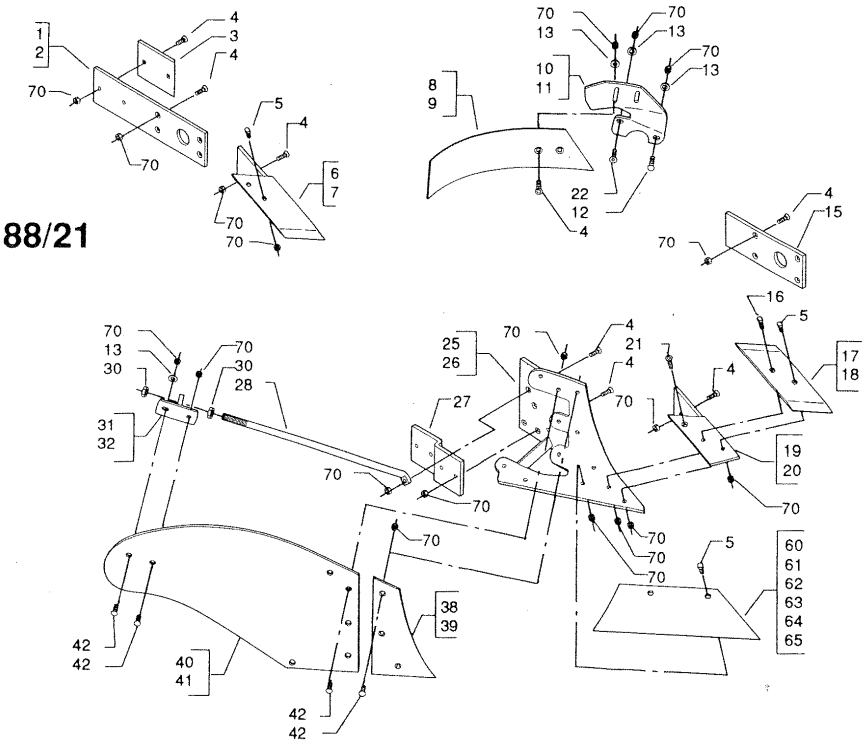

T 88 R

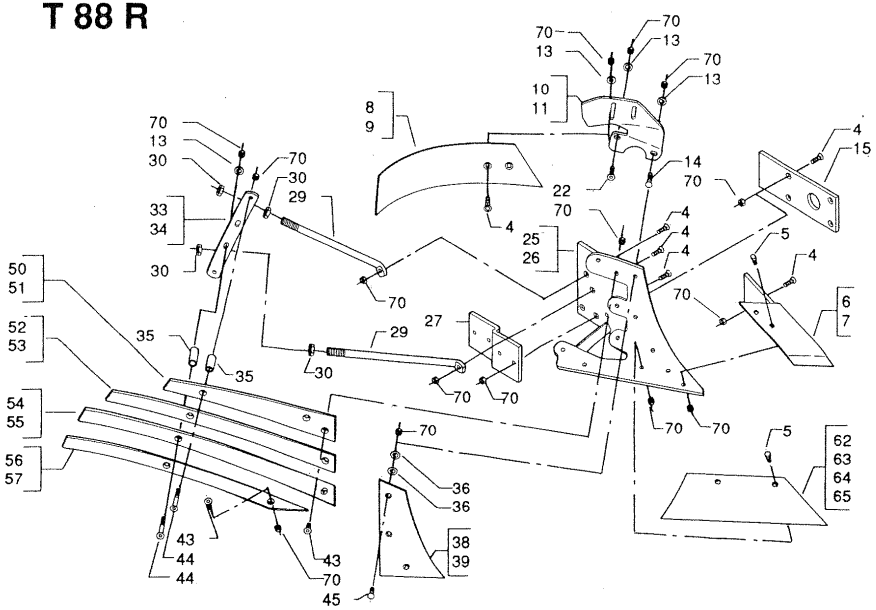

Fig.	Pack	Serial no.	Part no.	Pieces	Notes
1			90 060 347	1	Landside, 465 mm
2			90 060 348	1	Landside, 600 mm
3			90 060 349	1	Tail piece for landside
4			00 323 226		Plough bolt incl. nut, M12 x 35 mm
5			00 323 234		Plough bolt conic incl. nut, M12 x 32 mm
6			90 062 150	1	Front frog exyension, right
7			90 062 151	1	Front frog extension, left
8			90 060 203	1	Coverboard blade, right
9			90 060 204	1	Coverboard blade, left
10			90 260 028	1	Coverboard bracket, right
11			90 260 029	1	Coverboard bracket, left
12			00 323 249		Plough bolt w. 2 noses incl. nut, M12 x 40 mm
13			00 331 043		Flat washer ø½"
14			00 323 250		Plough bolt w. 2 noses incl. nut, M12 x 45 mm
15			90 230 020	1	Landside, 320 mm
16			00 323 236		Plough bolt conic incl. nut, M12 x 40 mm
17			90 060 185	1	Reversible point, right
18			90 060 189	1	Reversible point, left
19			90 242 022	1	Front frog extension, right
20			90 242 023	1	Front frog extension, left
21			00 323 225		Plough bolt incl. nut, M12 x 30 mm
22			00 323 281		Plough bolt w. 1 nose incl. nut, M12 x 45 mm
25			90 242 020	1	Frog, right
26			90 242 021	1	Frog, left
27			90 063 163	1	Tail piece for landside, 210 mm
28			90 250 033	1	Mouldboard brace
29			90 250 032	2	Mouldboard brace
30			00 315 033	2/4	Nut M20
31			90 252 022	1	Brace bracket, right
32			90 252 023	1	Brace bracket, left
33			90 252 020	1	Brace bracket, right
34			90 252 021	1	Brace bracket, left
35			90 280 100	2	Spacer
36			00 331 062	4	Nylon washer ø30/16 x 1.5 mm
38			90 210 079	1	Mouldboard shin, right
39			90 210 078	1	Mouldboard shin, left
40			90 210 080	1	Mouldboard, right
41			90 210 081	1	Mouldboard, left
42			00 323 182		Plough bolt w. 2 noses incl. nut, M12 x 30 mm
43			00 323 238		Plough bolt w. 1 nose incl. nut, M12 x 30 mm
44			00 323 284		Plough bolt w. 1 nose incl. nut, M12 x 80 mm
45			00 323 248		Plough w. 2 noses incl. nut, M12 x 35 mm
50			90 210 062	1	Right
51			90 210 066	1	Left
52			90 210 063	1	Right
53			90 210 067	1	Left
54			90 210 064	1	Right
55			90 210 068	1	Left
56			90 210 065	1	Right
57			90 210 069	1	Left
60			90 060 150	1	Share right, T88-12"
61			90 060 151	1	Share left, T88-12"
62			90 060 062	1	Share right, T88-14"
63			90 060 063	1	Share left, T88-14"
64			90 060 152	1	Share right, T88-16"
65			90 060 153	1	Share left, T88-16"
70			00 315 010		Nut M12

VPS

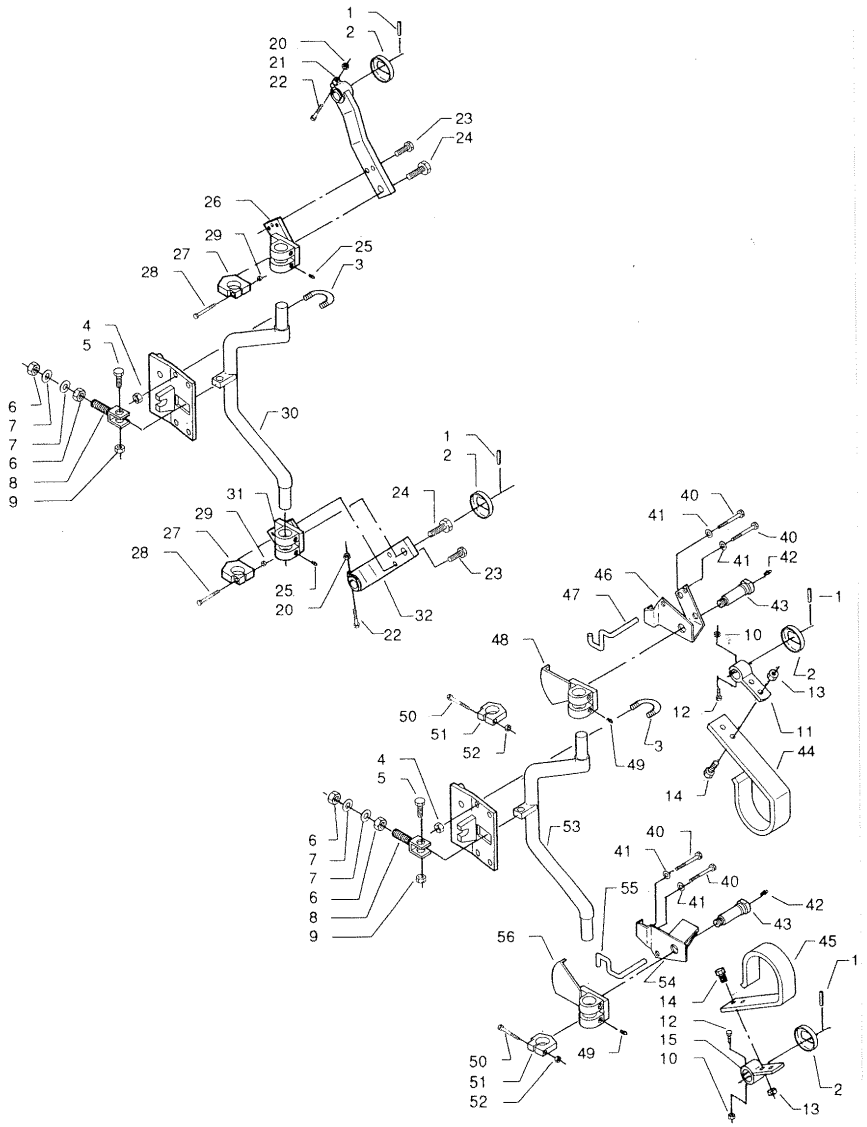

Fig.	Pack	Serial no.	Part no.	Pieces	Notes
1			00 333 049		Slotted spring pin ø8 x 40 mm
2			90 090 114		Seal cap
3			90 100 144		U-clamp
4			00 316 006		Lock nut M16
5			00 306 044		Steel bolt M12 x 40 mm
6			00 315 020		Steel nut M16
7			00 331 056		Flat washer M16
8			90 102 502		
9			00 316 046		Lock nut M12
10			00 316 045		Lock nut M10
11			90 898 078		Disc spring bracket, left
12			00 305 030		Steel bolt M10 x 45 mm
13			00 316 006		Lock nut M16
14			00 307 003		Steel bolt M16 x 45 mm
15			90 898 077		Disc spring bracket, right
20			00 316 045		Lock nut M16
21			90 102 520		Left
22			00 305 030		Steel bolt M10 x 45 mm
23			00 307 002		Steel bolt M16 x 35 mm
24			00 307 007		Steel bolt M20 x 50 mm
25			00 421 000		Grease nipple M6
26			90 102 518		Bearing for disc shank, left
27			90 090 111		Tension clamp
28			00 306 109		Steel bolt M14 x 80 mm
29			00 316 026		Lock nut M14
30			90 898 083		Shank for disc coulter
31			90 102 517		Bearing for disc shank, right
32			90 102 519		Right
40			00 305 072		Steel bolt M16 x 75 mm
41			00 323 207		Spring washer M16
42			00 421 000		Grease nipple M6
43			90 100 216		
44			90 898 102		Spring for disc coulter, left
45			90 898 101		Spring for disc coulter, right
46			90 898 080		Bracket for spring, left
47			90 410 012		Lock clamp, left
48			90 898 076		Bearing for disc shank, left
49			00 421 000		Grease nipple M6
50			00 306 109		Steel bolt M14 x 80 mm
51			90 090 111		Tension clamp
52			00 316 026		Lock nut M14
53			90 898 083		Shank for disc coulter
54			90 898 079		Bracket for spring, right
55			90 410 011		Lock clamp, right
56			90 898 075		Bearing for disc shank, right

VPS

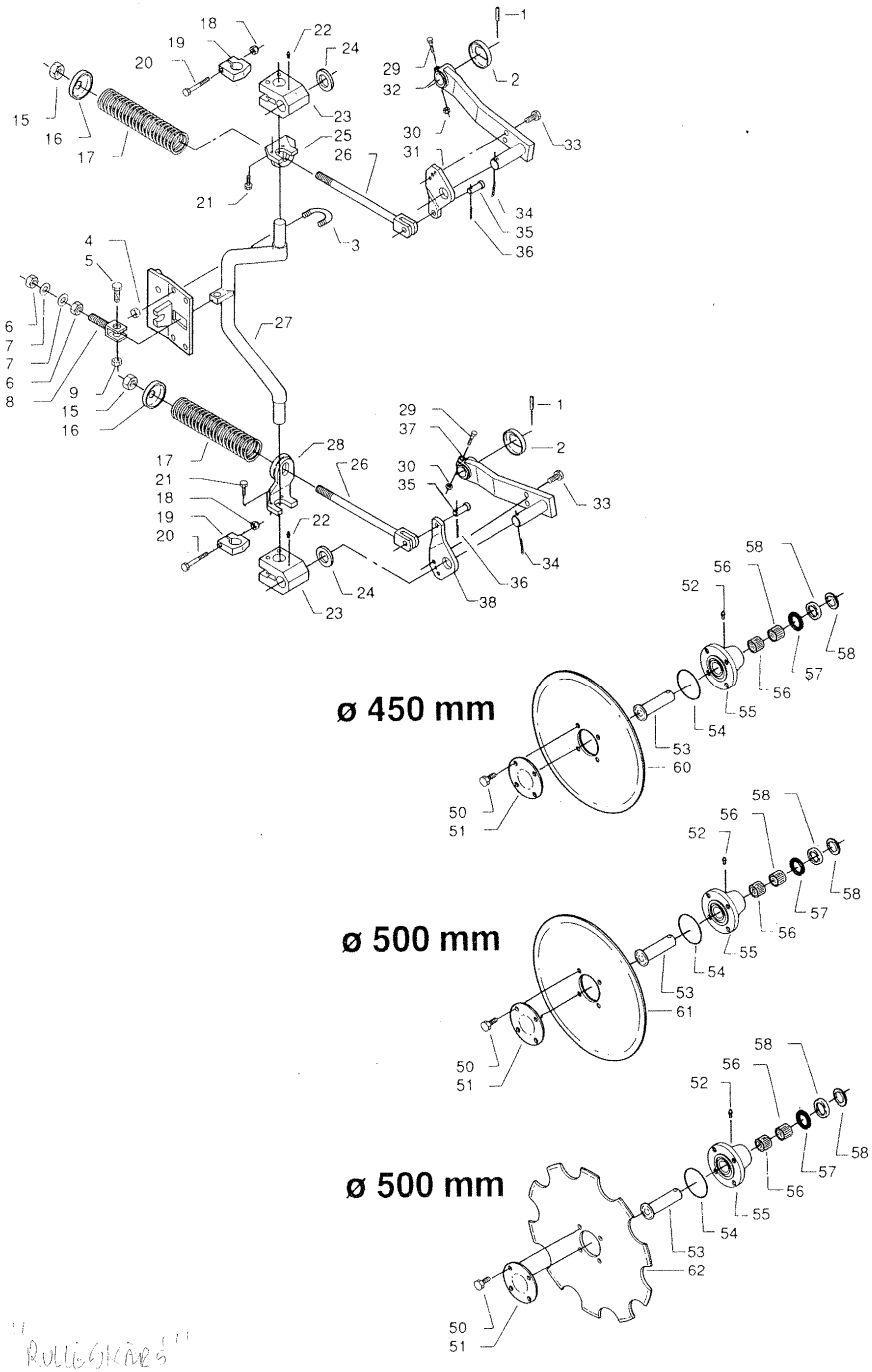

"RULLESKÆRES"
LEJE TIL NY 4000 - 5000 plov. 6206 lejer

Fig.	Pack	Serial no.	Part no.	Pieces	Notes
1			00 333 049		Slotted spring pin ø8 x 40 mm
2			90 090 114		Seal cap
3			90 100 144		U-clamp
4			00 316 006		Lock nut M16
5			00 306 044		Steel bolt M12 x 40 mm
6			00 315 020		Steel nut M16
7			00 331 056		Flat washer M16
8			90 102 502		
9			00 316 046		Lock nut M16
15			00 316 007		Lock nut M20
16			90 090 112		
17			00 323 167		Spring
18			00 316 026		Lock nut M14
19			90 090 111		Tension clamp
20			00 306 109		Steel bolt M14 x 80 mm
21			00 306 071		Steel bolt M12 x 35 mm
22			00 421 000		Grease nipple M6
23			90 100 282		
24			90 100 287		
25			90 102 079		Left
26			90 092 103		
27			90 898 083		Shank for disc coulter
28			90 102 078		Right
29			00 305 030		Steel bolt M10 x 45 mm
30			00 316 045		Lock nut M10
31			90 100 289		Left
32			90 102 077		Left
33			00 306 054		Steel bolt M16 x 35 mm
34			00 333 021		Slotted spring pin ø6 x 50 mm
35			90 090 110		
36			00 333 052		Slotted spring pin ø5 x 30 mm
37			90 102 076		Right
38			90 100 281		Right
50			00 306 029		Steel set screw M10 x 25 mm
51			90 090 117		Cap for hub
52			00 421 000		Grease nipple M6
53			90 092 104		Axle for hub
54			00 413 072		O-ring ø64.5 x 3 mm
55			90 480 051		Disc hub
56			00 402 003		Needle bearing # 30 26
57			00 413 071		ø52/30 x 7 mm
58			00 413 073		Seal cover Z205/30
Cpl			90 093 003		Hub complete, incl. items 50 - 58
60			90 550 460		Disc ø450 mm plain
61			90 550 500		Disc ø500 mm plain
62			90 550 452		

VPU

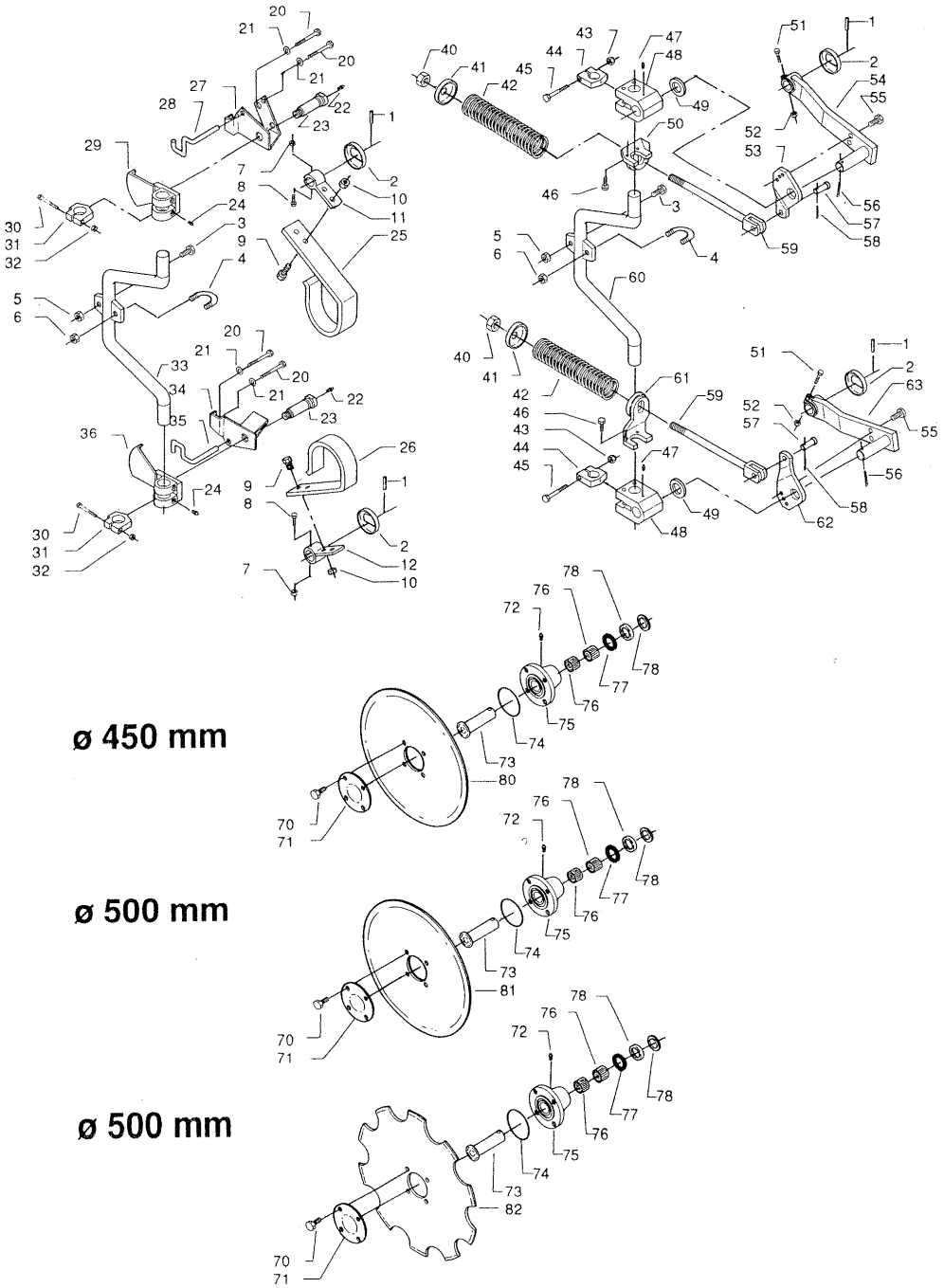

Fig.	Pack	Serial no.	Part no.	Pieces	Notes
1			00 333 049		Slotted spring pin ø8 x 40 mm
2			90 090 114		
3			00 308 009		Steel bolt M16 x 45 mm
4			90 100 144		
5			00 316 006		Lock nut M16
6			00 316 006		Lock nut M16
7			00 316 045		Lock nut M16
8			00 305 030		Steel bolt M10 x 45 mm
9			00 307 003		Steel bolt M16 x 45 mm
10			00 316 006		Lock nut M16
11			90 818 078		Left
12			90 818 077		Right
20			00 305 072		Steel bolt M16 x 75 mm
21			00 323 207		Spring washer M16
22			00 421 000		Grease nipple M6
23			90 100 216		
24			00 421 000		Grease nipple M6
25			90 898 102		Left
26			90 898 101		Right
27			90 898 080		Left
28			90 410 012		Left
29			90 898 076		Left
30			00 306 109		Steel bolt M14 x 80 mm
31			90 090 111		
32			00 316 026		Lock nut M14
33			90 898 072		
34			90 898 079		Right
35			90 410 011		Right
36			90 898 075		Right
40			00 316 007		Lock nut M20
41			90 090 112		
42			00 323 167		
43			00 316 026		Lock nut M14
44			90 090 111		
45			00 306 109		Steel bolt M14 x 80 mm
46			00 306 071		Stel bolt M12 x 35 mm
47			00 421 000		Grease nipple M6
48			90 100 282		
49			90 100 287		
50			90 102 079		Left
51			00 305 030		Steel bolt M10 x 45 mm
52			00 316 045		Lock nut M10
53			90 100 289		Left
54			90 102 077		Left
55			00 306 054		Steel bolt M16 x 35 mm
56			00 333 021		Slotted spring pin ø6 x 50 mm
57			90 090 110		
58			00 333 052		Slotted spring pin ø5 x 30 mm
59			90 092 103		
60			90 898 072		
61			90 102 078		Right
62			90 100 281		Right
63			90 102 076		Right
70			00 306 029		Steel set screw M10 x 25 mm
71			90 090 117		
72			00 421 000		Grease nipple M6
73			90 092 104		
74			00 413 072		O-ring ø64.5 x 3 mm
75			90 480 051		
76			00 402 003		Needle bearing # 30 26
77			00 413 071		ø52/30 x 7 mm
78			00 413 073		Seal cover Z 205/30
Cpl			90 093 003		Hub complete, incl. items 70 - 78
80			90 550 460		Disc ø450 mm plain
81			90 550 500		Disc ø500 mm plain
82			90 550 452		

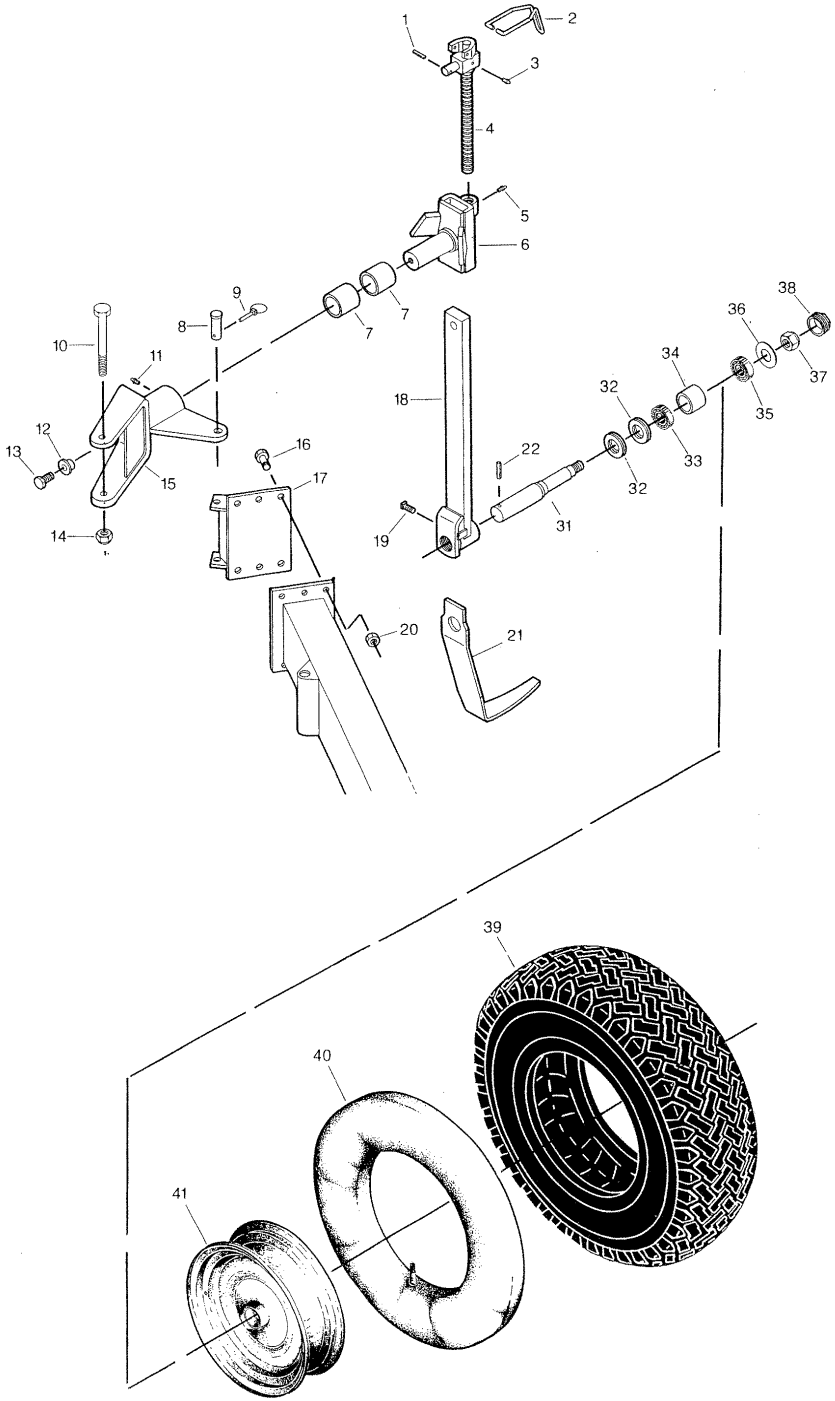

Fig.	Pack	Serial no.	Part no.	Pieces	Notes
1			00 333 008		Split pin ø8 x 40 mm
2			90 410 070		
3			00 421 000		Grease nipple M6
4			90 102 039		Spindle for wheel
5			00 421 000		Grease nipple M6
6			90 102 025		Bracket for wheel shank
7			00 323 164		Bushing
8			90 090 087		
9			00 333 068		Lynch pin ø4.5 mm
10			90 102 021		Special bolt
11			00 421 000		Grease nipple M6
12			90 100 141		Bushing for wheel
13			00 307 002		Steel set screw M16 x 35 mm
14			00 316 007		Lock nut M20
15			90 102 704		Console for wheel
16			00 306 056		Steel set screw M16 x 45 mm
17			90 102 703		Wheel attachment bracket
18			90 102 027		Shank for wheel
19			00 323 254		Stop screw M16 x 35 mm
20			00 316 047		Lock nut M16
21			90 100 170		Scraper for wheel
22			00 333 053		Slotted spring pin ø8 x 60 mm
31			90 070 308		Wheel axle ø40 x 135 mm
32			00 413 099		Seal cover Z 007
33			00 401 030		Ball bearing # 62 06
34			90 070 306		Spacer
35			00 401 028		Ball bearing # 63 05
36			90 070 307		Flat washer ø34/17 x 3 mm
37			00 316 006		Lock nut M16
38			90 070 118		Dust cap ø62 mm
39			90 440 012		Tyre 200 x 14.5 - 10 ply
40			90 440 011		Tube 200 x 14.5
41			90 440 010		Rim 675 x 14.5
Cpl			90 443 002		Rubber wheel complete, incl. items 30 - 41

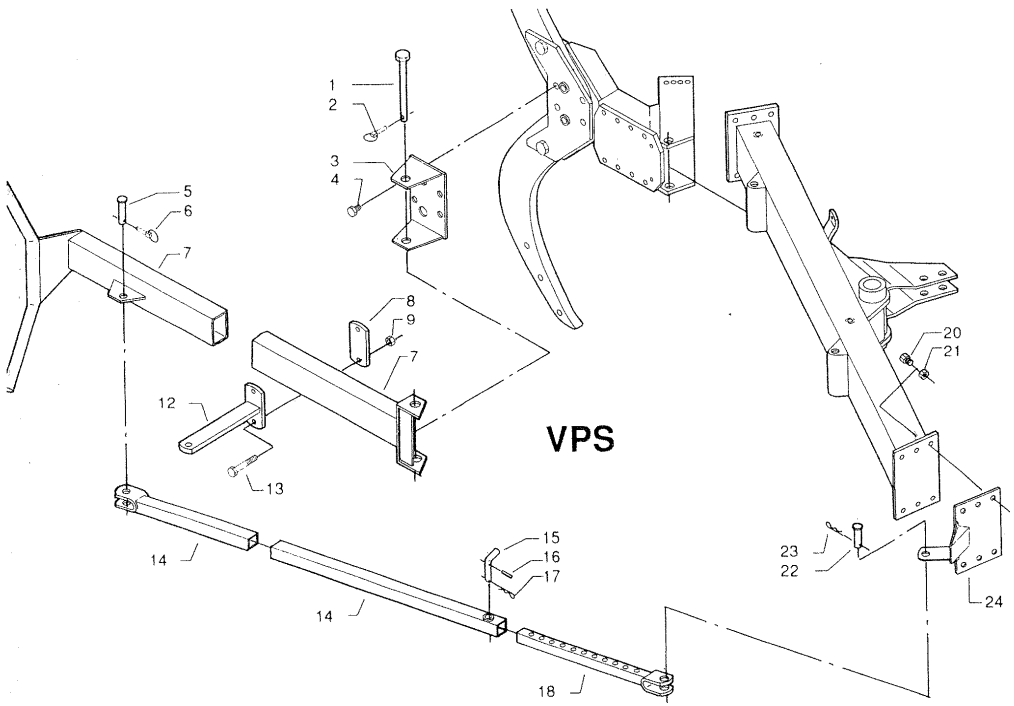

Fig.	Pack	Serial no.	Part no.	Pieces	Notes
1			90 012 077		Stay bolt
2			00 333 068		Lynch pin ø4.5 mm
3			90 102 510		Console for furrow press
4			00 306 058		Steel bolt M16 x 60 mm
5			90 090 087		Pin
6			00 333 068		Lynch pin ø4.5 mm
7			90 102 509		Arm for furrow press
8			90 100 540		
9			00 315 020		Steel nut M16
12			90 102 522		
13			00 306 062		Steel bolt M16 x 100 mm
14			90 102 512		Brace
15			90 010 244		Pin for arm
16			00 333 052		Slotted spring pin ø5 x 30 mm
17			00 333 011		Hair pin clip ø4 mm
18			90 102 041		Adjustment arm
20			00 308 008		Steel set screw M16 x 40 mm
21			00 316 047		Lock nut M16
22			90 090 087		Pin
23			00 333 011		Hair pin clip ø4 mm
24			90 102 511		Front console for arm

'PS & VPU

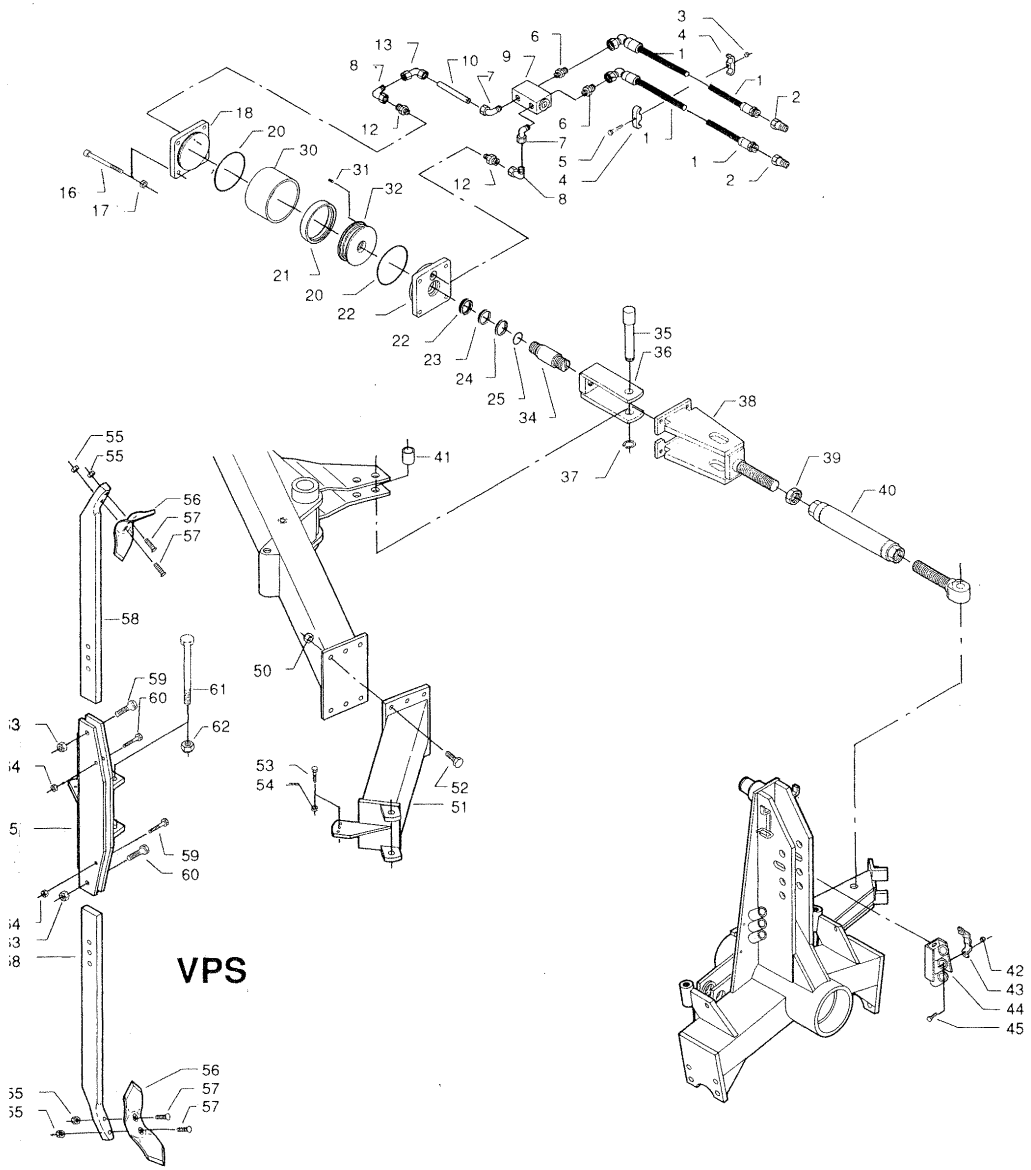

Fig.	Pack	Serial no.	Part no.	Pieces	Notes
1			90 460 106		3/8" x 2900 mm hose assy.
2			00 420 042		B 5602-8-10
Cpl			00 420 089		Complete, incl. items 3 - 5
6			00 420 082		
7			00 420 073		
8			00 420 074		
9			90 460 053		
10			90 100 202		ø12 x 115 mm
12			00 420 072		
13			00 420 092		
16			00 323 261		Hex-socket cap screw M12 x 150 mm
17			00 315 037		Steel nut M12
18			90 470 009		End cap
Cpl			90 470 010		Seal kit complete, incl. items 20 - 25
30			90 470 008		Cylinder tube
31			00 322 001		Stop screw M6 x 10 mm
32			90 470 007		Piston
33			90 470 006		End cap
34			90 470 005		Piston rod
Cpl			90 470 004		Cylinder complete ø125 x 40 mm, incl, items 16 - 34
35			90 100 200		
36			90 102 048		
37			00 407 014		Circlip ø25 x 1.2 mm
38			90 102 049		
39			90 100 138		Counter nut M33 x 2 mm
40			90 102 053		
41			90 100 203		
42			00 316 044		Lock nut M8
43			90 100 153		
44			90 102 050		
45			00 308 003		Steel set screw M8 x 30 mm
50			00 316 006		Lock nut M16
51			90 232 125		
52			00 306 056		Steel set screw M16 x 45 mm
53			00 306 030		Steel set screw M10 x 30 mm
54			00 316 045		Lock nut M10
55			00 315 010		Steel nut M12
56			05 000 506		
57			00 323 127		Share bolt M12 x 48 mm
58			90 230 134		
59			00 306 048		Steel bolt M12 x 60 mm
60			00 306 058		Steel bolt M16 x 60 mm
61			90 102 021		
62			00 315 033		Steel nut M20
63			00 316 006		Lock nut M16
64			00 316 046		Lock nut M12
65			90 232 124		