KONGSKILDE

FS SEEDER

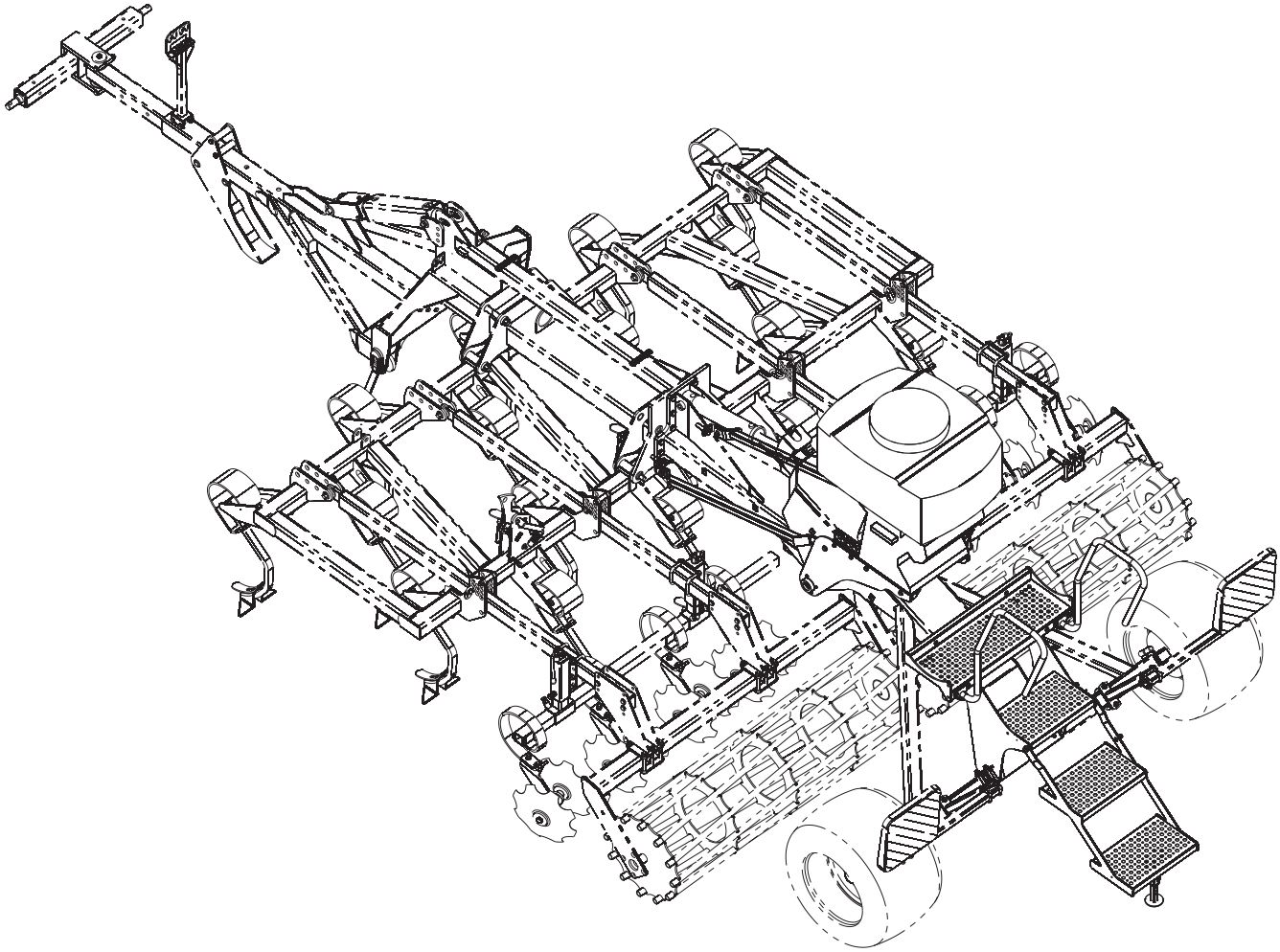

Ersatzteilliste
Spare parts list
Liste di pičce de rechange

Tab. 1

VF 7400 / DELTA FLEX
TRAILED VERSION

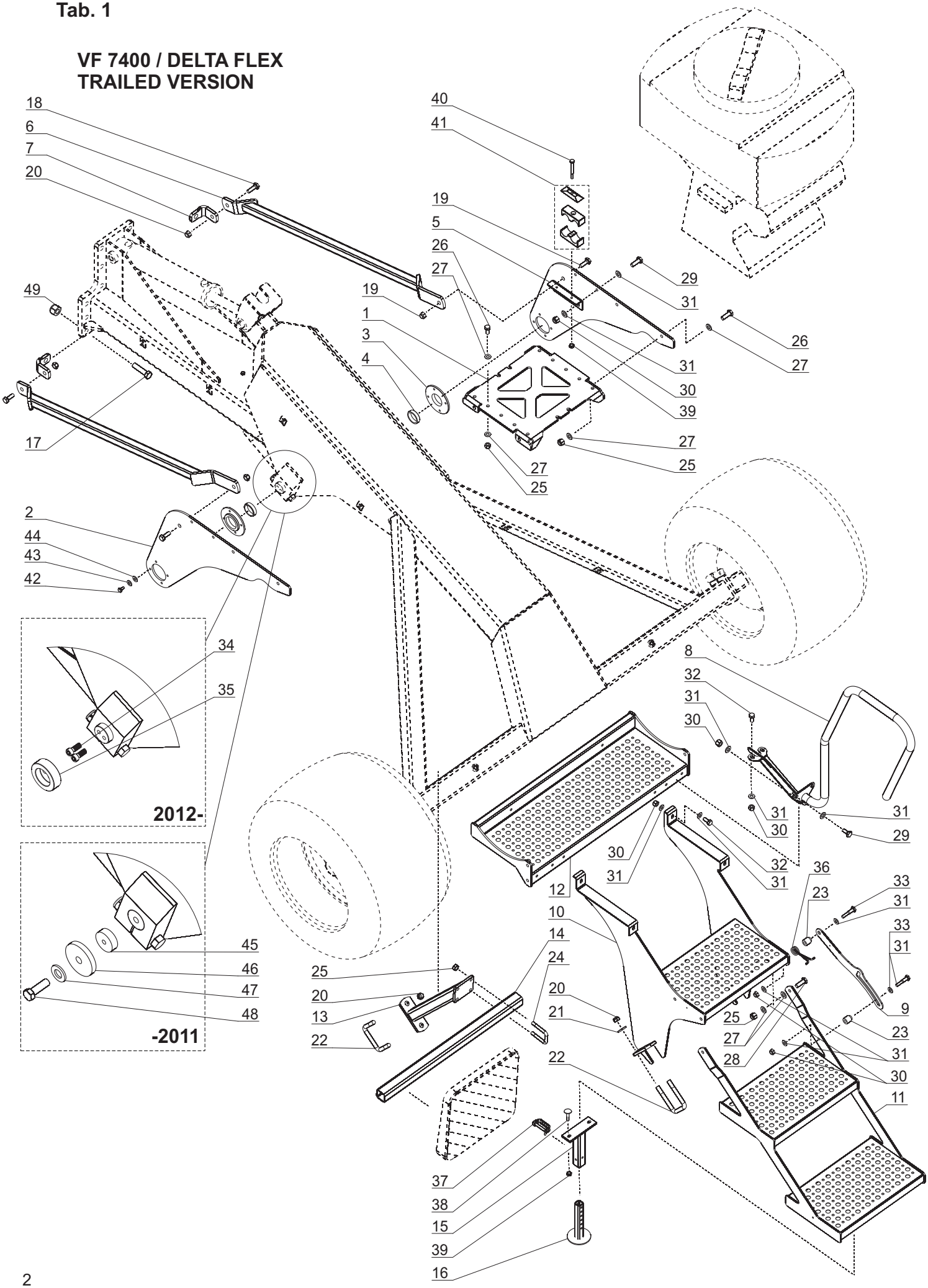

Tab. 1

Fig.	Serial no.	Part no.	Pieces	Notes		
1		372007098	1	Link		
2		372007099	2	Side plate		
3		372007103	2	Flange		
4		372007104	2	Bush		
5		372007100	2	Angle		
6		372348800	1	Beam		
7		372007108	1	Plate		
8		372349100	2	Handrail		
9		300006929	1	Blockade arm		
10		372349300	1	Platform		
11		372349400	1	Stairs		
12		300185200	1	Upper step		
13		372350300	2	Light holder		
14		372007125	2	Pipe		
15		7002153795	1	Outside supporting base		
16		7002153793	1	Supporting base		
17		300304119	2	Bolt	DIN931	M20x80 10,9
18		300304094	2	Bolt	DIN933	M16x50
19		300304093	2	Bolt	DIN933	M16x45
20		300316023	12	Self-locking nut	DIN985	M16
21		300332009	12	Washer	DIN126	M16
22		7002156620	4	U-bolt		M16 91x124
23		300006930	2	Bush		L=31
24		7002156661	4	U-bolt		M12 51x81
25		300316021	30	Self-locking nut	DIN985	M12
26		300304058	20	Bolt	DIN933	M12x40
27		300332008	52	Washer	DIN126	M12
28		300304057	2	Bolt	DIN933	M12x35
29		300304034	8	Bolt	DIN933	M10x30
30		300316020	16	Self-locking nut	DIN985	M10
31		300332027	24	Washer	DIN126	M10
32		300304032	8	Bolt	DIN933	M10x25
33		300304038	2	Bolt	DIN933	M10x50
34		71360412300	4	Bolt	DIN912	M12x30 10,9
35		372006344	2	Washer		
36		370006232	1	Spring		
37		7000036676	1	Safety split pin		40x40
38		300304191	2	Bolt	DIN603	M8x25
39		300316027	6	Self-locking nut	DIN985	M8
40		200216116	4	Bolt	DIN931	M8x80
41		372007116	4	Double pipe clamp		2x30
42		300304153	8	Bolt	DIN933	M8x20
43		300332025	8	Spring washer	DIN127B	M8
44		300332039	8	Washer	DIN126	M8
45		372007111	2	Bush		
46		7201011421	2	Washer		
47		71209019340	2	Fixation washer		16,4x32x2,8
48		71331116600	2	Bolt	DIN960	M16x1,5x60
49		300316016	2	Self-locking nut	DIN985	M20
50						

Tab. 2

VF 7400 / DELTA FLEX
TRAILED VERSION

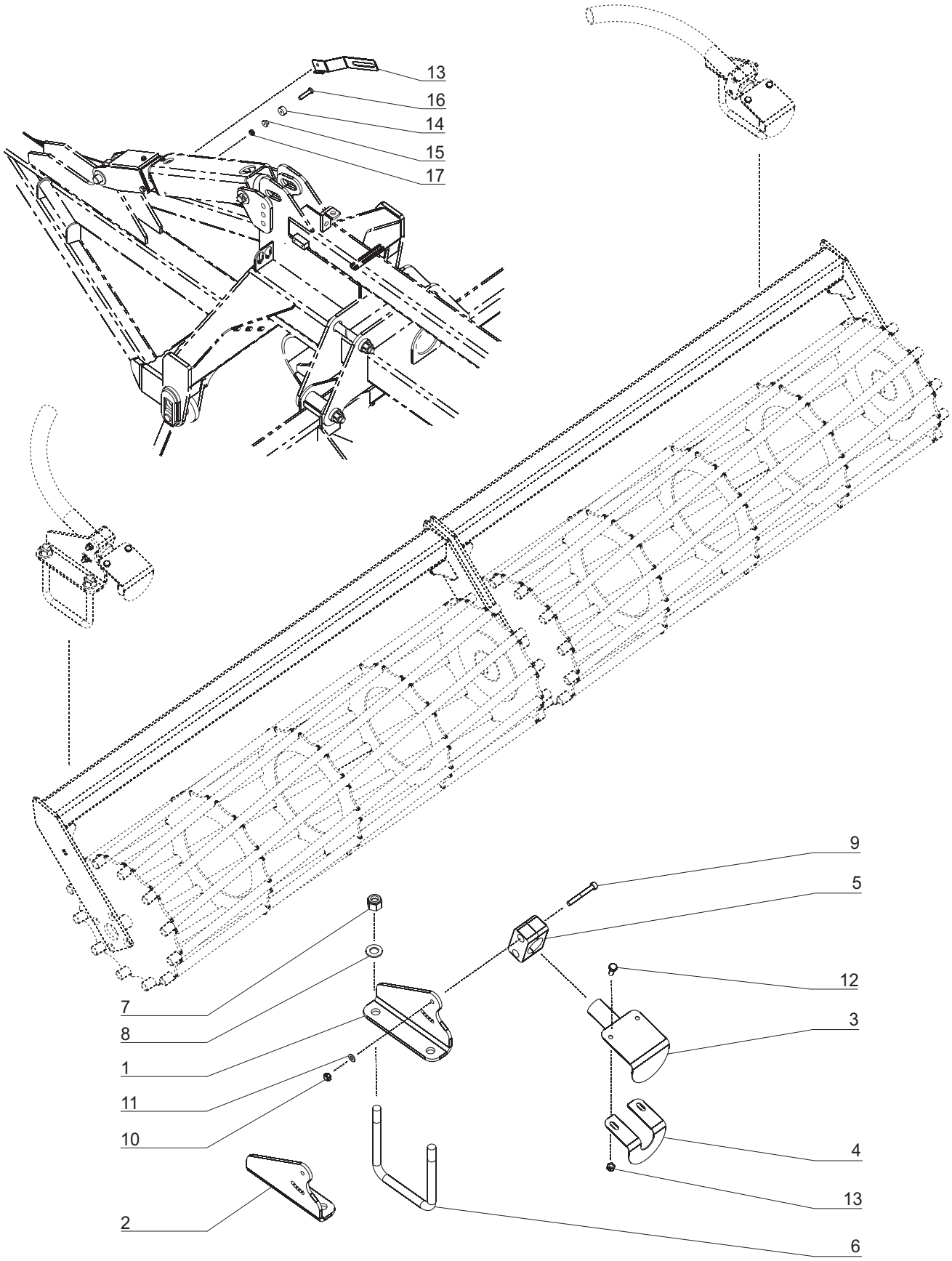

Tab. 2

Fig.	Serial no.	Part no.	Pieces	Notes		
1		372007101	4	Unit holder LH		
2		372007102	4	Unit holder rh		
3		372348600	8	Spreader plate - outside		
4		372007096	8	Spreader plate - inside		
5		372007115	8	Pipe clamp		
6		7203307007	8	U-bolt		
7		300316021	16	Self-locking nut	DIN985	M12
8		300332008	16	Washer	DIN126	M12
9		71303206505	16	Bolt	DIN912	M6x50
10		300316026	32	Self-locking nut	DIN981	M6
11		300332052	16	Washer	DIN9021	M6
12		300304032	2	Bolt	DIN933	M6x16
13		372007109	1	Sensor holder		
14		7000600257	1	Ferrit magnet		
15		372007110	1	Bush		
16		7000601073	16	Screw	DIN963	M4x25
17		200215261	32	Self-locking nut	DIN980V	M4

Tab. 3

VF 7400 / DELTA FLEX
LIFTED VERSION

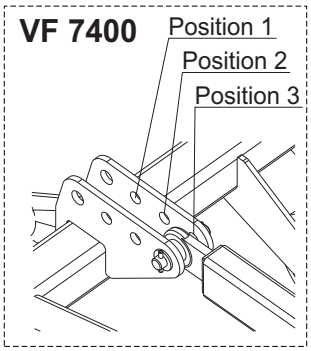

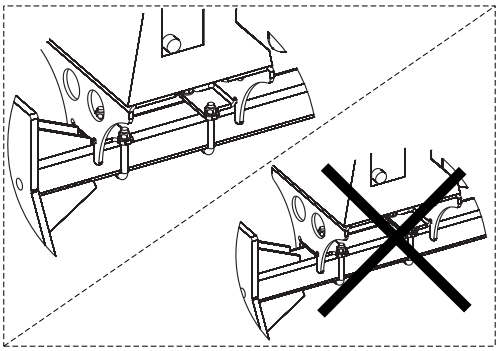

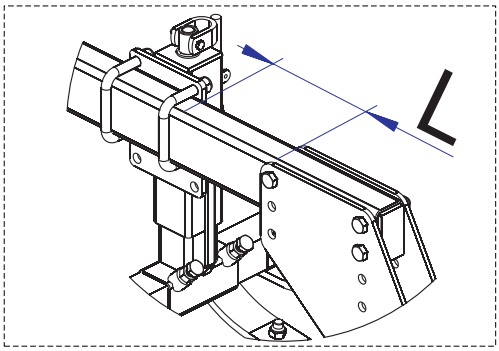

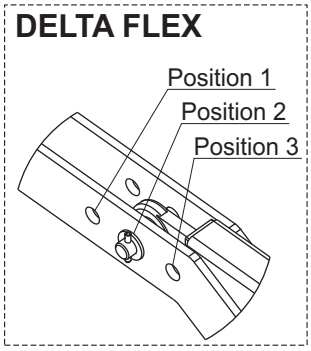

Nr of position	L min	L max
Position 1	0 mm	30 mm
Position 2	0 mm	105 mm
Position 3	60 mm	180 mm

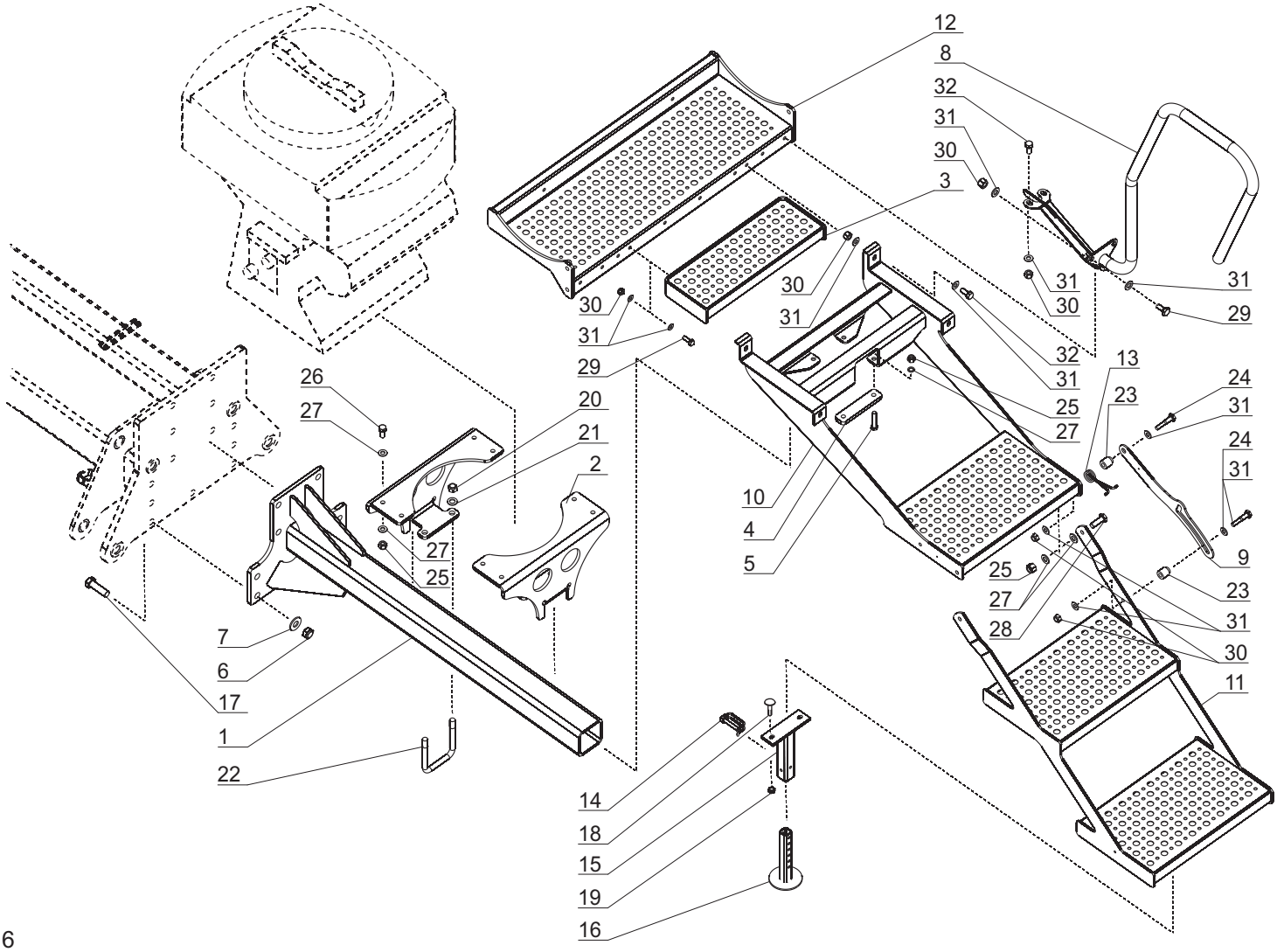

Tab. 3

Fig.	Serial no.	Part no.	Pieces	Notes		
1		372355300	1	Seeder holder cpl.		
2		372007163	2	Sedder bracker		
3		372355500	1	Step cpl.		
4		372007166	2	Plate		
5		300304062	4	Bolt	DIN933	M12x60
6		300316016	9	Self-locking nut	DIN985	M20
7		300332034	9	Washer	DIN126	M8
8		372349100	2	Handrail		
9		300006929	1	Blockade arm		
10		372355400	1	Platform		
11		372349400	1	Stairs		
12		300185200	1	Upper step		
13		370006232	1	Spring		
14		7000036676	1	Safety split pin		
15		7002153795	1	Outside supporting base		
16		7002153793	1	Supporting base		
17		300304062	2	Bolt	DIN931	M20x60
18		300304191	2	Bolt	DIN603	M8x25
19		300316027	2	Self-locking nut	DIN985	M8
20		300316023	4	Self-locking nut	DIN985	M16
21		300332009	4	Washer	DIN126	M16
22		7202301005	2	U-bolt		M16 101x135
23		300006930	2	Bush		L=31
24		300304038	2	Bolt	DIN933	M10x50
25		300316021	30	Self-locking nut	DIN985	M12
26		300304058	8	Bolt	DIN933	M12x40
27		300332008	40	Washer	DIN126	M12
28		300304057	2	Bolt	DIN933	M12x35
29		300304034	8	Bolt	DIN933	M10x30
30		300316020	18	Self-locking nut	DIN985	M10
31		300332027	28	Washer	DIN126	M10
32		300304032	8	Bolt	DIN933	M10x25

Tab. 4

VF 7400 / DELTA FLEX
LIFTED VERSION

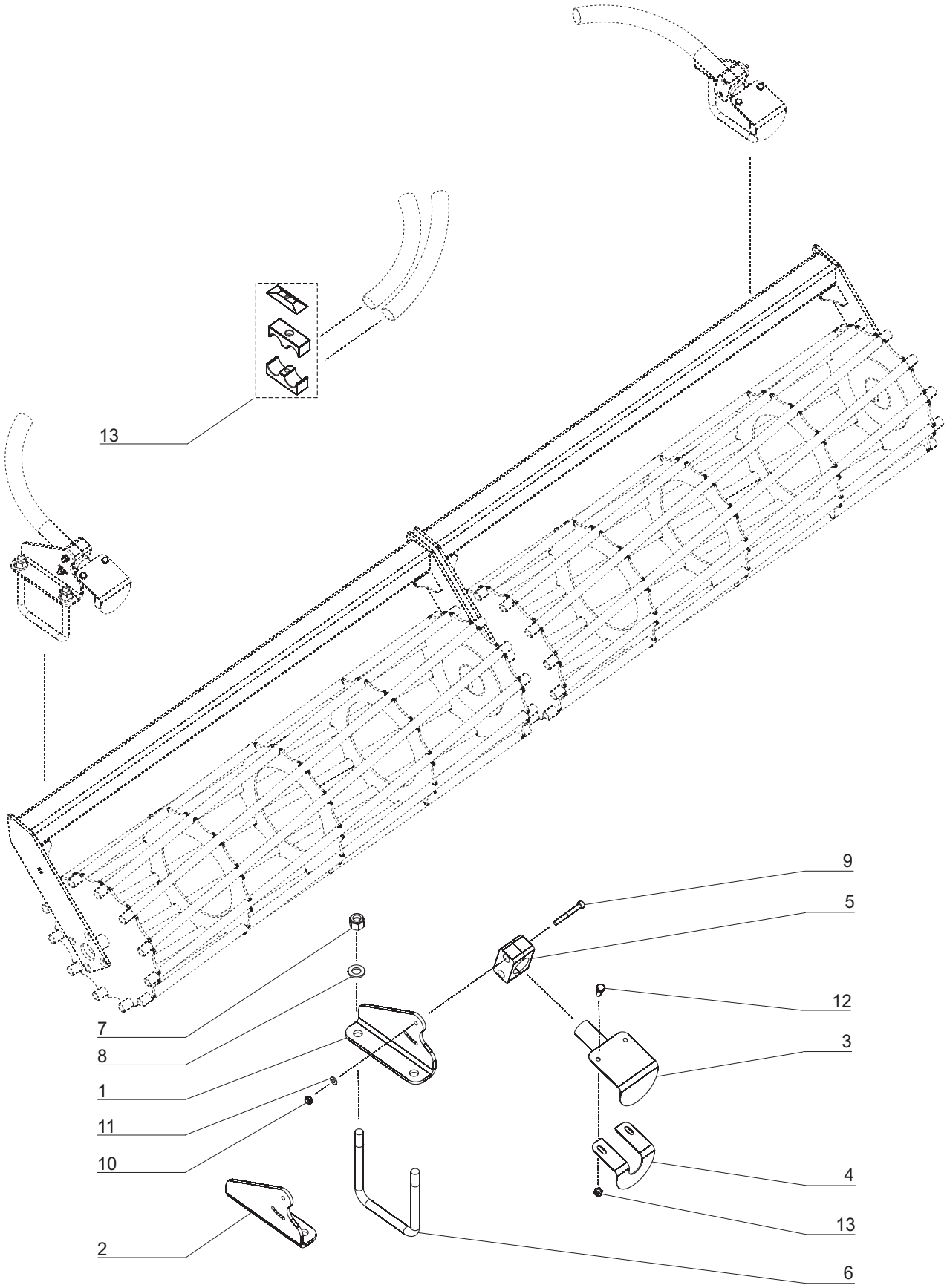

Tab. 9

Fig.	Serial no.	Part no.	Pieces	Notes		
1		372007101	4	Unit holder LH		
2		372007102	4	Unit holder rh		
3		372348600	8	Spreader plate - outside		
4		372007096	8	Spreader plate - inside		
5		372007115	8	Pipe clamp		
6		7203307007	8	U-bolt		
7		300316021	16	Self-locking nut	DIN985	M12
8		300332008	16	Washer	DIN126	M12
9		71303206505	16	Bolt	DIN912	M6x50
10		300316026	32	Self-locking nut	DIN981	M6
11		300332052	16	Washer	DIN9021	M6
12		300304032	2	Bolt	DIN933	M6x16
13		372007116	4	Double pipe clamp		2x30