KONGSKILDE 9200 DF

Vertical Tillage - Assembly/Parts

Kongskilde 9200

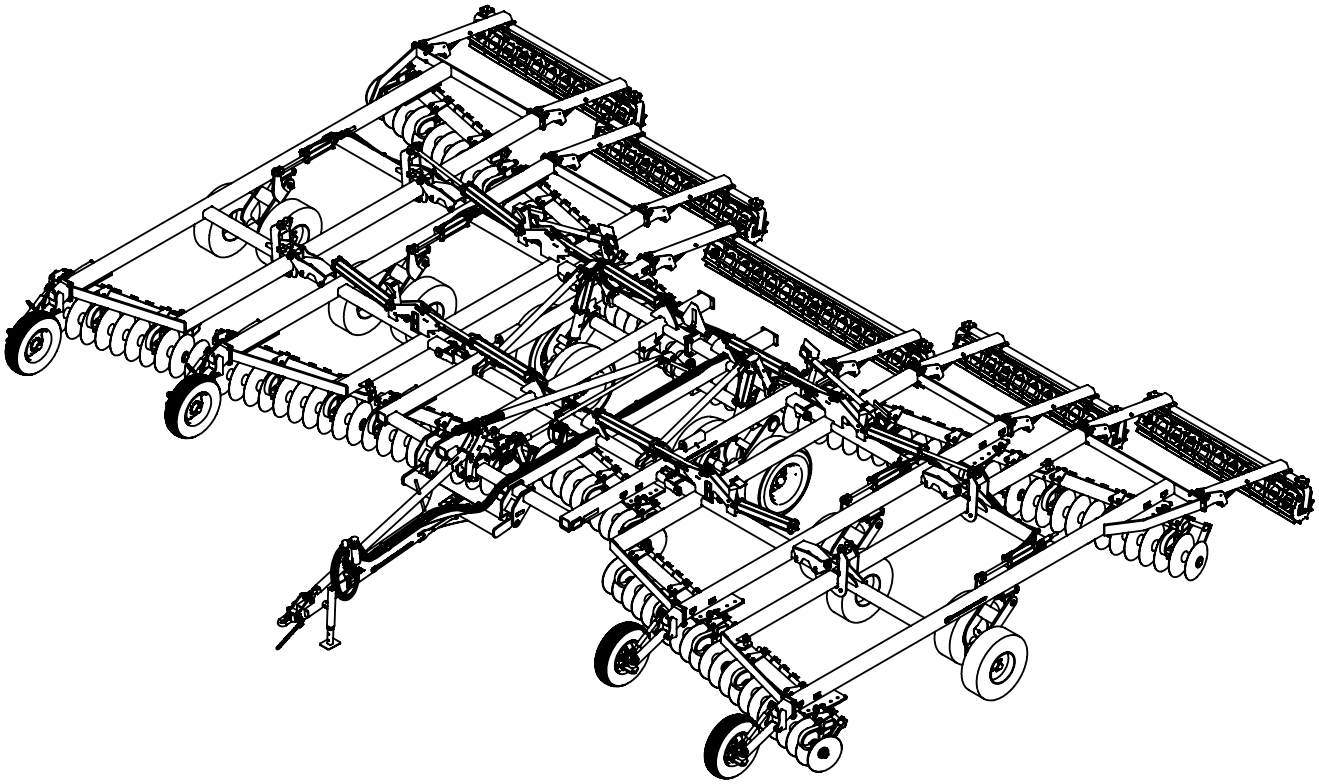

*Model may not be exactly as shown.

Kongskilde reserves the right to make changes to product designs and specifications without notice or obligation to rework.
See your local Kongskilde representative for current product specifications and options.

Models

769243901 9243 Vertical Tillage (43')

760000256 - Revision 0
Serial No. 500011 - current

Table of Contents

Introduction: 3
Mainframe & Gang Tube Assembly 4
Center Rockshaft Assembly 6
Center Rockshaft Part Details 8
Center Lift Cylinders & Linkage Assembly 10
Single Point Assembly 12
Hitch & Turnbuckle Assembly 14
Light Stands & Safety Lock Assembly 16
Center Gang & Scraper Assembly 18
Gang Assembly Details 20
Inner Wing & Gang Tube Assembly 22
Inner Wing Fold Cylinder Assembly 24
Inner Wing Wheelarm & Cylinder Assembly 26
Wing Wheelarm Part Details 28
Inner Wing Gang & Scraper Assembly 30
Outer Wing & Gang Tube Assembly 32
Outer Wing Fold Cylinder Assembly 34
Outer Wing Wheelarm & Cylinder Assembly 36
Outer Wing Gang & Scraper Assembly 38
Harrow Arm & Roller Assembly 40
Hydraulic Tree Assembly 42
Lift Hydraulics 44
Fold Hydraulics 46
Cylinder Parts 48
Light Kit Assemby 50
Swivel Gauge Wheel Assembly (Optional) 52
Decal Placement 54
Assembly Completion 56
Appendix A - Hose Routing 57
Appendix B - Light Wire Routing 59
Appendix C - Gang Layout 60
Appendix D - Roller Layout 61
Appendix E - Torque Chart 62

Introduction:

Please take the time to carefully read all the instruction booklets provided with your new Kongskilde product. Once you are finished reading do not throw these guides out. Keep them for later review.

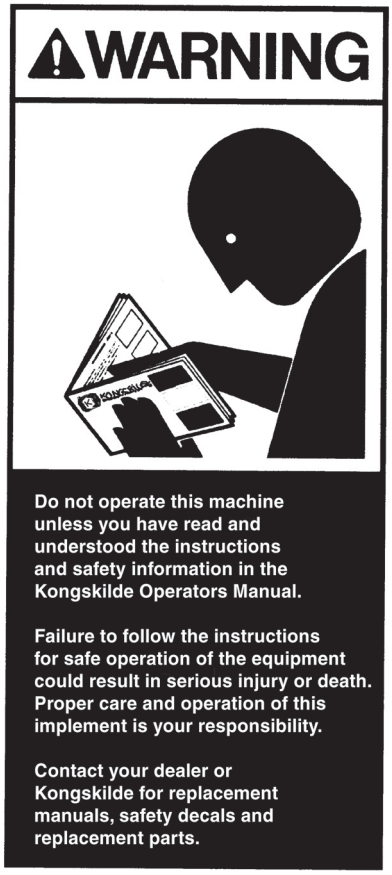

These instruction booklets have been developed to assist you in assembling, adjusting and maintaining your new Kongskilde Product. To obtain optimal performance over the lifetime of the product read and follow these instructions carefully.

When the assembly of the unit is completed, please refer to the Owners Manual before attempting to adjust or use the product. The Owners Manual will provide you with further instructions on the proper Field Settings, Adjustments and Maintenance Procedures for Safe Operation of the unit.

If optional equipment or attachments have been ordered for your unit, please refer to the instruction booklets provided for proper installation and adjustment of these accessories.

Please take the time to fill out and return the Owners Registration and Warranty Form provided with the Owners Manual in order to activate the warranty coverage.

NOTES:
-Images in this manual are for reference only and may not exactly match actual components.
-This manual depicts "Left" and "Right" as if standing behind the unit facing forward.
-Refer to torque chart in Appendix E for proper tightening of bolts, unless otherwise noted.

Mainframe & Gang Tube Assembly

Instructions:
-Hardware included in bag 760013035
-Connect center frames and gang tubes as shown, using parts listed on next page.
-Place center frames on steel shop stands during assembly until lift hydraulics are installed and working.

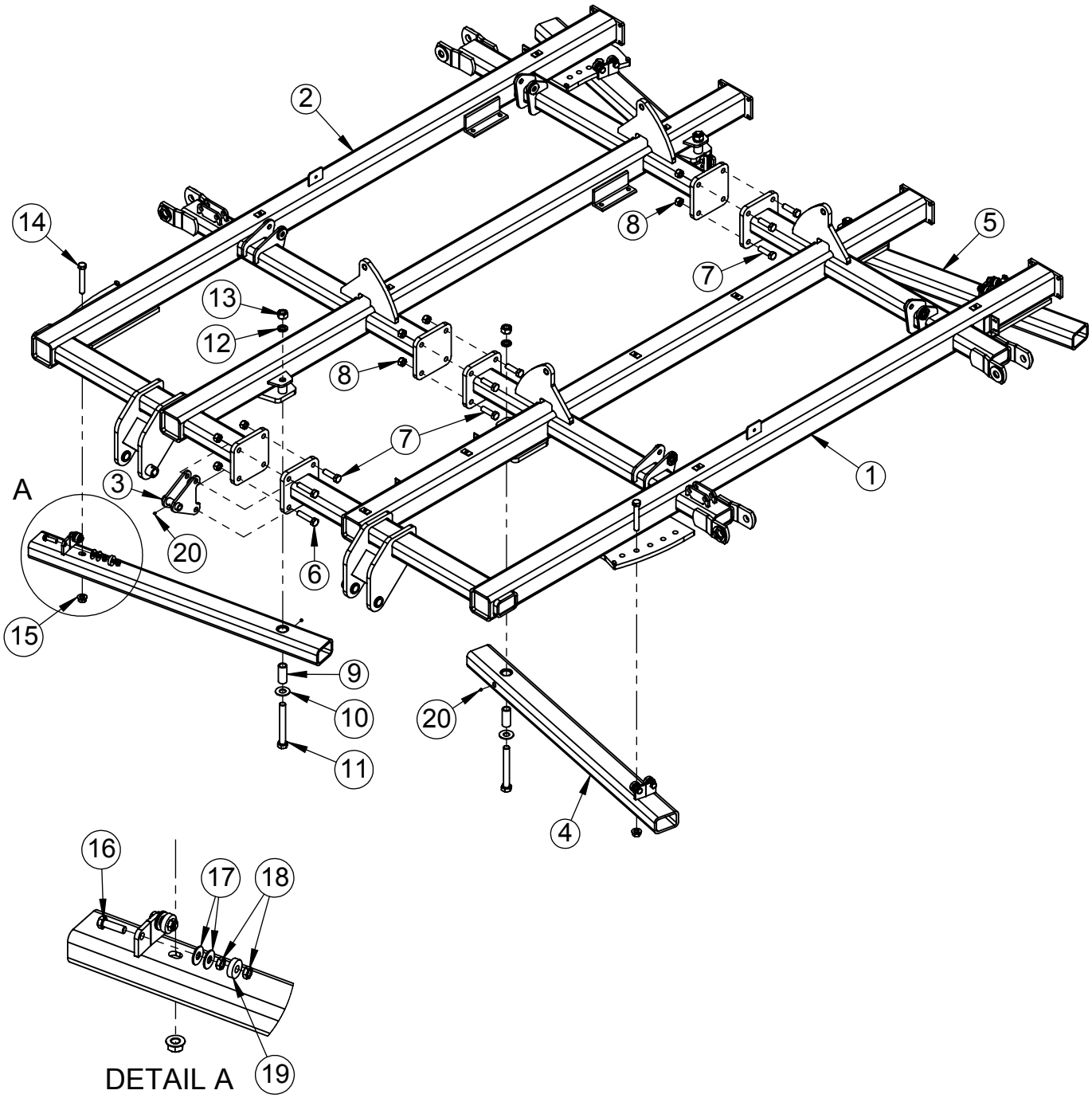

Fig.	Part no.	Qty	Description
1	760013054	1	Center Mainframe Assembly, LH
2	760013055	1	Center Mainframe Assembly, RH
3	760013060	1	Leveling Pivot Linkage Mount Assembly
4	760013061	2	Gang Tube Assembly, Front Center
5	760013062	2	Gang Tube Assembly, Rear Center
6	600356102	2	Hex Bolt, 1" x 4-1/2" GR. 5
7	600356004	10	Hex Bolt, 1" x 3-1/2" GR. 5
8	600366032	12	Nut, Toplock 1"
9	760015081	4	Bushing, Gang Pivot
10	7600381056	4	Flat Washer, 1-1/4" Hardened GR. 9
11	7600355104	4	Hex Bolt, 1-1/4" x 10" GR. 8
12	7600382104	4	Lock Washer, 1-1/4"
13	600365064	4	Nut, Standard 1-1/4" GR. 8
14	600355054	4	Hex Bolt, 1" x 6-1/2" GR. 8
15	7600366052	4	Flange Nut, Spiralock 1"
16	600356011	4	Hex Bolt, 3/4" x 2-1/2" GR. 5 (Full Thread)
17	600381009	8	Flat Washer, 3/4"
18	7600365080	8	Jam Nut, 3/4"
19	100401006	4	Bearing, Gang Adjust
20	600471000	5	Grease Fitting (pre-installed)

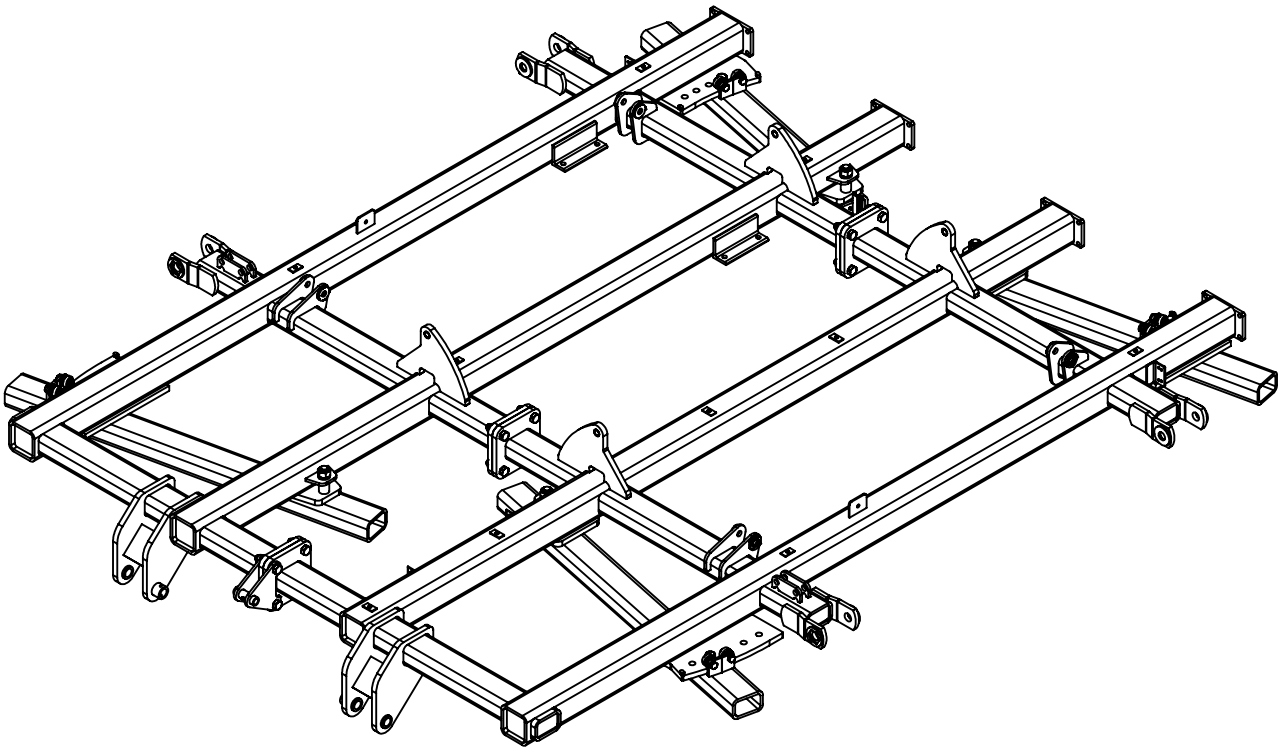

Center Rockshaft Assembly

Instructions:
-Hardware included in bag 760013038
-Insert wear sleeves into rockshaft blocks before assembling rockshaft.
-Assemble rockshaft, spindles and wheels to center frame as shown, using parts listed on next page.
-IMPORTANT: Install wheels to the spindles so the wheel rims are offset toward the wheel arms (Narrow setting). Torque lug nuts to 310 ft-lbs. Re-torque lug nuts after 10 hours of field use and check every 50 hours.

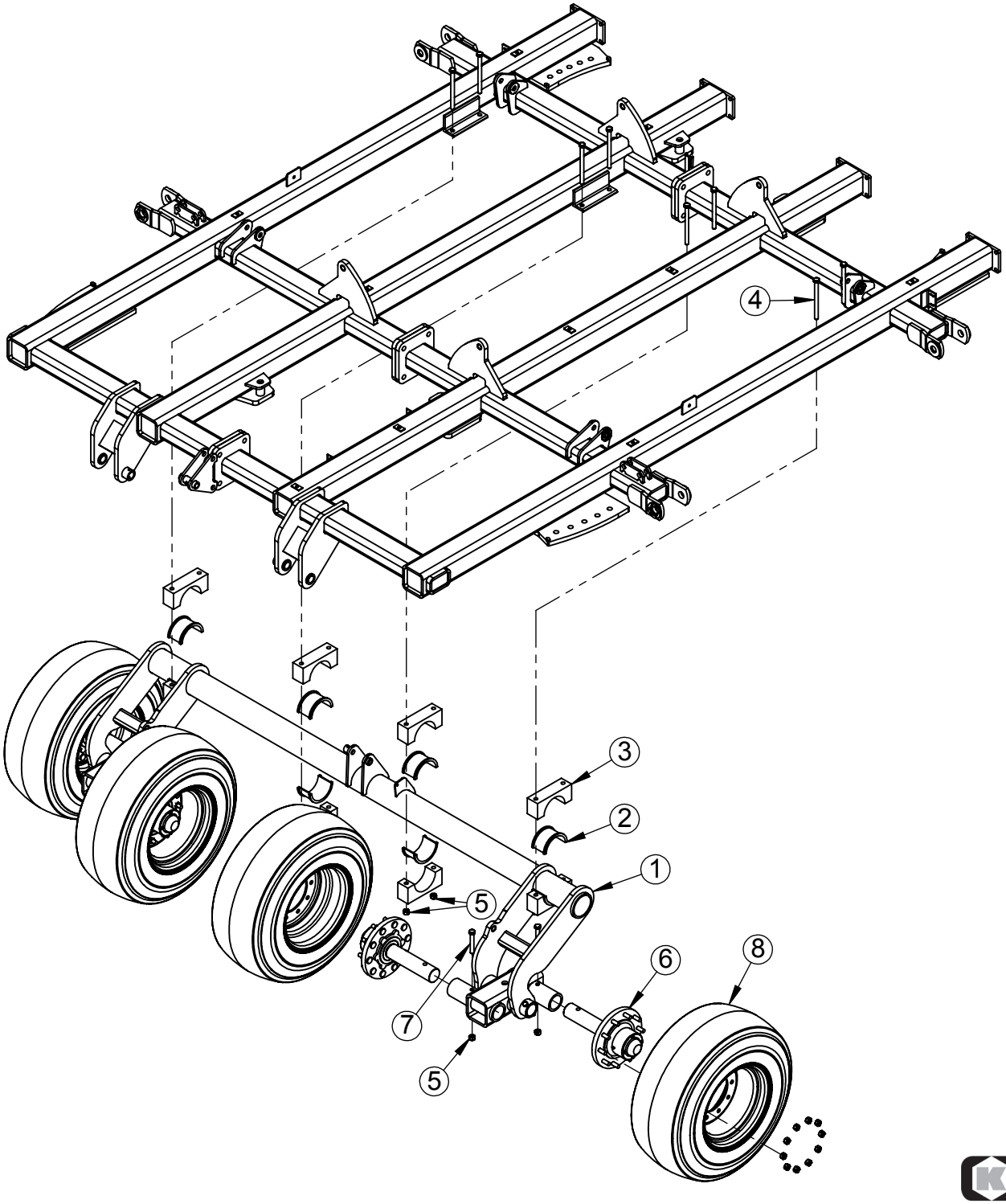

Fig.	Part no.	Qty	Description
1	760013025	1	Center Rockshaft Assembly
2	760031190	8	Center Rockshaft Sleeve
3	760031189	8	Center Rockshaft Block
4	7600355102	8	Hex Bolt, 3/4" X 9-1/2" GR. 8
5	600366024	12	Nut, Toplock 3/4"
6	7600473123	4	871 Hub & Spindle Assembly
7	600355047	4	Hex Bolt, 3/4" X 5" GR. 8
8	7600473134	4	Wheel Assembly, 440/55R18, 10-Bolt
8A	7600473132	-	Rim, 10-Bolt 18" X 14"
8B	7600473133	-	Tire, 440/55R18 - Goodyear FS24

See following page for part details

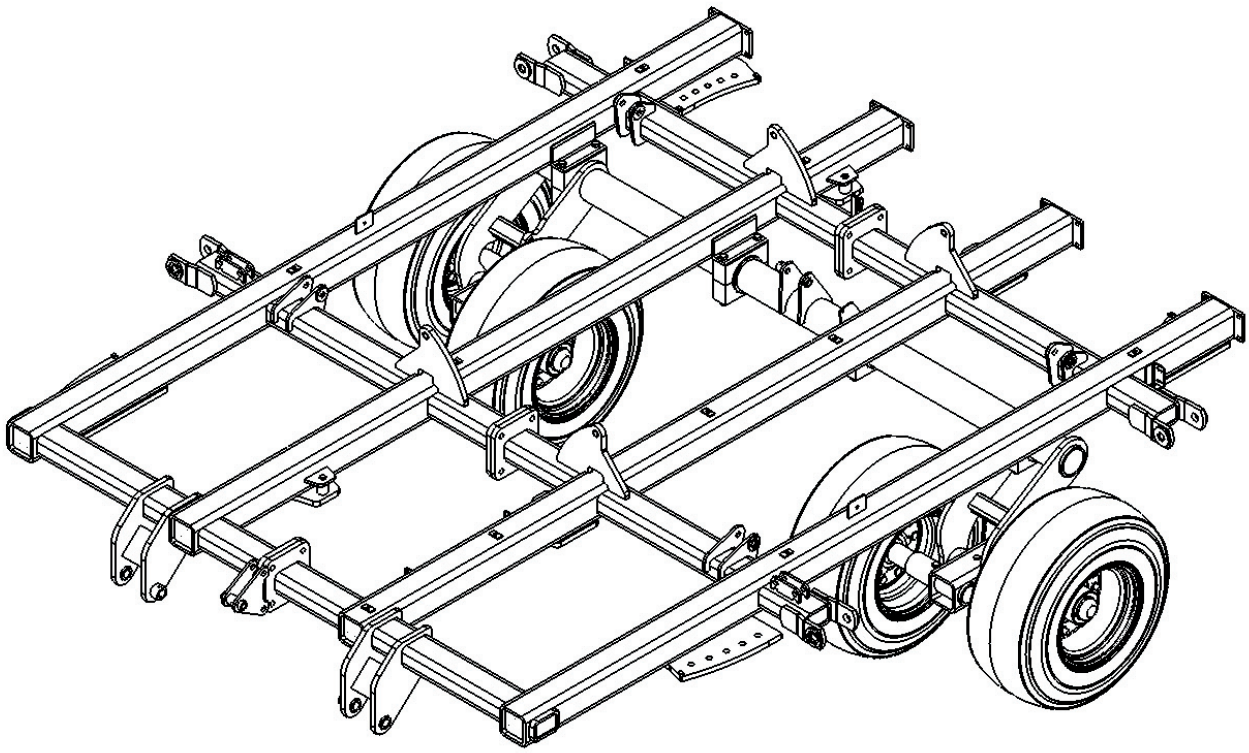

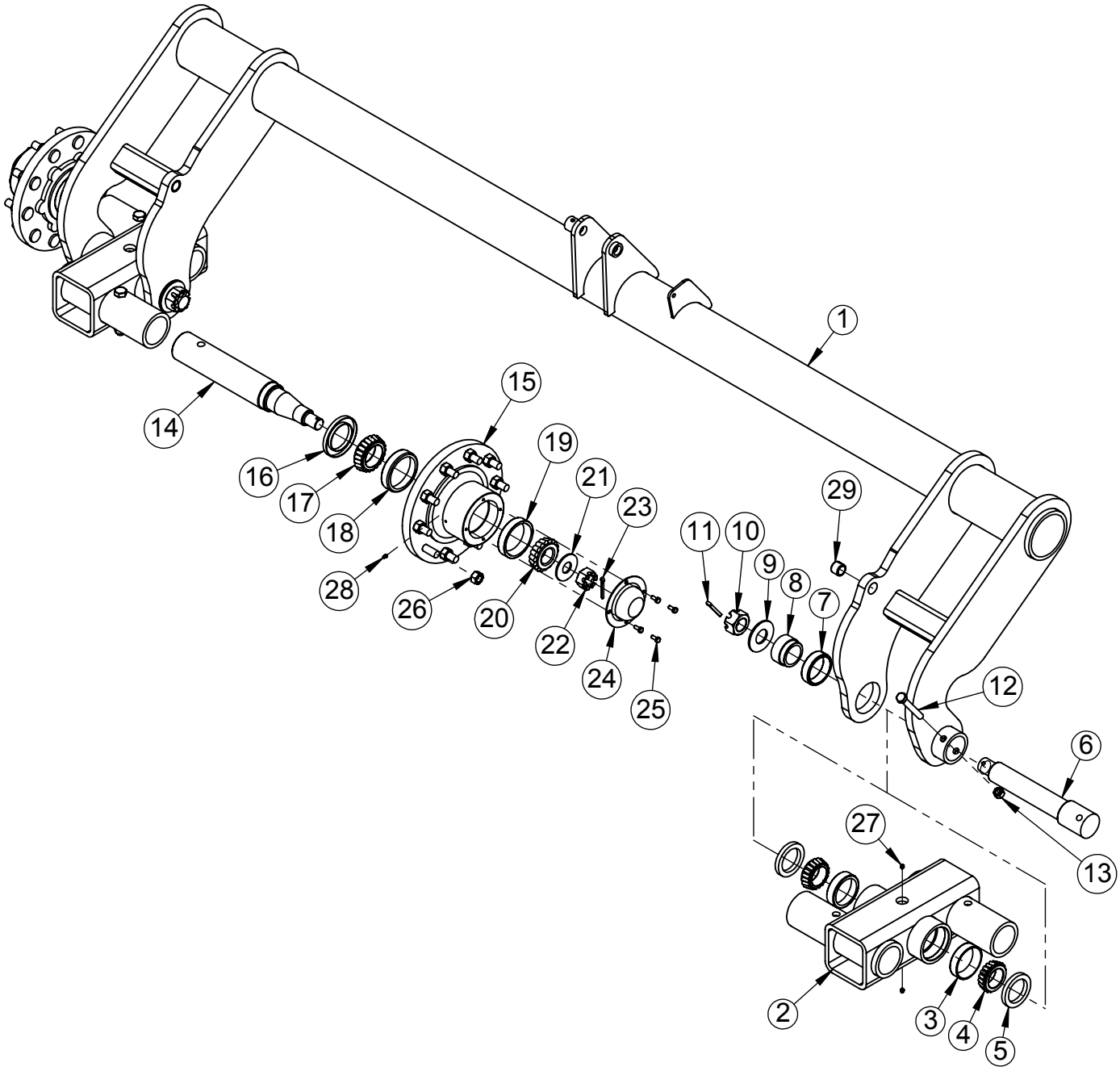
1
2
3
4
5
6
7
8
9
10
11
12
13
14
15
16
17
18
19
20
21
22
23
24
25
26
27
28
29

Fig.	Part no.	Qty	Description
1	760016051	1	Center Rockshaft Wdmt (with cylinder bushings)
2	760016052	2	Center Tandem Wdmt (with grease fittings)
3	7600473127	4	Cup, Bearing - JM207010A
4	7600473126	4	Cone, Bearing - JM207049
5	600473057	4	Seal, 2-3/4" w/Spring & Alternate Lip
6	760015130	2	Pin, Center Tandem Pivot
7	7600383221	2	Bushing, Connex 3"
8	760015131	2	Spacer, Center Tandem
9	600381016	2	Flat Washer, 1-1/2"
10	7600366051	2	Slotted Nut, 1-1/2" - 12 UNF, Plated
11	600383005	2	Pin, Cotter 5/16" X 2-1/2"
12	600356014	2	Hex Bolt, 5/8" X 4-1/2" GR. 5
13	600366031	2	Nut, Toplock 5/8"
-	7600473124	4	Spindle Assembly (Includes items 14, 21, 22, 23)
14	7600473125	4	Spindle, 3-1/8" x 20" (Plated)
-	763011621	4	Hub Assembly (Includes items 15, 16, 17, 20, 24, 25)
15	763011741	4	Hub - 871 (Includes items 18, 19, 26, 28)
16	76301156	4	Seal, TCM 30454SA
17	76301172	4	Cone, Bearing - TAM39585
18	76301173	4	Cup, Bearing - 39520
19	76301175	4	Cup, Bearing - 453A
20	76301176	4	Cone, Bearing - 460
21	76301177	4	Washer - 3" O.D. x 1.25" I.D. X .16"
22	76301178	4	Castle Nut, 1-1/4" - 12
23	76101265	4	Pin, Cotter 1/4" X 2"
24	76301179	4	Dust Cap
25	76101113	4	Hex Bolt, 5/16"-18 X 3/4" GR. 5
26	76301189	40	Lug Nut, 3/4"-16
27	600471000	8	GF-641 Grease Fitting
28	600471004	4	Grease Fitting, 1/8"-27
29	7600383216	2	Bushing, Connex 1"

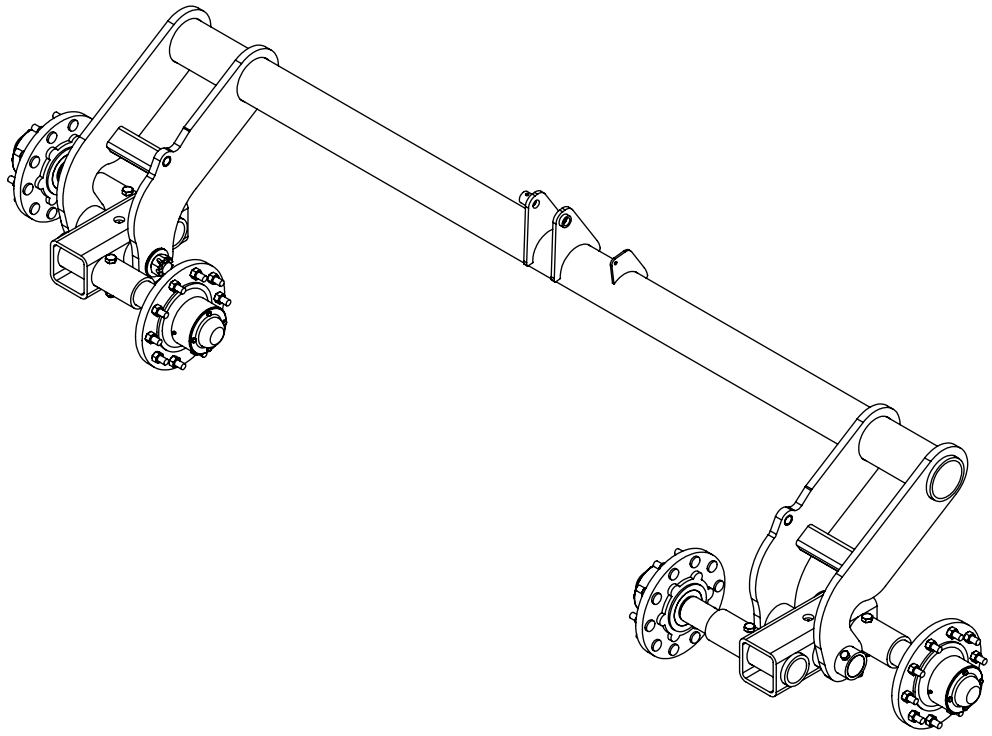

Center Lift Cylinders & Linkage Assembly

Instructions:
-Hardware included in bag 760013040
-Attach lift cylinders and linkages as shown with ports facing forward/up, using parts listed on next page.
-Use pins which come with cylinders - pins shown are for repair only.

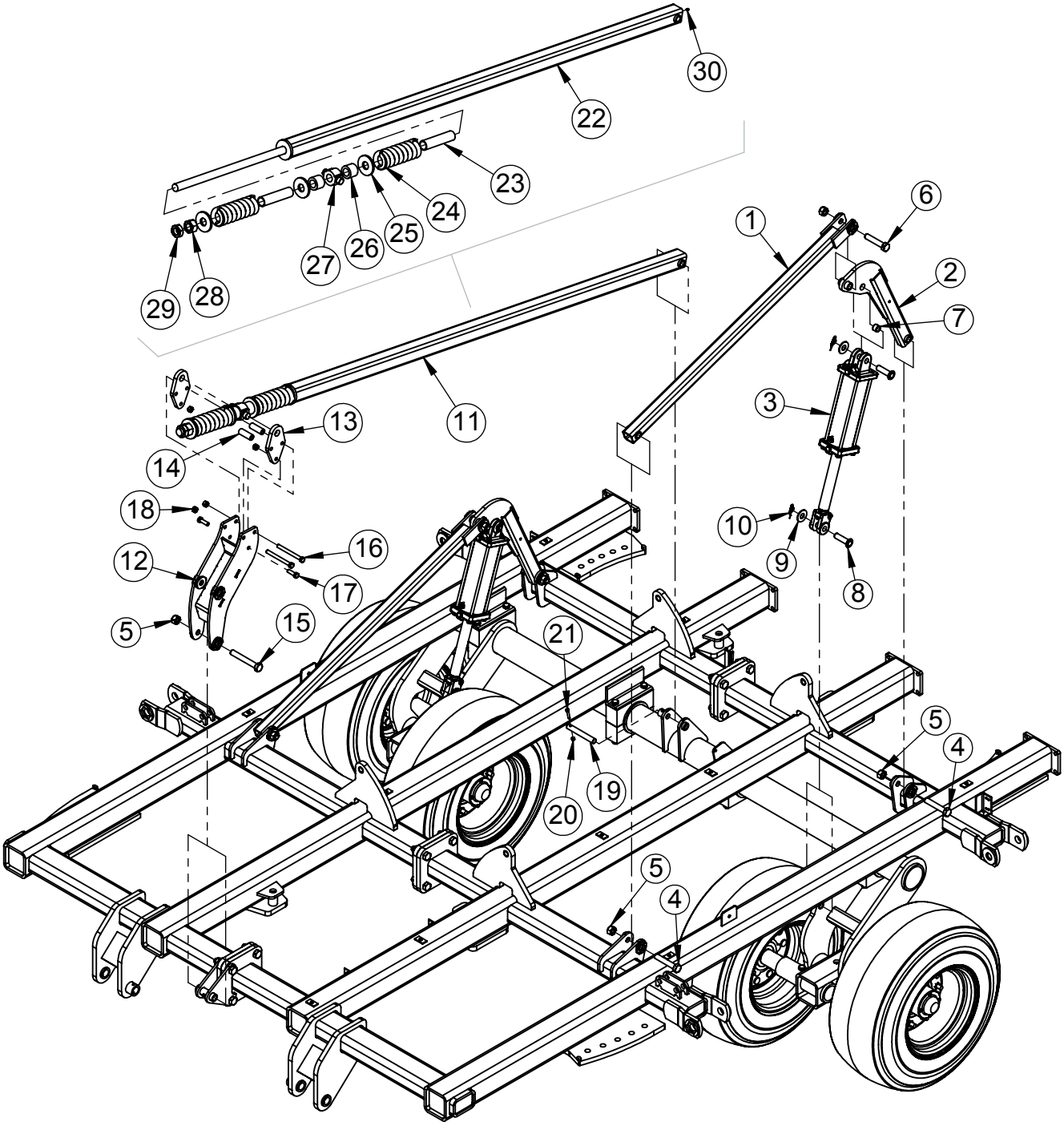

Fig.	Part no.	Qty	Description
1	760016029	2	Center Linkage Tube
2	760013067	2	Rear Cylinder Linkage (Includes Item 7)
3	600474633	2	Cylinder, 4-1/2" X 12"
4	600356029	4	Hex Bolt, 1" X 5-1/2" GR. 5
5	600366032	7	Nut, Toplock 1"
6	600356101	2	Hex Bolt, 1" X 5" GR. 5
7	7600383216	2	Bushing, Connex 1"
8	600383136	4	Pin, 1" X 85mm
9	600381018	4	Flat Washer, 1"
10	600383058	4	Pin, Cotter 5/32" X 2"
11	760013026	1	Self-Leveling Cushion Assembly (Includes Items 22-30)
12	760016055	1	Leveling Pivot Linkage
13	760015195	2	HD Trunnion Plate
14	760015187	2	Self-Leveling Pivot Spacer
15	7600355109	1	Hex Bolt, 1" X 7-1/2" GR. 8
16	600355032	2	Hex Bolt, 5/8" X 6-1/2" GR. 8
17	600356010	2	Hex Bolt, 5/8" X 2" GR. 5
18	600366031	4	Nut, Toplock 5/8"
19	760031114	1	Pin, Leveling Link
20	600366028	1	Nut, Toplock 3/8"
21	600356111	1	Hex Bolt, 3/8" X 2" GR. 5
22	760016072	1	Self-Leveling Tube
23	760015194	2	Spring Sleeve
24	760015188	2	HD Leveling Spring
25	760015193	3	Washer, Leveling
26	760011003	2	Trunnion Spacer
27	760015189	1	HD Trunnion
28	600365022	1	Nut, Standard 1-1/2"-6
29	600365069	1	Nut, Jam 1-1/2"-6
30	600471000	1	Grease Fitting

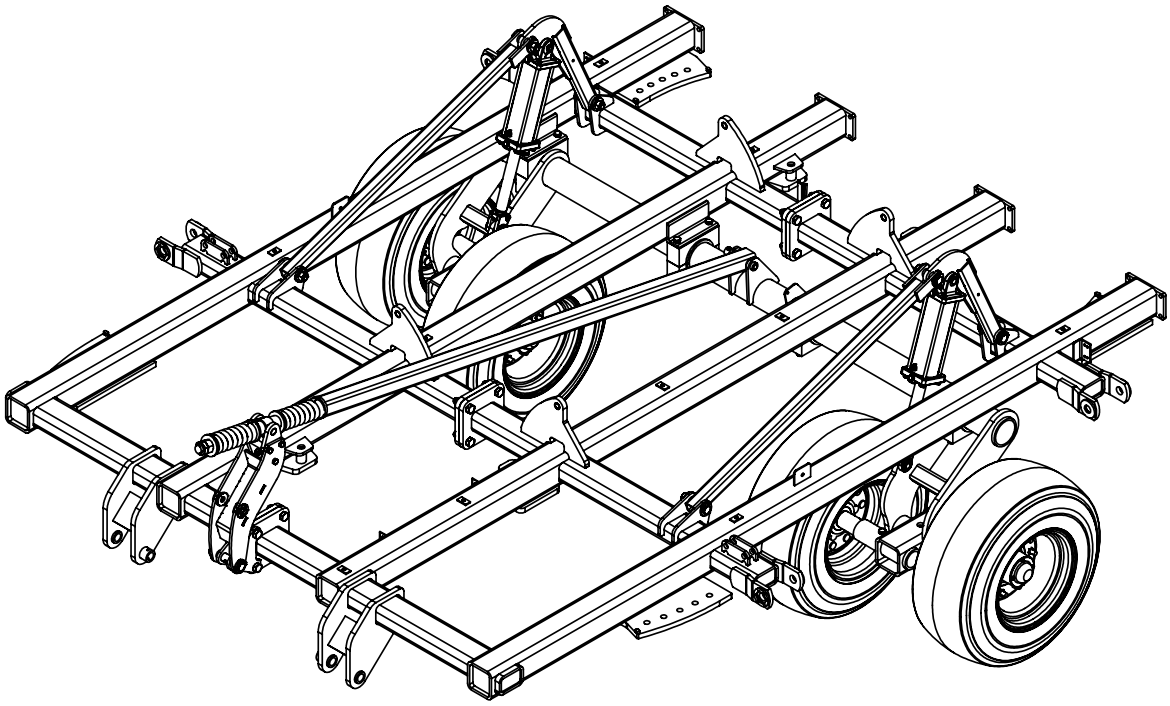

Single Point Assembly

Instructions:
-Hardware included in bag 760013041
-Assemble parts to frame as shown, using hardware listed on next page.
-Slide outer tube (2) over inner tube (1) and insert through upright bracket (3) before bolting on rear tube (4). Connect rear tube to inner tube using 4 holes closest to the bend on the elbow plates (5)

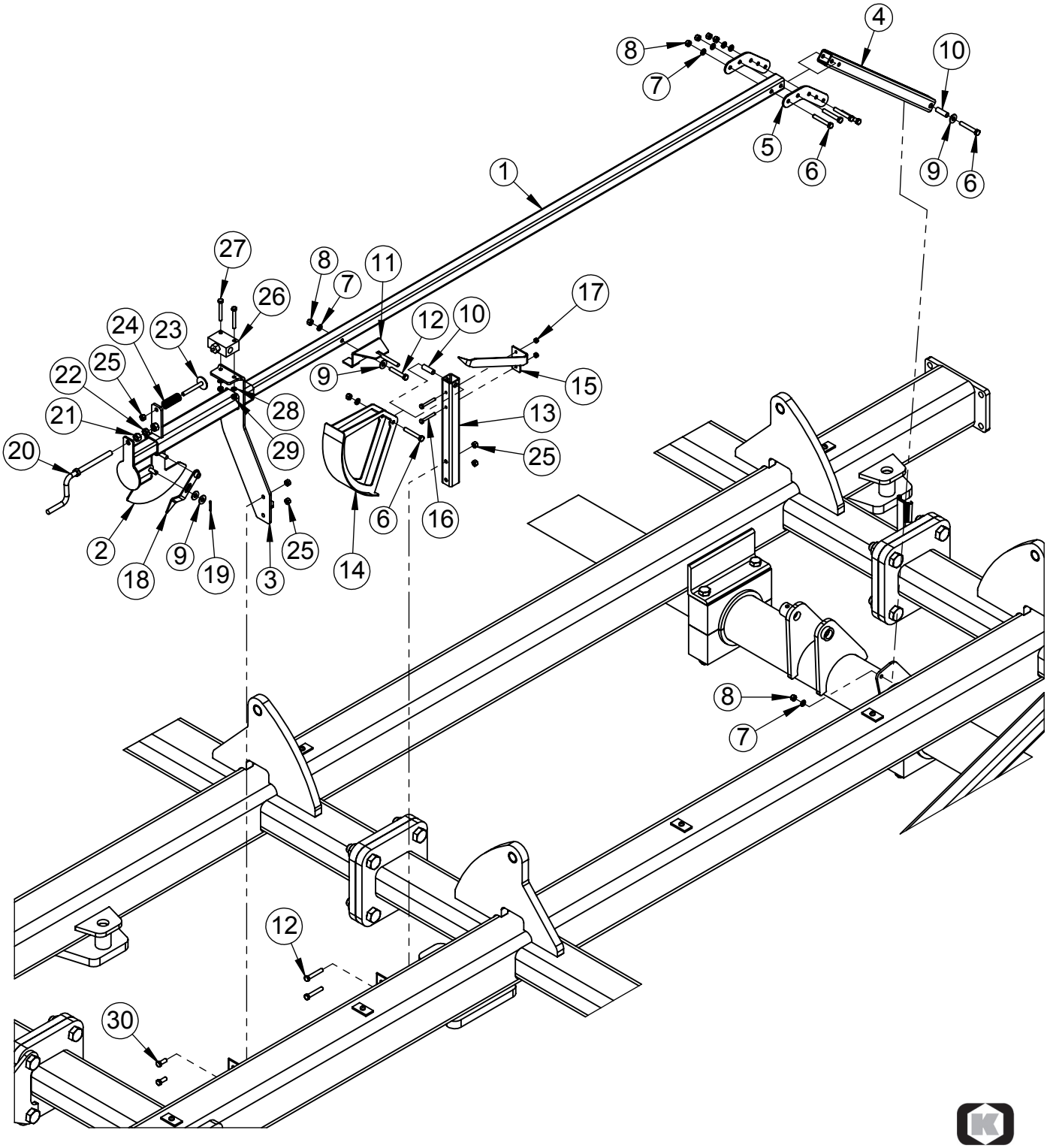

Fig.	Part no.	Qty	Description
1	760016058	1	Single Point Inner Tube
2	760032022	1	Single Point Outer Tube
3	760016034	1	Single Point Upright
4	760015095	1	Single Point Rear Tube
5	760015096	2	Elbow Plate
6	600356007	6	Hex Bolt, 3/8" X 2-1/2" GR. 5
7	600382051	7	Lockwasher, 3/8"
8	600365008	7	Nut, Standard 3/8"
9	600381006	4	Flatwasher, 3/8"
10	760031121	2	Single Point Tube Spacer
11	760016063	1	Depth Gauge Adjustment Wdmt
12	7600356162	3	Hex Bolt, 3/8" X 2-1/4" GR. 5
13	760015166	1	Depth Gauge Tube Stand
14	760016062	1	Depth Gauge
15	760015169	1	Depth Gauge Indicator
16	600356122	2	Hex Bolt, 1/4" X 2" GR. 5
17	600366026	2	Nut, Toplock 1/4"
18	760032027	1	Single Point Indicator
19	600383037	1	Cotter Pin, 1/8" X 1"
20	760032038	1	Single Point Crank
21	600365009	1	Nut, Standard 1/2"
22	7600365078	1	Jam Nut, 1/2"
23	601140555	1	Striker Bolt 3/8" X 3
24	601140556	1	Striker Spring
25	600366028	5	Nut, Toplock 3/8"
26	7600470491	1	Valve, Single Point
27	600356148	2	Bolt, 5/16" X 2-1/2" GR. 5
28	600382050	2	Lockwasher, 5/16"
29	600365007	2	Nut, Standard 5/16"
30	600356020	2	Hex Bolt, 3/8" X 1" GR. 5

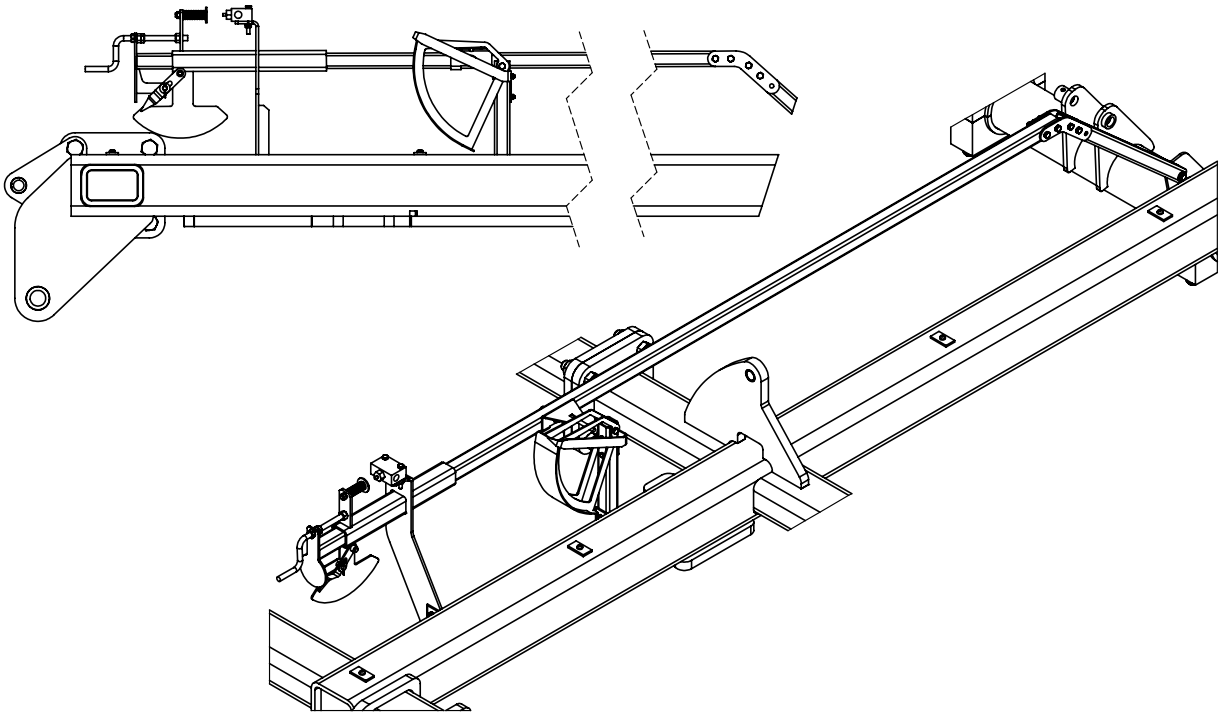

Hitch & Turnbuckle Assembly

Instructions:
-Hardware included in bag 760013042
-Attach hitch, turnbuckle and components to frame as shown, using hardware listed on next page.
-Turnbuckle should be installed with an initial pin-pin length of about 104".
-Optional: After rockshaft, linkages, and hitch are assembled, lift cylinder stops can be installed on center lift cylinders to support the machine instead of shop stands.

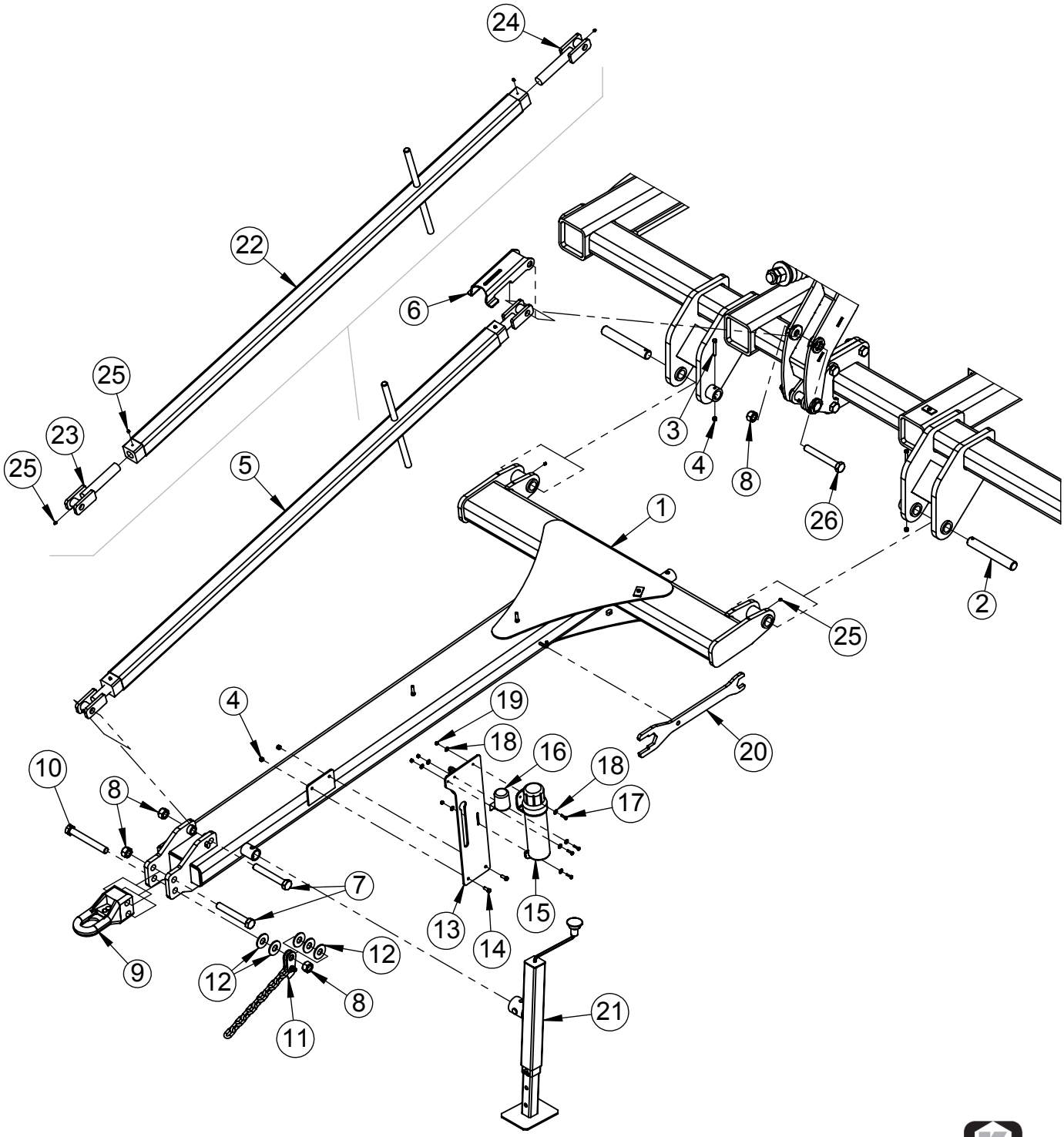

Fig.	Part no.	Qty	Description
1	760013068	1	T-Hitch
2	760015072	2	Hitch Pivot Pin
3	7600356163	2	Hex Bolt, 3/8" X 2-3/4" GR. 5
4	600366028	4	Nut, Toplock 3/8"
5	760033027	1	Turnbuckle Assembly (Includes Items 22-25)
6	760031186	1	Turnbuckle Latch
7	600355025	2	Hex Bolt, 1" X 7" GR. 8
8	600366032	4	Nut, Toplock 1"
9	601140770	1	CAT IV Pindle Style - 2 1/4" (no clevis)
10	600355027	1	Hex Bolt, 1" X 8" GR. 8
11	600461011	1	ASAE Safety Chain Assembly
12	600381018	5	Flat Washer 1"
13	760032039	1	Hydraulic Hose Support Wdmt
14	600356020	2	Hex Bolt, 3/8" X 1" GR. 5
15	600600268	1	Manual Canister
16	760001005	1	Socket, 7-Pin Light Plug Storage
17	600356138	2	Hex Bolt, 1/4" X 1" GR. 5
18	600381023	4	Flat Washer, 1/4"
19	600366026	2	Nut, Toplock 1/4"
20	760031152	1	Adjustment Wrench
21	601231223	1	Jack TWL 190 DL-B
22	760032066	1	Turnbuckle Wdmt
23	760032064	1	Turnbuckle Clevis RH
24	760032065	1	Turnbuckle Clevis LH
25	600471000	6	Grease Fitting
26	7600355109	1	Hex Bolt, 1" X 7-1/2" GR. 8

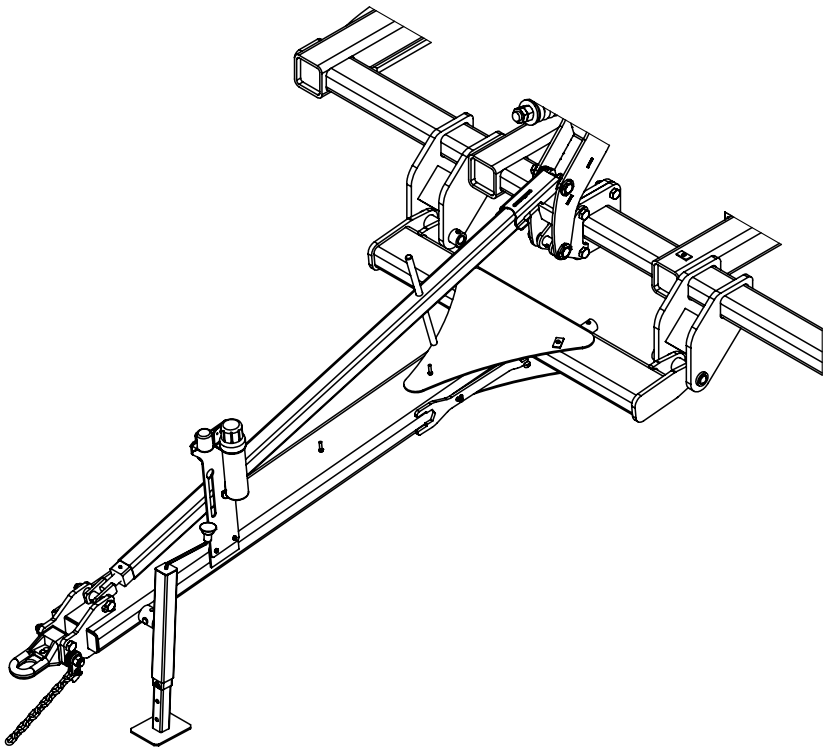

Light Stands & Safety Lock Assembly

Instructions:
-Hardware included in bags 760013048
-Attach light stands and safety locks to center frame.
-IMPORTANT: Light tubes should be mounted on stands as far outwards as possible.
-Disconnect safety pin chain from split ring and route chain through base of plates as shown below. Reconnect chain to split ring to secure pin to frame.

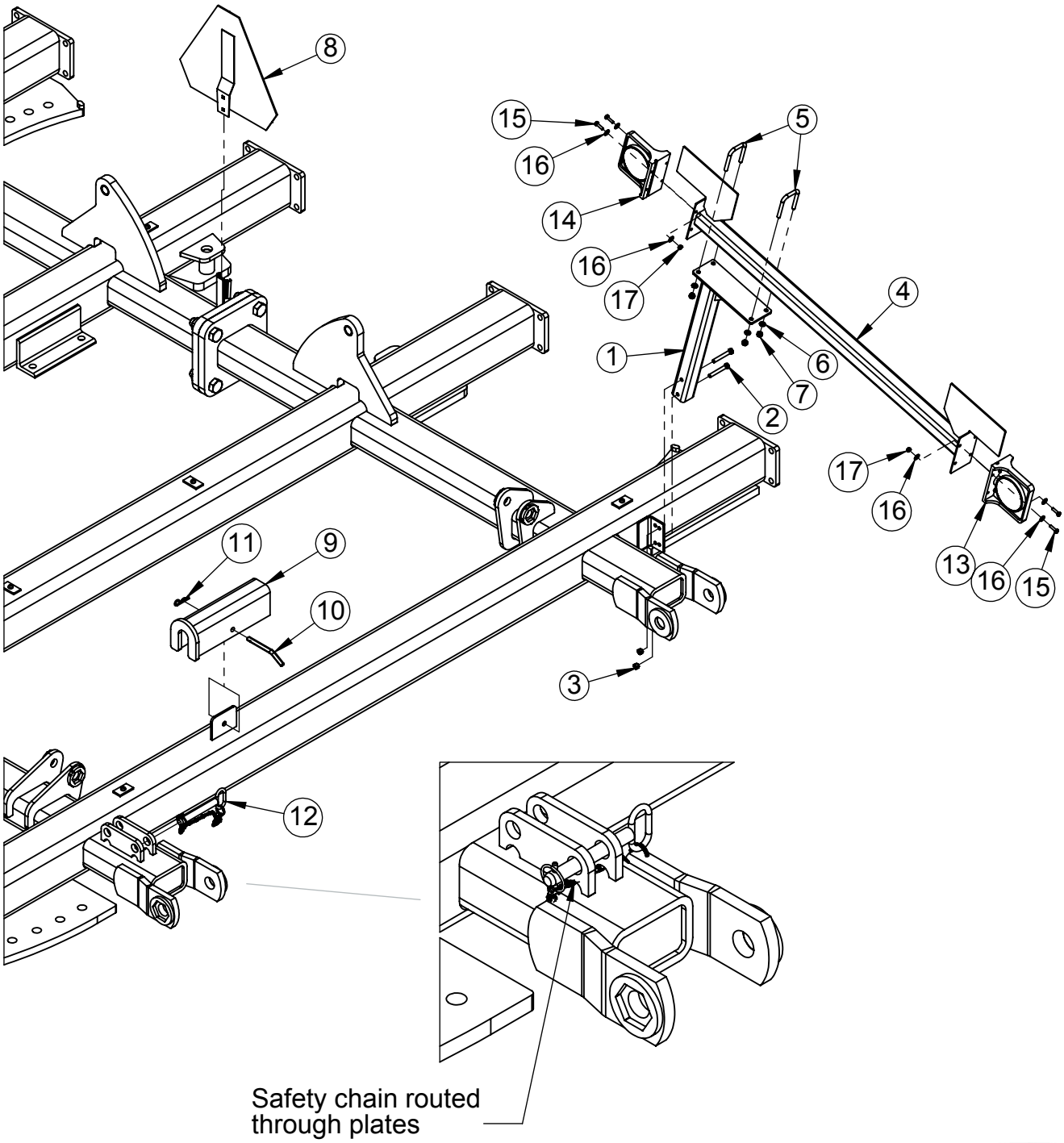

Fig.	Part no.	Qty	Description
1	760016036	2	Light Stand Wdmt
2	7600356163	4	Hex Bolt, 3/8" X 2-3/4" GR. 5
3	600366028	4	Nut, Toplock 3/8"
4	760012035	2	Light Tube Wdmt
5	7600373128	4	U-Bolt, 3/8" X 2" X 3"
6	600382051	8	Lockwasher, 3/8"
7	600365008	8	Nut, Standard 3/8"
8	601140845	1	SMV Sign
9	760016061	2	Safety Lock, 4-1/2" X 8” Cylinder
10	601140780	2	Jack Pin, 1/2"
11	600333011	2	Hair Pin, 4MM X 60MM
12	7600383208	2	Safety Pin w/Chain
13	-	2	Amber Flashing Light (included in Light Kit 760033006)
14	-	2	Red Tail/Brake Light (included in Light Kit 760033006)
15	600356138	8	Bolt, 1/4" X 1" GR. 5
16	600381023	16	Flat Washer, 1/4"
17	600366026	8	Nut, Toplock 1/4"

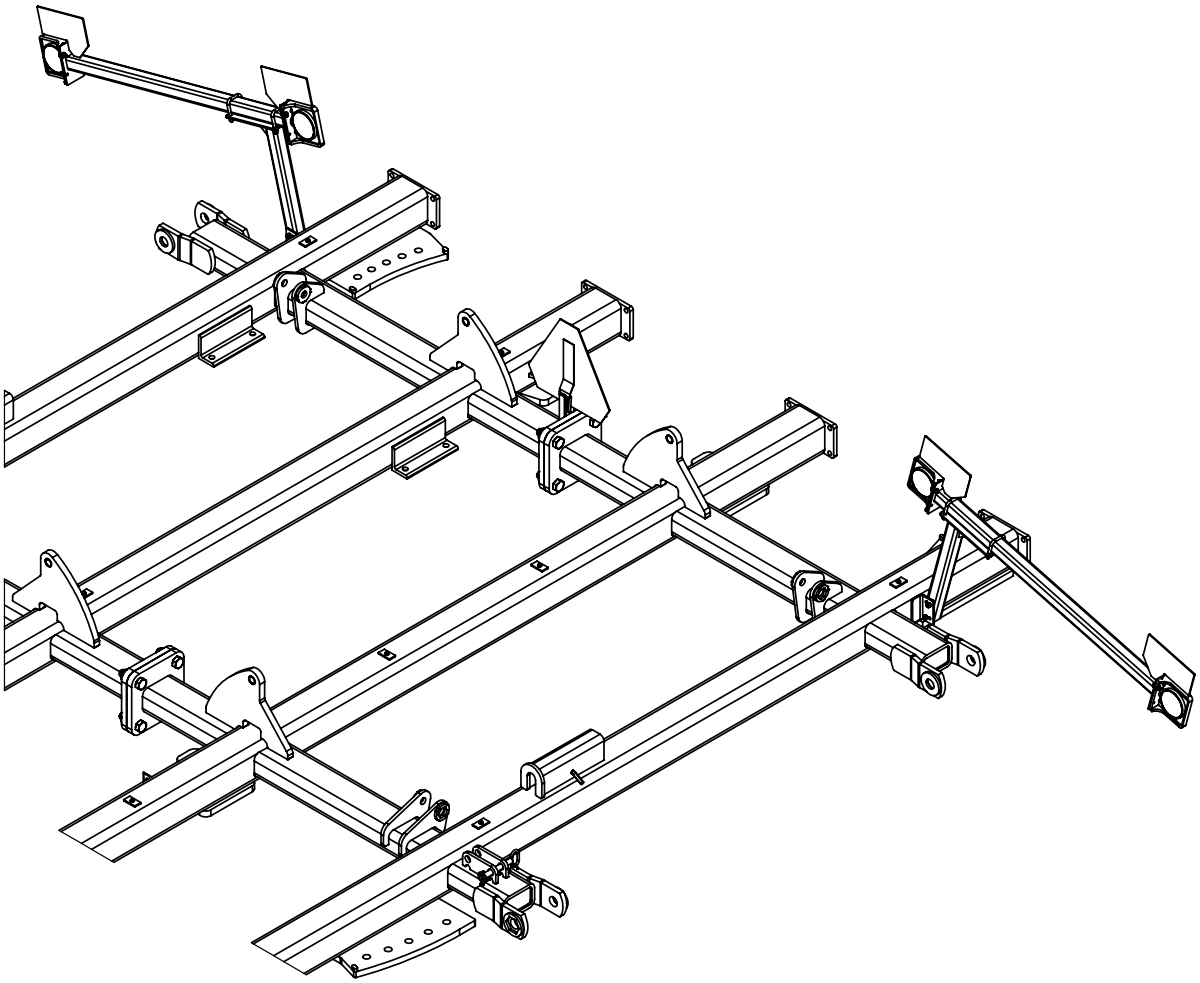

Center Gang & Scraper Assembly

Instructions:

-Hardware included in bags 760013044, 760013046, 760013047

-Attach bearing towers (2 & 3), c-springs (4), and scraper bracket (5) to gang assemblies using hardware listed on next page. Torque bolts (6) to 300 ft-lbs. NOTE: Rotate gang bearing so grease fitting is facing rearwards.

-Attach gang & c-sping assembly to gang tubes using clamp plates and bolts shown. See Appendix C (pg 60) for gang layout details.

-Install scraper tubes and scrapers after gangs have been mounted to machine. NOTE: Offset scrapers should be mounted as close as possible (without touching) to the concave side of the blades .

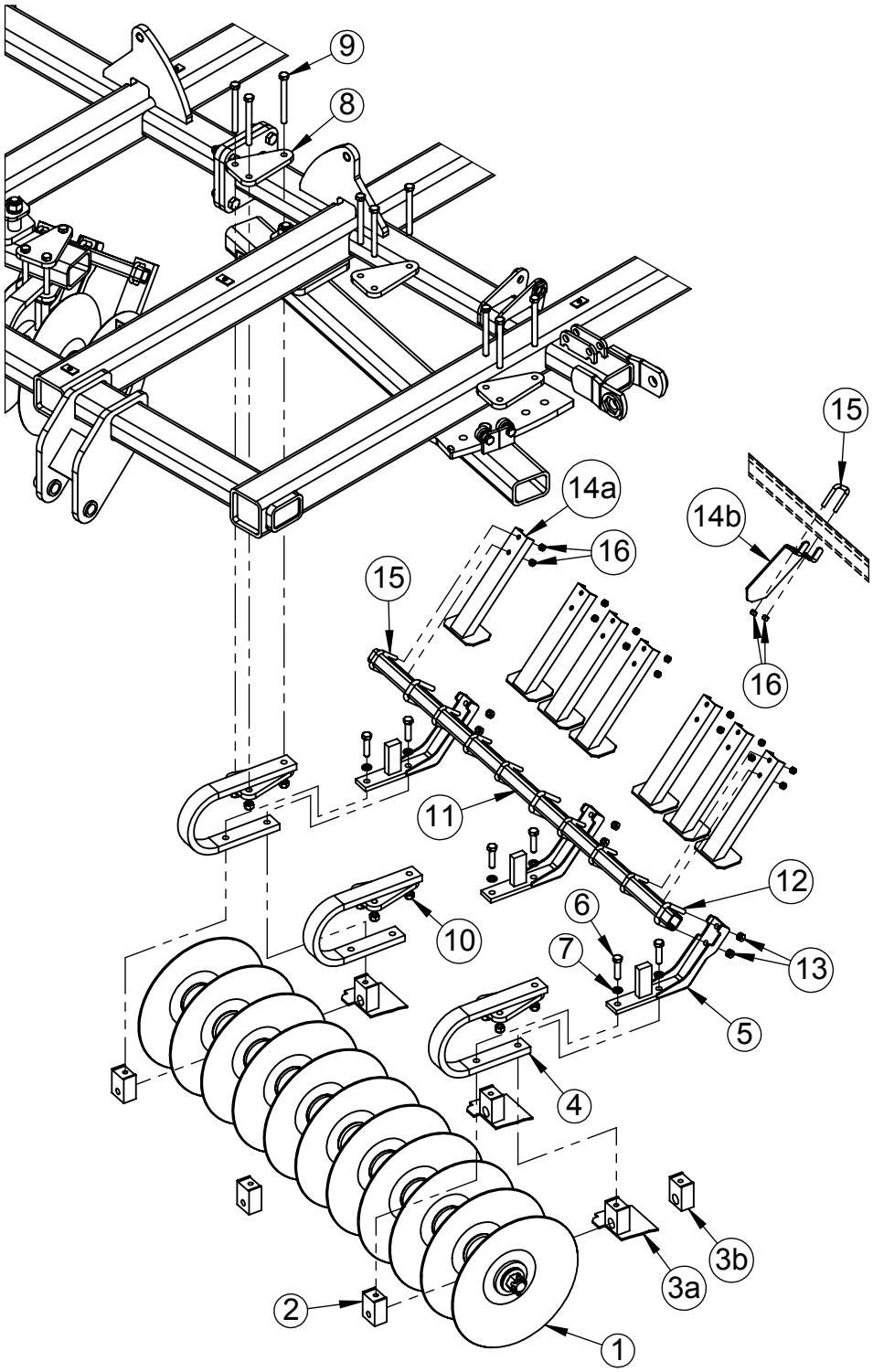

Fig.	Part no.	Qty	Description
1	760013003	2	Gang Assembly, 11-Blade Center Front
-	760013006	2	Gang Assembly, 9-Blade Center Rear - not shown
2	604002087	10	Tower, Gang Bearing
3a	760012000	5	Tower, Gang Bearing Scraper LH (Included in HD Scraper Option)
-	760012001	5	Tower, Gang Bearing Scraper RH (Included in HD Scraper Option) - not shown
3b	604002087	10	Tower, Gang Bearing (Included in Offset Scraper Option)
4	604002040	10	C-Spring
5	760012002	10	Scraper Bracket
6	600355001	20	Hex Bolt, 3/4" X 3" GR. 8
7	600382055	20	Lock Washer, 3/4"
8	604002067	20	Plate, Gang Mount
9	600355067	30	Hex Bolt, 3/4" X 7-1/2" GR. 8
10	600366024	30	Nut, Toplock 3/4"
11	604002182	2	Scraper Tube, 11-Blade (75")
-	604002180	2	Scraper Tube, 9-Blade (83") - not shown
12	600373112	10	U-Bolt, 5/8" X 2" X 3-1/2"
13	600366031	20	Nut, Toplock 5/8"
14a	760012019	26	HD Scraper Wdmt (Included in HD Scraper Option)
14b	760015198	26	Offset Scraper (Included in Offset Scraper Option)
15	600373061	26	U-Bolt, 1/2" X 2" X 3-1/4"
16	600366030	52	Nut, Toplock 1/2"

See following page for gang details

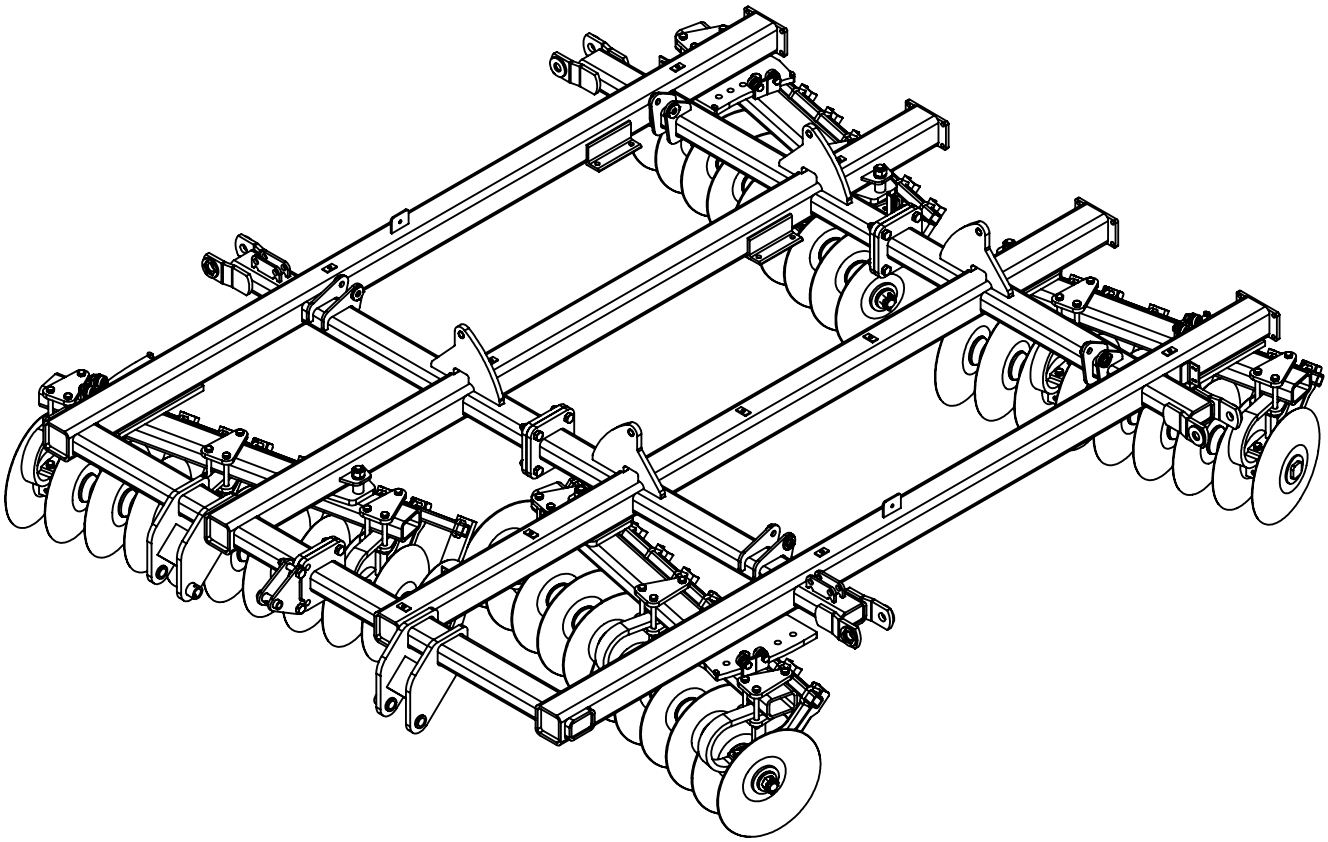

NOTE: The only gang assemblies with an 18" end blade are E & F.

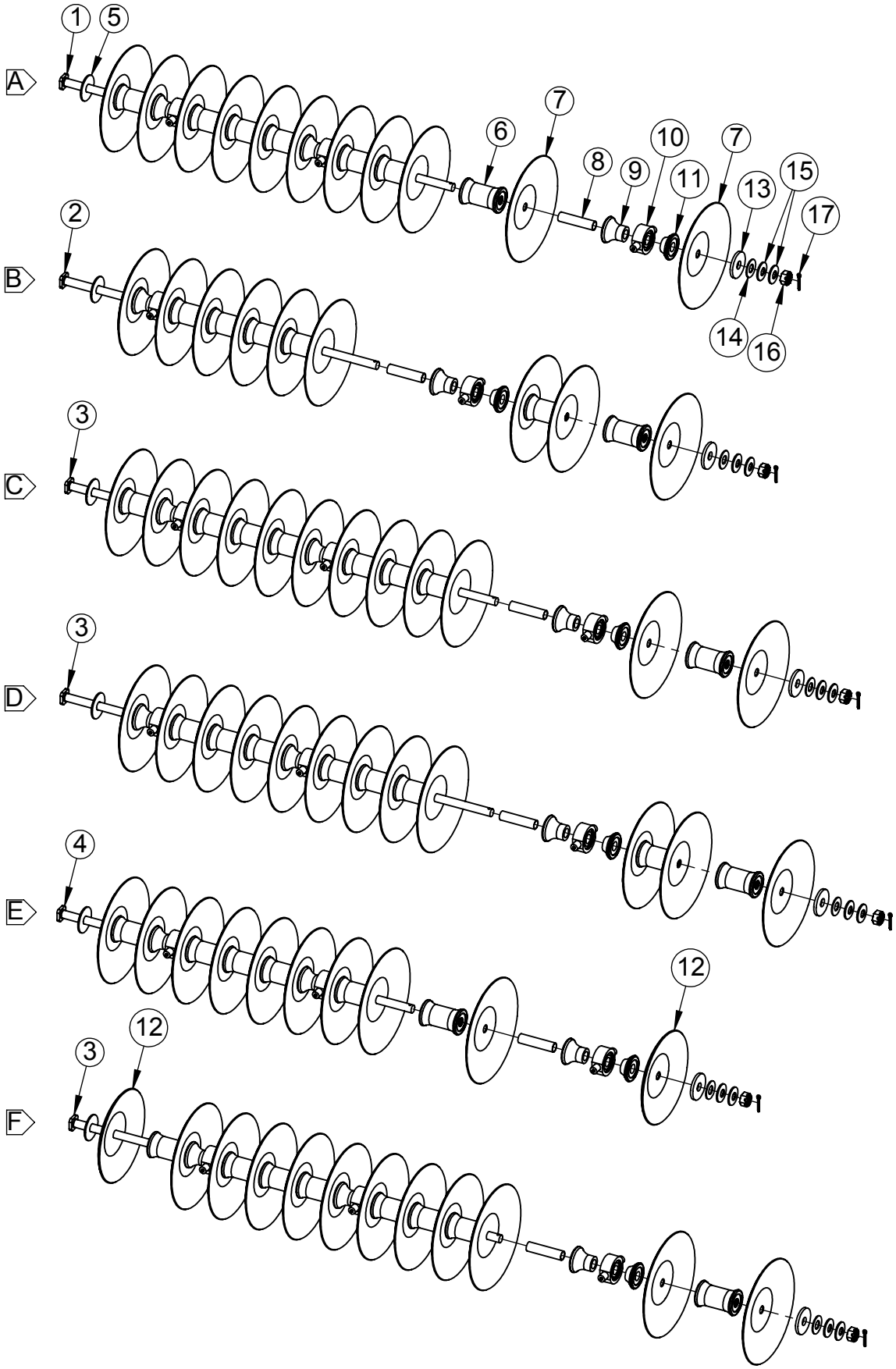

Fig.	Part no.	Qty	Description
1	604002066	1	Shaft, 11-Blade
2	604002064	1	Shaft, 9-Blade
3	604003292	1	Shaft, 12-Blade
4	604002065	1	Shaft, 10-Blade
5	604002194	1*	Washer, Disc Gang, 1/4" Thick
6	604002127	7*	Spool, Full
7	604002124	11*	Blade, Soil Razor 20"
8	604002086	3*	Bushing, Bearing
9	604002132	3*	Spool, Long Half
10	600451005	3*	Trunnion Bearing
11	604002131	3*	Spool Short Half
12	604002125	1*	Blade, Soil Razor 18"
13	604002159	1*	Washer, Disc Gang, 1/2" Thick
14	600381016	1*	Flat Washer, 1-1/2"
15	600381027	2	Washer, Belleville
16	600366017	1	Nut, Slotted 1-1/2" - UNC
17	600383025	1	Pin, Cotter 3/8" X 2-1/2"
		*	Quantities for example only.
A	760013003	2	Gang Assembly, 11-Blade Center Front
B	760013006	2	Gang Assembly, 9-Blade Center Rear
C	760013027	2	Gang Assembly, 12-Blade Inner Wing Front
D	760013028	2	Gang Assembly, 12-Blade Inner Wing Rear
E	760013029	2	Gang Assembly, 10-Blade Outer Wing Front
F	760013030	2	Gang Assembly, 12-Blade Outer Wing Rear

Inner Wing & Gang Tube Assembly

Instructions:
-Hardware included in bag 760013036
-Connect inner wing frames to center frame as shown, using parts listed on next page.
-Attach gang tubes and hinges as shown, using parts listed on next page.

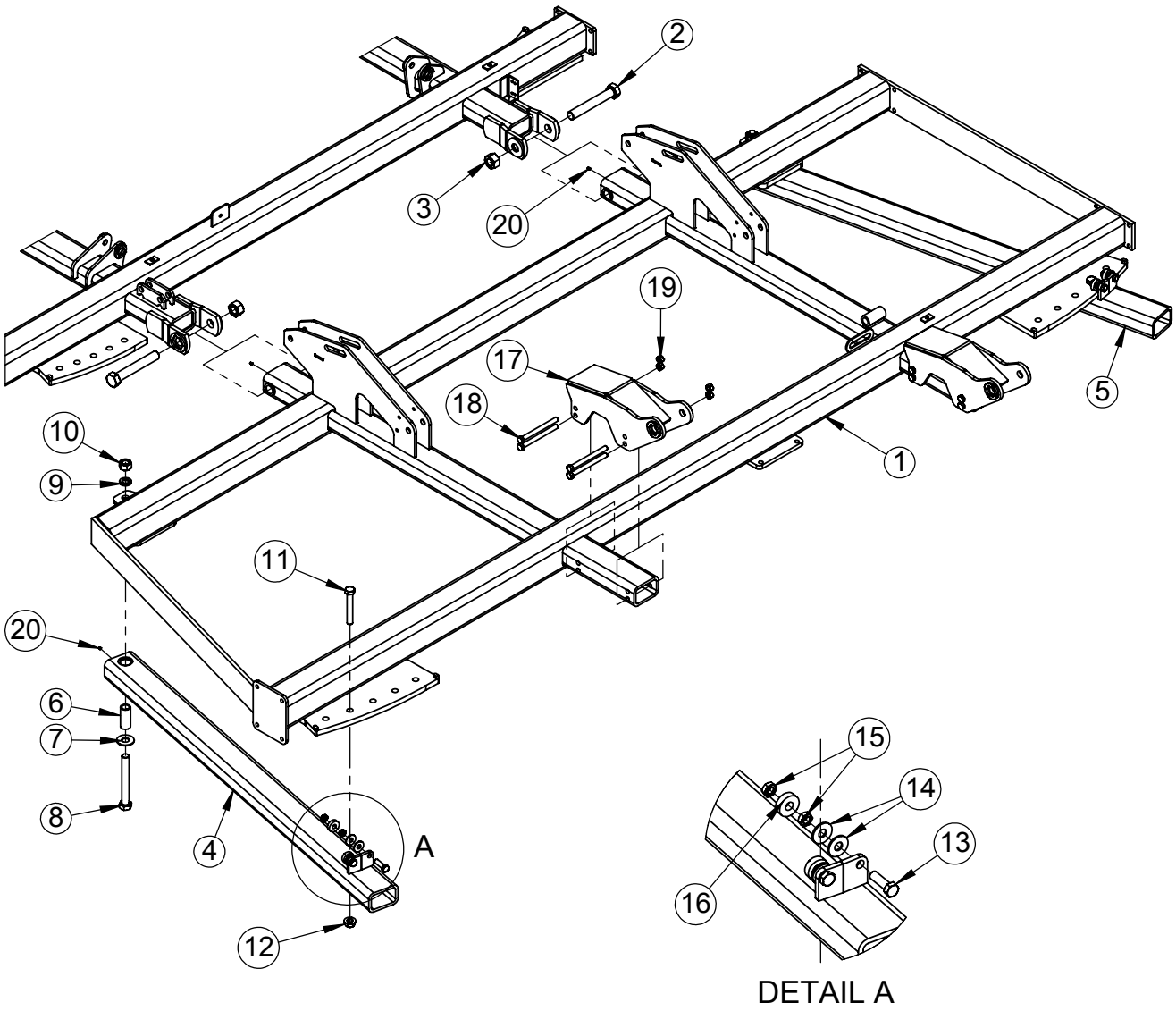

Fig.	Part no.	Qty	Description
1	760013056	1	Inner Wing Frame Assembly, LH
	760013057	1	Inner Wing Frame Assembly, RH (not shown)
2	7600355106	4	Hex Bolt, 1-1/2"-6 X 10-1/2" GR. 8 Special
3	7600366053	4	Nut, Toplock 1-1/2"-6
4	760013063	2	Gang Tube Assembly, Inner Wing Front
5	760013064	2	Gang Tube Assembly, Inner Wing Rear
6	760015081	4	Bushing, Gang Pivot
7	7600381056	4	Flat Washer, 1-1/4" Hardened GR. 9
8	7600355104	4	Hex Bolt, 1-1/4" x 10" GR. 8
9	7600382104	4	Lock Washer, 1-1/4"
10	600365064	4	Nut, Standard 1-1/4" GR. 8
11	600355054	4	Hex Bolt, 1" x 6-1/2" GR. 8
12	7600366052	4	Flange Nut, Spiralock 1"
13	600356011	8	Hex Bolt, 3/4" x 2-1/2" GR. 5 (Full Thread)
14	600381009	16	Flat Washer, 3/4"
15	7600365080	16	Jam Nut, 3/4"
16	100401006	8	Bearing, Gang Adjust
17	760016053	4	Hinge, Inner Wing
18	76101277	16	Hex Bolt, 3/4"-10 X 8-1/2" GR. 5
19	600366024	16	Nut, Toplock 3/4"
20	600471000	8	Grease Fitting (pre-installed)

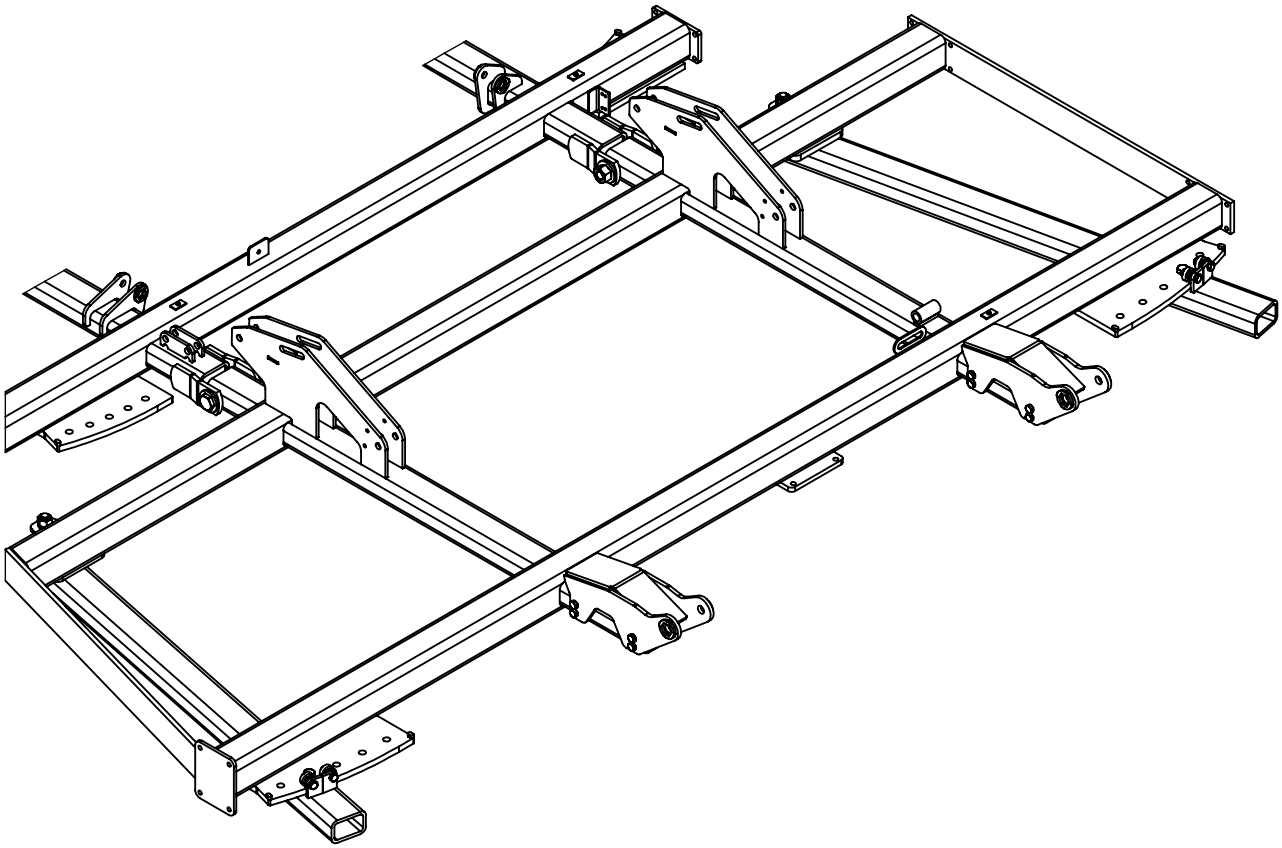

Inner Wing Fold Cylinder Assembly

Instructions:
-Hardware included in bag 760013043
-Attach fold cylinders as shown with ports faceing the rear, using parts listed on next page.
NOTE: On base end of cylinders, use pins which come with cylinders. Pin shown is for repair only.

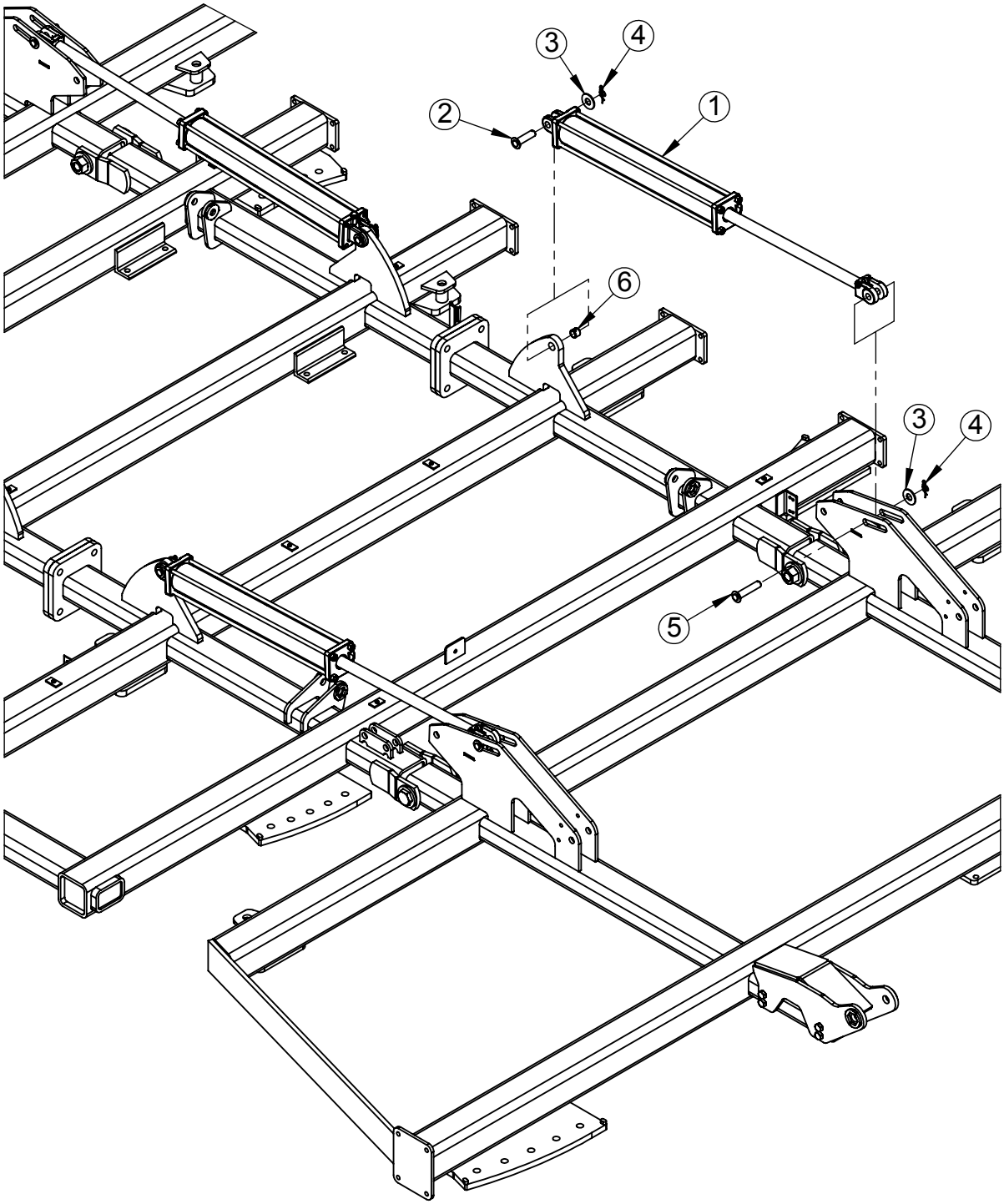

Fig.	Part no.	Qty	Description
1	7600474689	4	Cylinder, 4" X 30" Tie-Rod
2	600383136	4	Pin 1" - 85MM
3	600381018	8	Flat Washer, 1"
4	600383117	8	Clip, Ring Cotter 1"
5	600383119	4	Pin 1" - 112MM
6	7600383216	4	Spring Bushing, 1" (pre-installed)

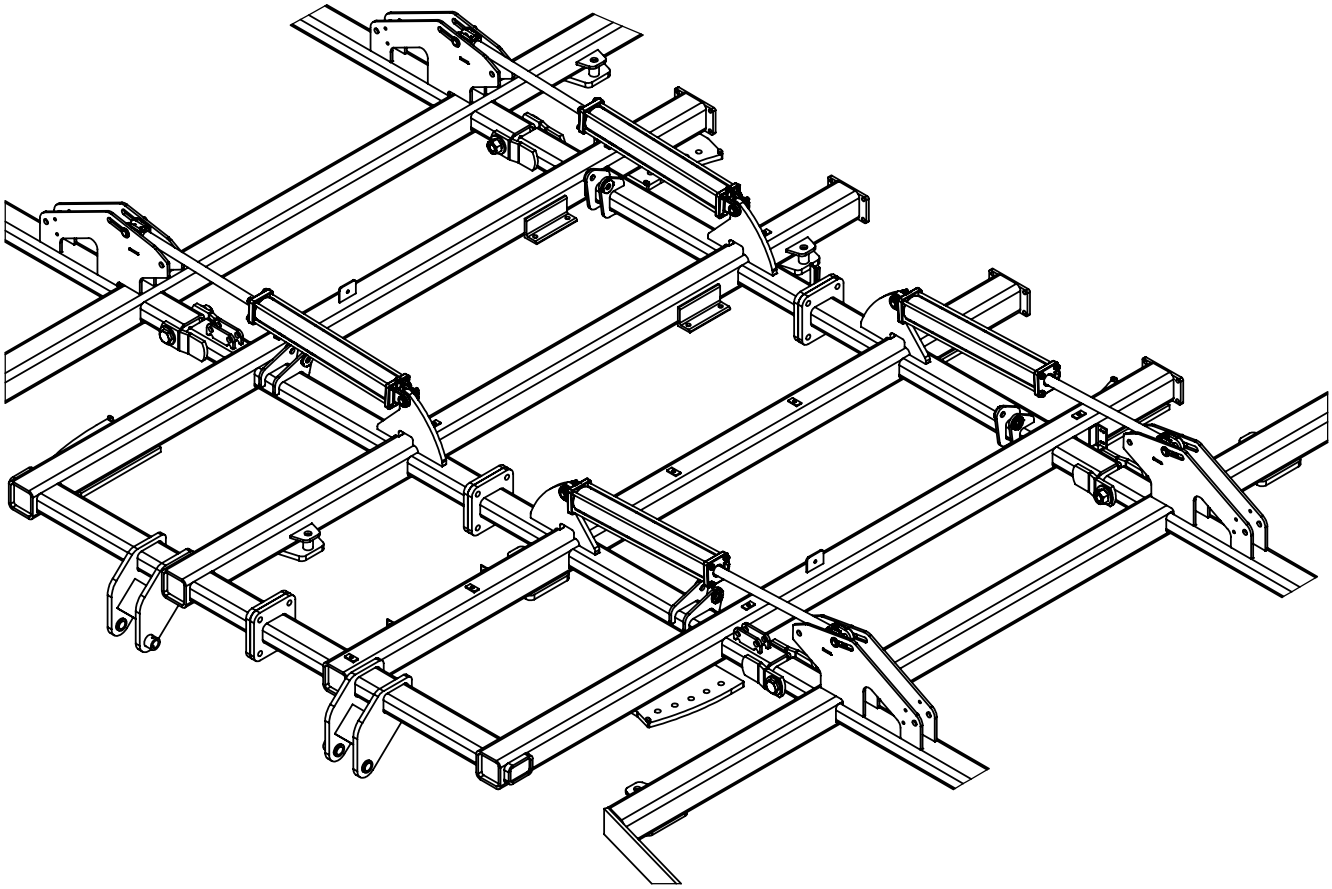

Inner Wing Wheelarm & Cylinder Assembly

Instructions:
-Hardware included in bag 760013039
-Assemble wheelarm and lift cylinder to wing as shown with ports facing up, using parts listed on next page.
-Initially adjust eyebolt (9) so that about 1-1/8" of thread is exposed on the cylinder side. See image on next page.
--IMPORTANT: Install wheels on the spindles so the wheel rims are offset toward the wheel arms (Narrow setting). Torque lug nuts to 125 ft-lbs. Re-torque lug nuts after 10 hours of field use and check every 50 hours

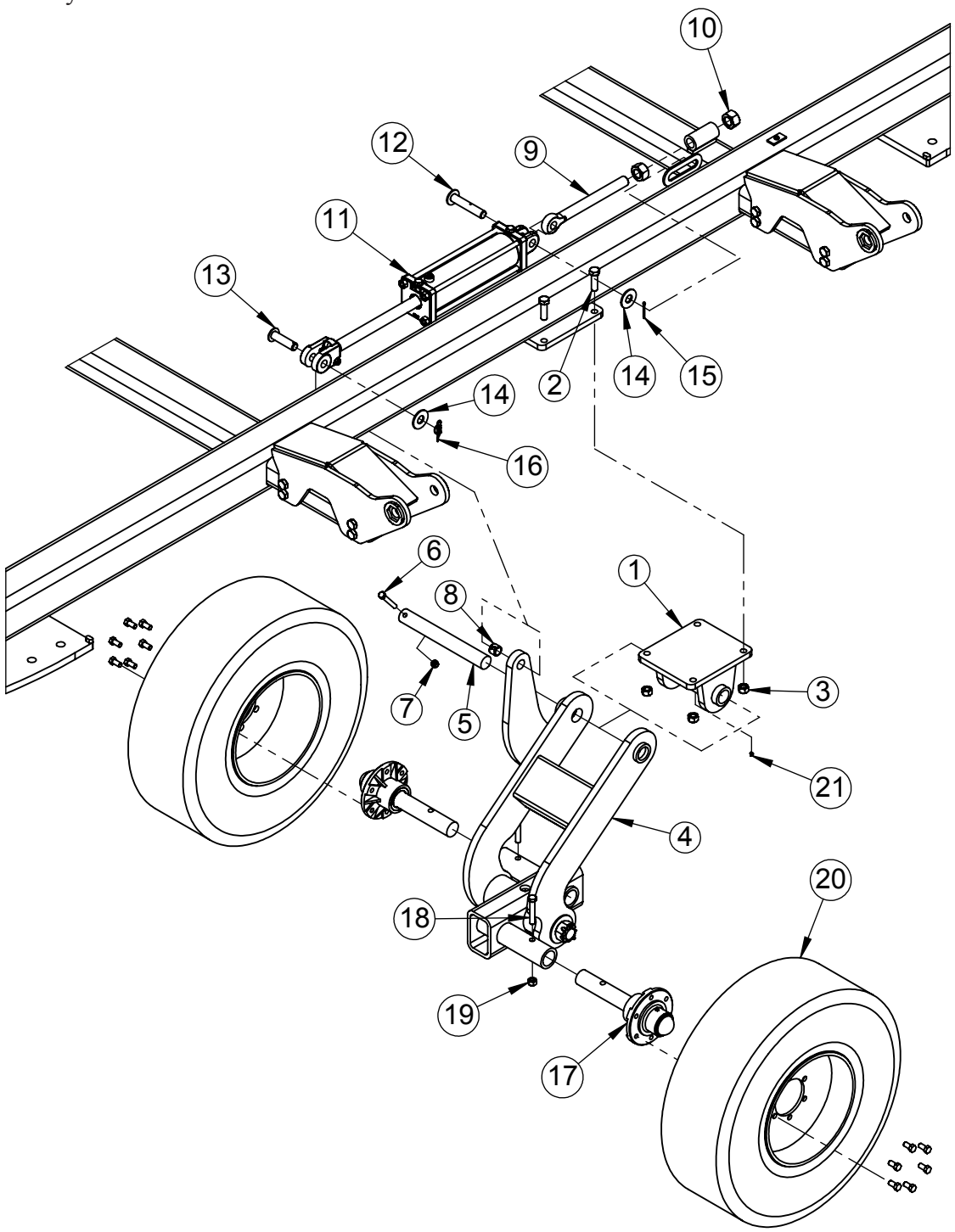

Fig.	Part no.	Qty	Description
1	604002043	2	Mount, Wheel Arm Pivot
2	600355046	8	Hex Bolt, 3/4" X 2-1/2" GR. 8
3	600366024	8	Nut, Toplock 3/4"
4	760013018	1	Wheelarm & Tandem Assembly, Left
	760013019	1	Wheelarm & Tandem Assembly, Right (not shown)
5	604003282	2	Pin, Wheelarm Pivot
6	600356137	2	Hex Bolt, 1/2" X 3-1/2" GR. 5
7	600366030	2	Nut, Toplock 1/2"
8	7600383216	4	Spring Bushing, 1" (pre-installed)
9	600373119	2	Eye Bolt, 1-1/4"-7 UNC
10	600365064	4	Nut, 1-1/4"-7 UNC
11	600474634	2	Cylinder 4” X 12” Tie-Rod Rephase
12	760015197	2	Pin, 1" Extended
13	600383136	2	Pin, 1" X 85MM
14	600381018	4	Flat Washer, 1"
15	600383058	2	Pin, Cotter 5/32 X 2"
16	600383117	2	Clip, Ring Cotter 1"
17	763011121	4	Spindle & Hub Assembly, 5000lb
18	600356116	4	Hex Bolt, 5/8" X 3-1/2" GR. 5
19	600366031	4	Nut, Toplock 5/8"
20	600473111	4	Wheel Assembly, llL-15 Galaxy, 6-Bolt
-	600473112	-	Rim, 15 X 8, 6-Bolt
-	600473105	-	Tire, 11L-15
21	600471000	2	Grease Fitting

See following page for part details

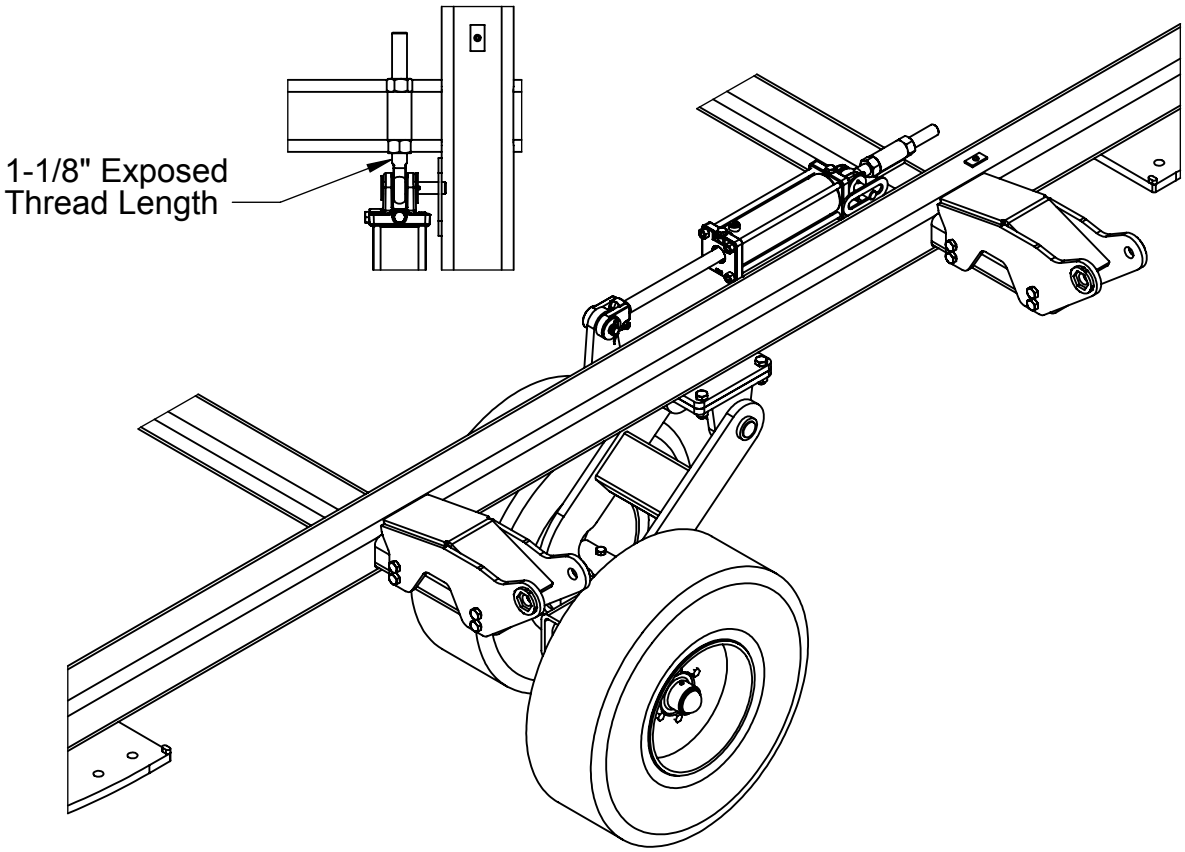

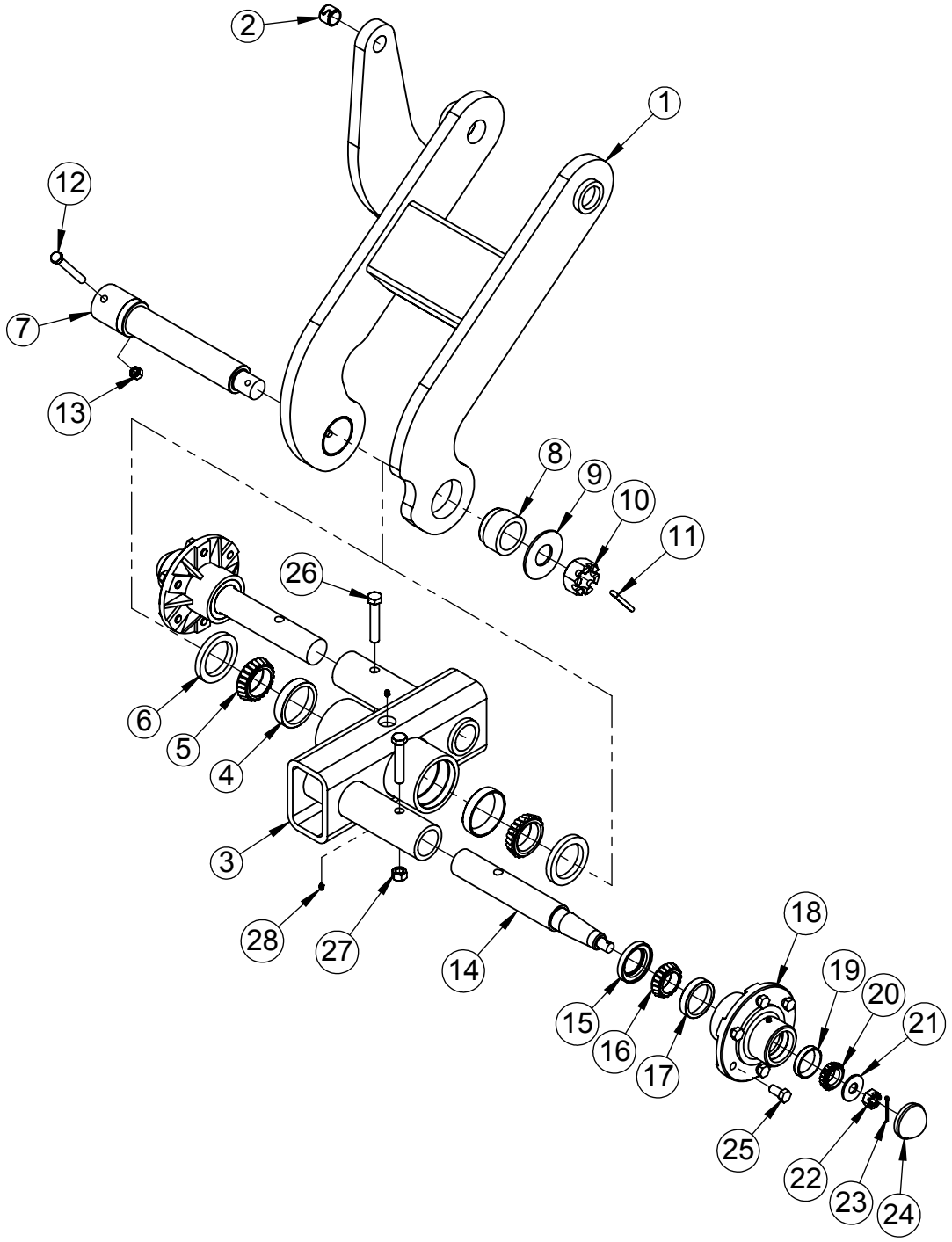
2
1
12
7
13
8
9
10
11
26
6
5
4
3
28
27
14
18
19
20
21
15
16
17
25
22
23
24

Fig.	Part no.	Qty	Description	
1	760016024	1	Wheel Arm Wdmt, LH	
-	760016025	1	Wheel Arm Wdmt, RH (not shown)	
2	7600383216	1	1" Connex Bushing	
3	760016070	1	Wing Tandem Wdmt	
4	76301137	2	Race JLM 506810	
5	76301131	2	Cone LM 506849	
6	600473057	2	Seal, 2-3/4" w/Spring & Alternate Lip	
7	604002047	1	Pin, Tandem Pivot	
8	604002063	1	Bushing, Tandem Pivot	
9	600381054	1	Flatwasher, 1 1/2” SAE	
10	600366036	1	Slotted Nut, 1 1/2” - 12 UNF	
11	600383005	1	Pin, Cotter 5/16” x 2 1/2”	
12	600356105	1	Bolt, 1/2” x 4 GR. 5	
13	600366030	1	Nut, Toplock 1/2”	
14	763012199	2	Spindle 5000lb	
-	763012198	-	Spindle Assembly Complete (Includes Items 14, 21, 22, 23)	
15	7600473135	2	Seal, 2" w/Spring & Alternate Lip	
16	76301129	2	Cone LM 501349	
17	76301135	2	Race LM 501310	
18	763011269	2	Hub 5000lb (Includes Items 17, 18, 19, 25, 28)	
-	763011609	-	Hub 5000lb, Complete (Includes Items 15, 16, 18, 20, 24)	
-	760013002	-	Kit, 6-Bolt Hub Bearing (Includes Items 15, 16, 17, 19, 20, 21, 22, 23, 24)	
19	76301134	2	Race LM 67010	
20	76301132	2	Cone LM 67048	
21	76301157	2	Flatwasher, 2" OD x 13/16" ID	
22	76301153	2	Slotted Nut, 3/4” - 16 UNF	
23	76101249	2	Pin, Cotter 5/32” x 1 3/4”	
24	76301143	2	Dust Cap	
25	76301151	12	Lug Bolt, 9/16”-18	
26	600356116	2	Bolt, 5/8” x 3 1/2” GR. 5	
27	600366031	2	Nut, Toplock 5/8”	Quantities listed are for one complete
28	600471000	3	Grease Fitting	wing wheelarm & tandem ssembly

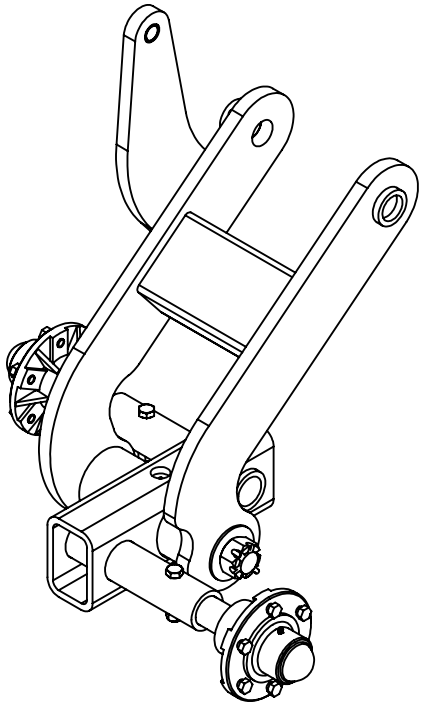

Inner Wing Gang & Scraper Assembly

Instructions:

-Hardware included in bags 760013045, 760013046, 760013047

-Attach bearing towers (2 & 3), c-springs (4), and scraper bracket (5) to gang assemblies using hardware listed on next page. Torque bolts (6) to 300 ft-lbs. NOTE: Rotate gang bearing so grease fitting is facing rearwards.

-Attach gang & c-sping assembly to gang tubes using clamp plates and bolts shown. See Appendix C (pg 60) for gang layout details.

-Install scraper tubes and scrapers after gangs have been mounted to machine. NOTE: Offset scrapers should be mounted as close as possible (without touching) to the concave side of the blades .

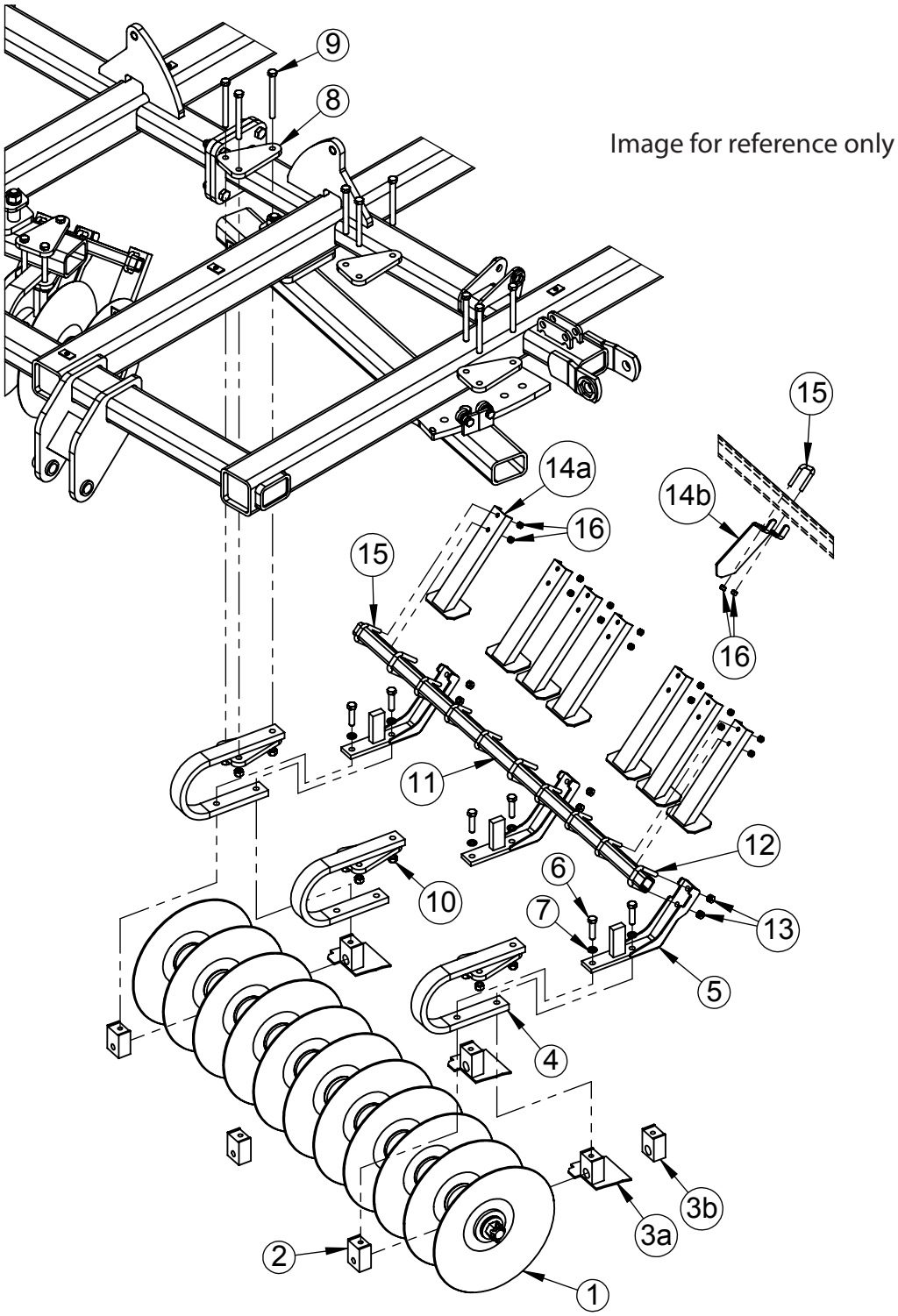

Fig.	Part no.	Qty	Description
1	760013027	2	Gang Assembly, 12-Blade Inner Wing Front - not shown
-	760013028	2	Gang Assembly, 12-Blade Inner Wing Rear - not shown
2	604002087	12	Tower, Gang Bearing
3a	760012000	6	Tower, Gang Bearing Scraper LH (Included in HD Scraper Option)
-	760012001	6	Tower, Gang Bearing Scraper RH (Included in HD Scraper Option) - not shown
3b	604002087	12	Tower, Gang Bearing (Included in Offset Scraper Option)
4	604002040	12	C-Spring
5	760012002	12	Scraper Bracket
6	600355001	24	Hex Bolt, 3/4" X 3" GR. 8
7	600382055	24	Lock Washer, 3/4"
8	604002067	24	Plate, Gang Mount
9	600355067	36	Hex Bolt, 3/4" X 7-1/2" GR. 8
10	600366024	36	Nut, Toplock 3/4"
11	604002190	4	Scraper Tube, 12-Blade (75")
12	600373112	12	U-Bolt, 5/8" X 2" X 3-1/2"
13	600366031	24	Nut, Toplock 5/8"
14a	760012019	36	HD Scraper Wdmt (Included in HD Scraper Option)
14b	760015198	36	Offset Scraper (Included in Offset Scraper Option)
15	600373061	36	U-Bolt, 1/2" X 2" X 3-1/4"
16	600366030	72	Nut, Toplock 1/2"

See pages 20 & 21 for gang details

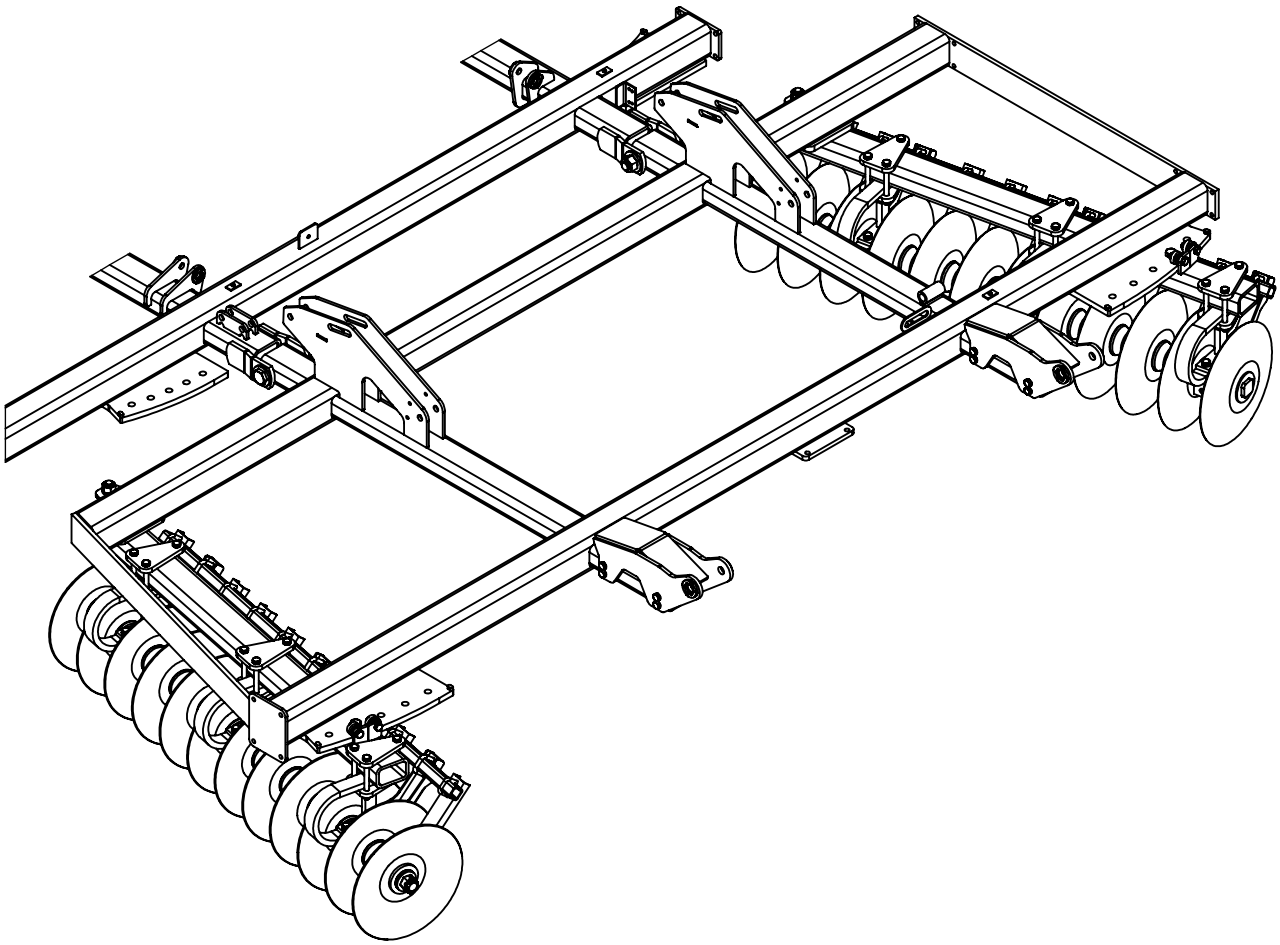

Outer Wing & Gang Tube Assembly

Instructions:
-Hardware included in bag 760013037
-Connect outer wing frames to inner frames as shown, using parts listed on next page.
-Attach gang tubes as shown, using parts listed on next page.

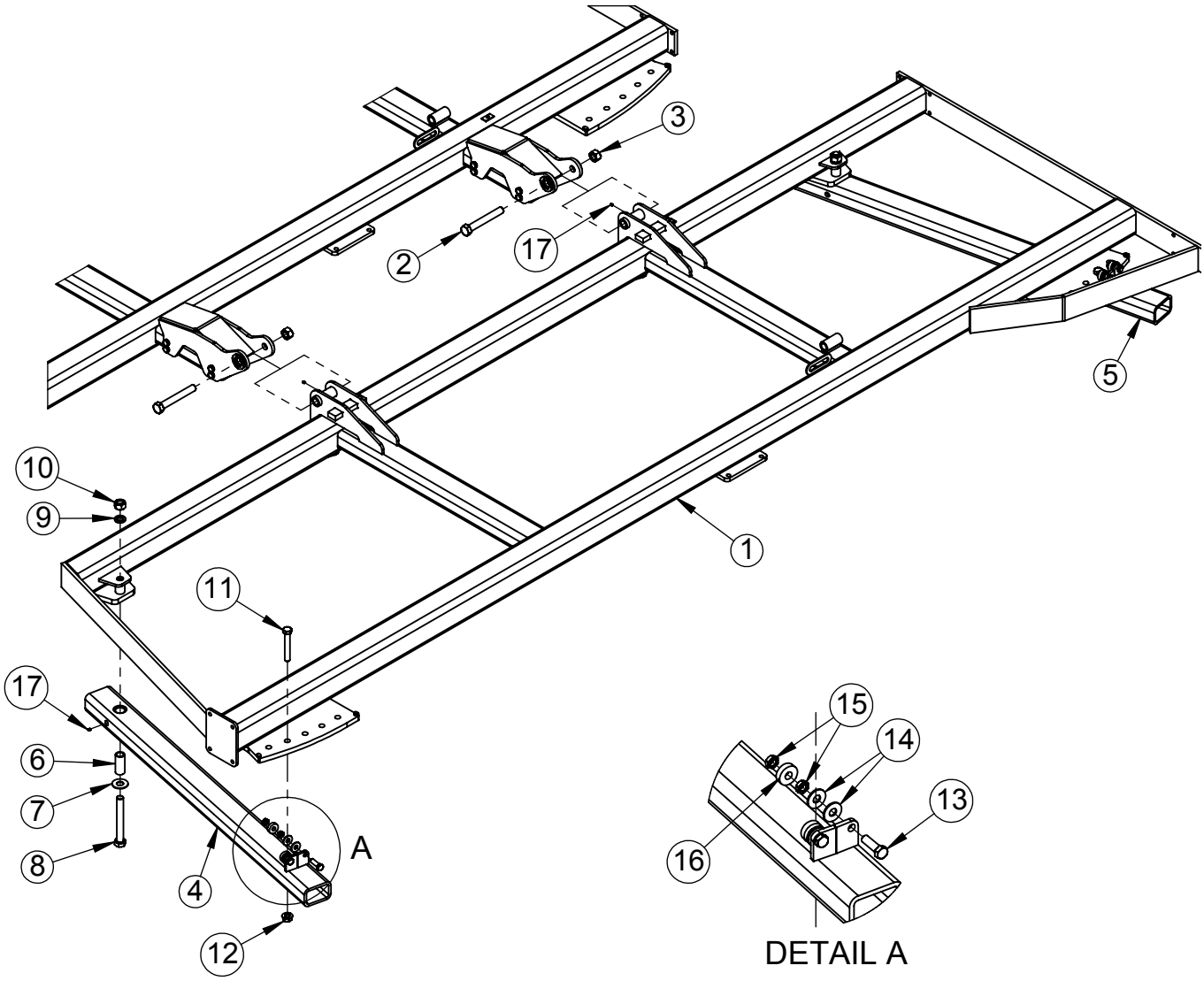

Fig.	Part no.	Qty	Description
1	760013058	1	Outer Wing Frame Assembly, LH
	760013059	1	Outer Wing Frame Assembly, RH (not shown)
2	7600355107	4	Hex Bolt, 1-1/4"-7 X 9" GR. 8 Special
3	600366033	4	Nut, Toplock 1-1/4"-7
4	760013065	2	Gang Tube Assembly, Outer Wing Front
5	760013066	2	Gang Tube Assembly, Outer Wing Rear
6	760015081	4	Bushing, Gang Pivot
7	7600381056	4	Flat Washer, 1-1/4" Hardened GR. 9
8	7600355104	4	Hex Bolt, 1-1/4" x 10" GR. 8
9	7600382104	4	Lock Washer, 1-1/4"
10	600365064	4	Nut, Standard 1-1/4" GR. 8
11	600355054	4	Hex Bolt, 1" x 6-1/2" GR. 8
12	7600366052	4	Flange Nut, Spiralock 1"
13	600356011	8	Hex Bolt, 3/4" x 2-1/2" GR. 5 (Full Thread)
14	600381009	16	Flat Washer, 3/4"
15	7600365080	16	Jam Nut, 3/4"
16	100401006	8	Bearing, Gang Adjust
17	600471000	8	Grease Fitting (pre-installed)

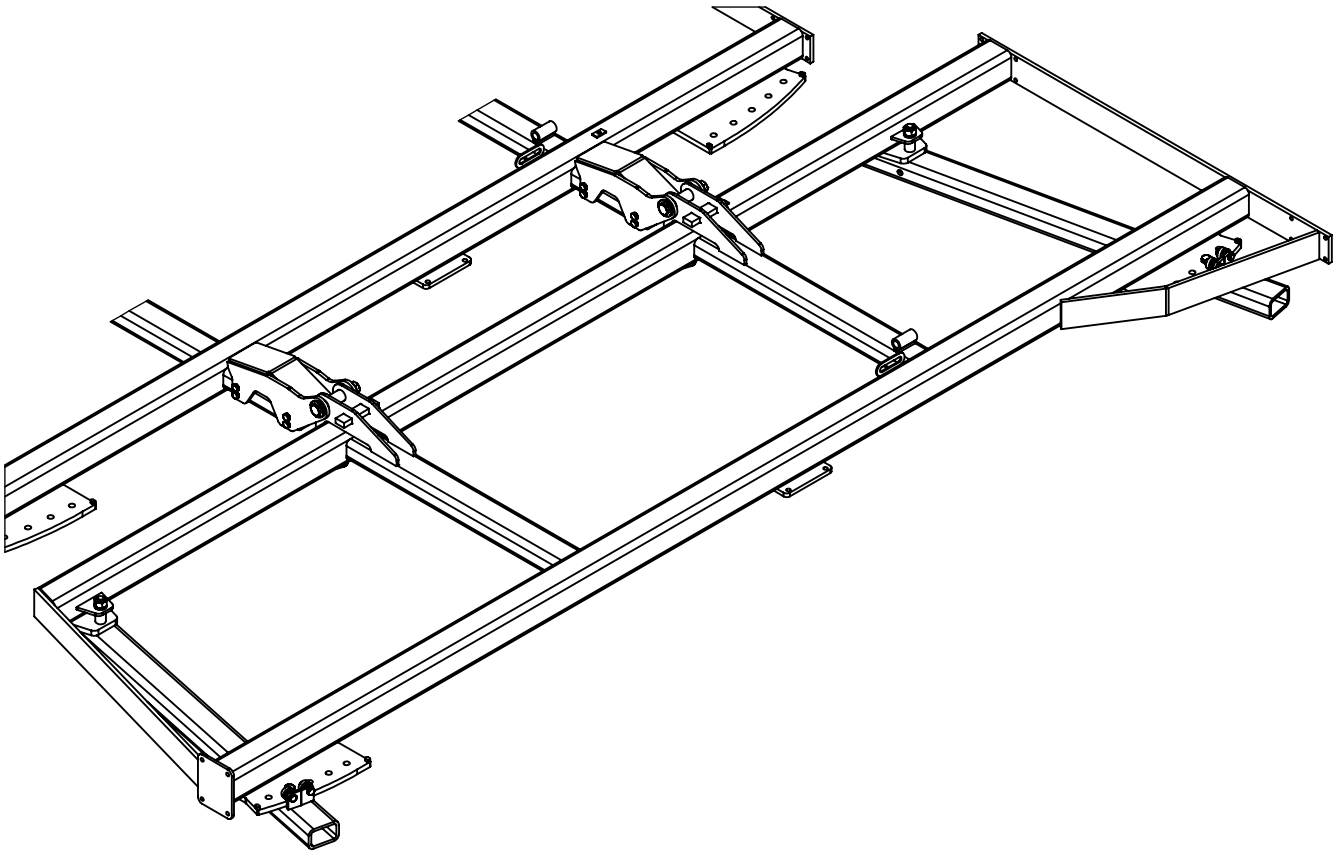

Outer Wing Fold Cylinder Assembly

Instructions:
-Hardware included in bag 760013043
-Attach fold cylinders, with ports facing the rear, and fold link as shown , using parts listed on next page.
-Install wing stands as shown.

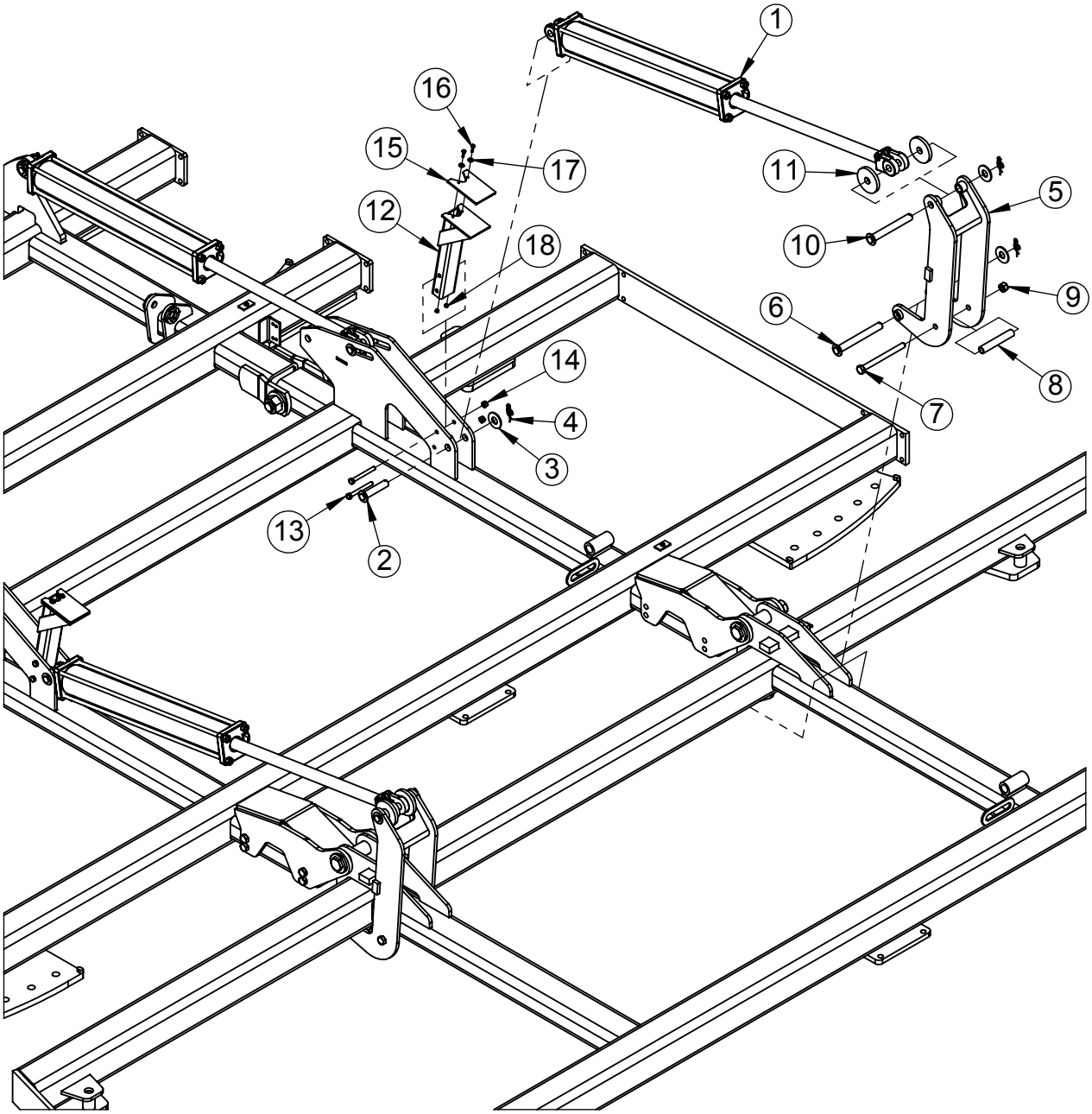

Fig.	Part no.	Qty	Description
1	7600474689	4	Cylinder, 4" X 30" Tie-Rod
2	600383119	4	Pin 1" - 112MM
3	600381018	12	Flat Washer, 1"
4	600383117	12	Clip, Ring Cotter 1"
5	760016059	4	Link, Outer Fold
6	600383114	4	Pin 1" - 216MM
7	76101277	4	Hex Bolt, 3/4"-10 X 8-1/2" GR. 5
8	760015164	4	Spacing, Outer Fold Link
9	600366024	4	Nut, Toplock 3/4"
10	600383102	4	Pin 1" - 195MM
11	760031147	8	Roller Disc
12	760016060	4	Wing Stand
13	600356030	8	Hex Bolt, 1/2"-13 X 4-1/2" GR. 5
14	600366030	8	Nut, Toplock 1/2"
15	760011199	4	Pad, Wing Stand
16	600356138	8	Hex Bolt, 1/4"-20 X 1" GR. 5
17	600381023	8	Flat Washer, 1/4"
18	600366026	8	Nut, Toplock 1/4"

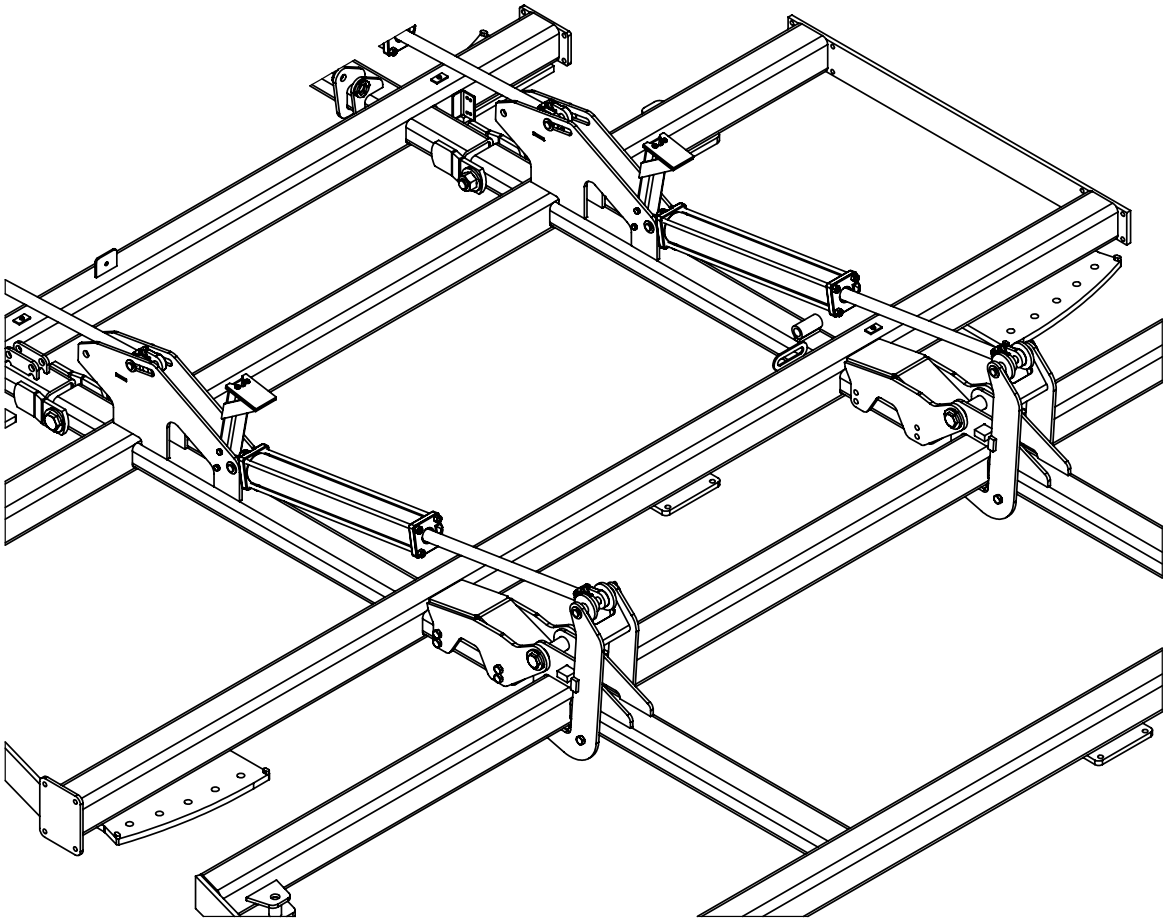

Outer Wing Wheelarm & Cylinder Assembly

Instructions:
-Hardware included in bag 760013039
-Assemble wheelarm and lift cylinder to wing as shown with ports facing up, using parts listed on next page.
-Initially adjust eyebolt (9) so that about 1-1/8" of thread is exposed on the cylinder side. See image on next page.
--IMPORTANT: Install wheels on the spindles so the wheel rims are offset toward the wheel arms (Narrow setting). Torque lug nuts to 125 ft-lbs. Re-torque lug nuts after 10 hours of field use and check every 50 hours

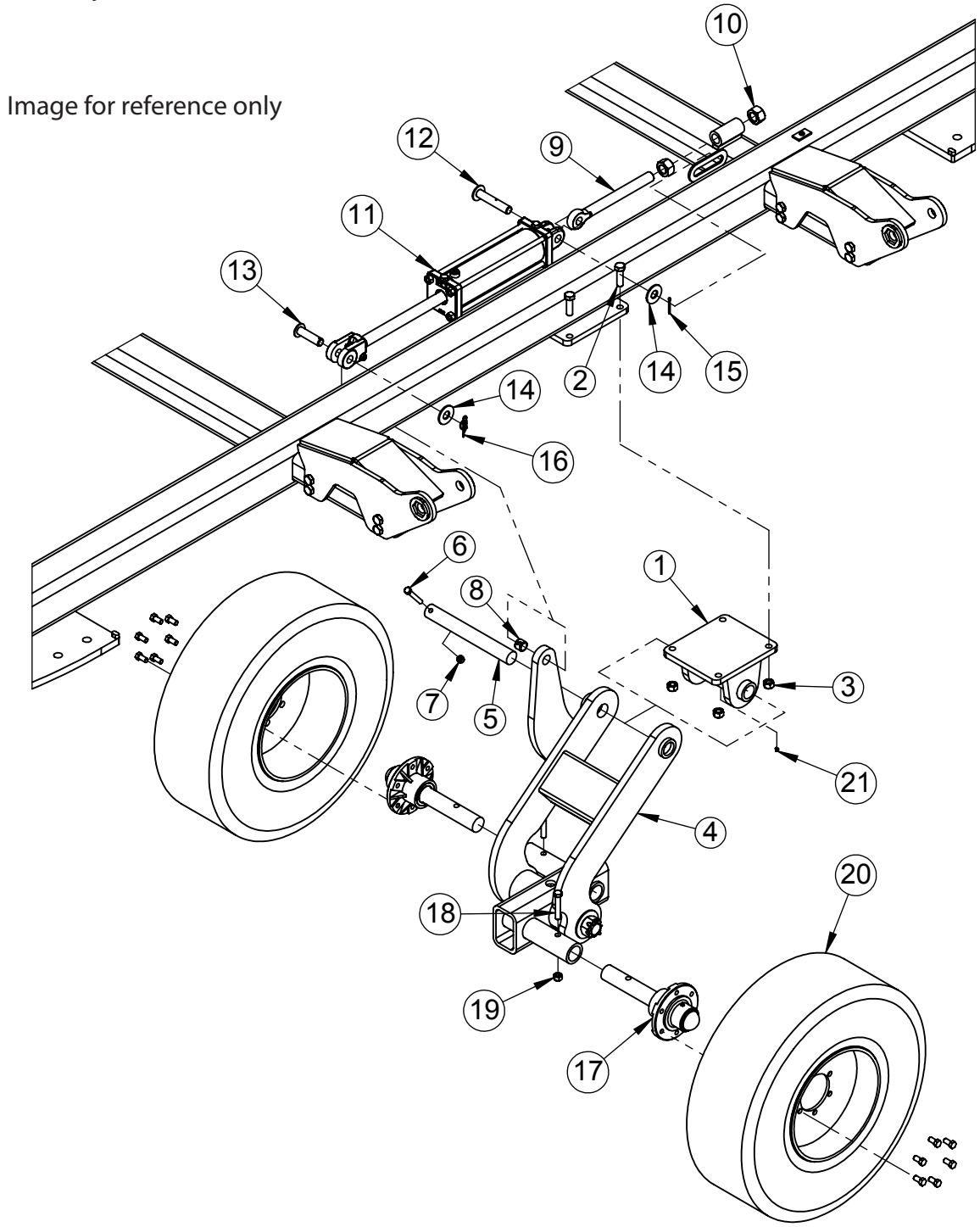

Fig.	Part no.	Qty	Description
1	604002043	2	Mount, Wheel Arm Pivot
2	600355046	8	Hex Bolt, 3/4" X 2-1/2" GR. 8
3	600366024	8	Nut, Toplock 3/4"
4	760013018	1	Wheelarm & Tandem Assembly, Left
	760013019	1	Wheelarm & Tandem Assembly, Right (not shown)
5	604003282	2	Pin, Wheelarm Pivot
6	600356137	2	Hex Bolt, 1/2" X 3-1/2" GR. 5
7	600366030	2	Nut, Toplock 1/2"
8	7600383216	4	Spring Bushing, 1" (pre-installed)
9	600373119	2	Eye Bolt, 1-1/4"-7 UNC
10	600365064	4	Nut, 1-1/4"-7 UNC
11	600474634	2	Cylinder 4” X 12” Tie-Rod Rephase
12	760015197	2	Pin, 1" Extended
13	600383136	2	Pin, 1" X 85MM
14	600381018	4	Flat Washer, 1"
15	600383058	2	Pin, Cotter 5/32 X 2"
16	600383117	2	Clip, Ring Cotter 1"
17	763011121	4	Spindle & Hub Assembly, 5000lb
18	600356116	4	Hex Bolt, 5/8" X 3-1/2" GR. 5
19	600366031	4	Nut, Toplock 5/8"
20	600473111	4	Wheel Assembly, llL-15 Galaxy, 6-Bolt
21	600471000	2	Grease Fitting

See pages 28 & 29 for part details

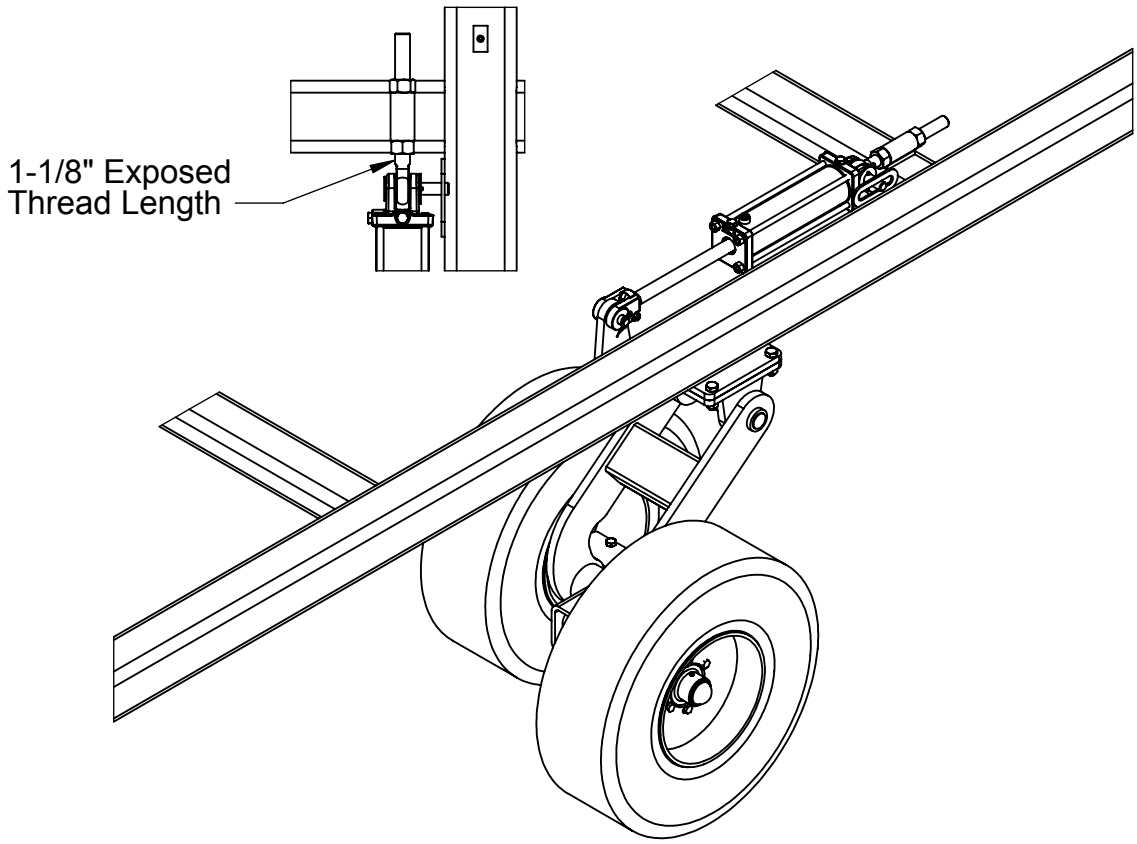

Outer Wing Gang & Scraper Assembly

Instructions:

-Hardware included in bags 760013045, 760013046, 760013047

-Attach bearing towers (2 & 3), c-springs (4), and scraper bracket (5) to gang assemblies using hardware listed on next page. Torque bolts (6) to 300 ft-lbs. NOTE: Rotate gang bearing so grease fitting is facing rearwards.

-Attach gang & c-sping assembly to gang tubes using clamp plates and bolts shown. See Appendix C (pg 60) for gang layout details.

-Install scraper tubes and scrapers after gangs have been mounted to machine. NOTE: Offset scrapers should be mounted as close as possible (without touching) to the concave side of the blades .

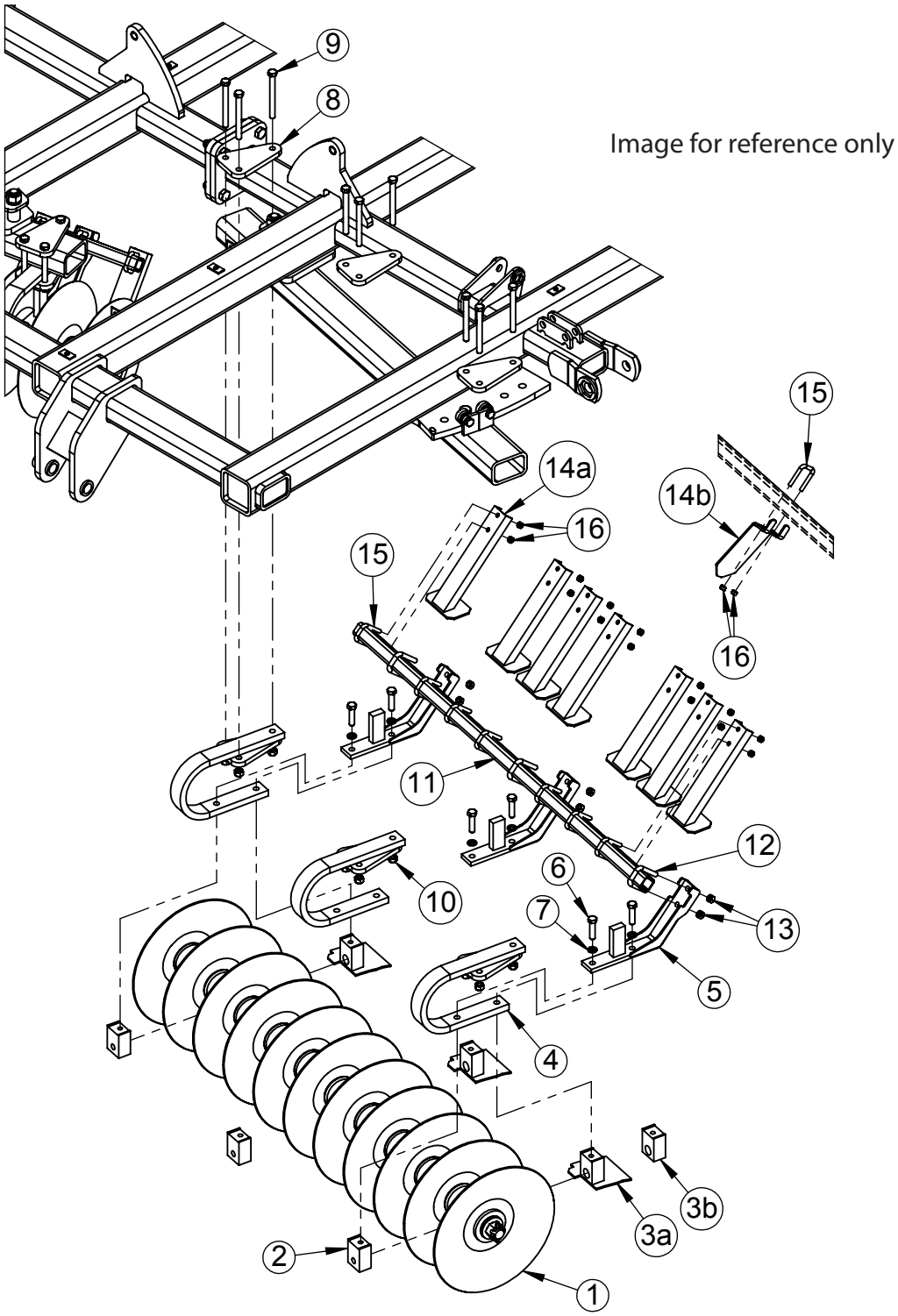

Fig.	Part no.	Qty	Description
1	760013029	2	Gang Assembly, 10-Blade Outer Wing Front - not shown
-	760013030	2	Gang Assembly, 12-Blade Outer Wing Rear - not shown
2	604002087	12	Tower, Gang Bearing
3a	760012000	6	Tower, Gang Bearing Scraper LH (Included in HD Scraper Option)
-	760012001	6	Tower, Gang Bearing Scraper RH (Included in HD Scraper Option) - not shown
3b	604002087	12	Tower, Gang Bearing (Included in Offset Scraper Option)
4	604002040	12	C-Spring
5	760012002	12	Scraper Bracket
6	600355001	24	Hex Bolt, 3/4" X 3" GR. 8
7	600382055	24	Lock Washer, 3/4"
8	604002067	24	Plate, Gang Mount
9	600355067	36	Hex Bolt, 3/4" X 7-1/2" GR. 8
10	600366024	36	Nut, Toplock 3/4"
11	604002190	4	Scraper Tube, 12-Blade (75")
12	600373112	12	U-Bolt, 5/8" X 2" X 3-1/2"
13	600366031	24	Nut, Toplock 5/8"
14a	760012019	36	HD Scraper Wdmt (Included in HD Scraper Option)
14b	760015198	36	Offset Scraper (Included in Offset Scraper Option)
15	600373061	36	U-Bolt, 1/2" X 2" X 3-1/4"
16	600366030	72	Nut, Toplock 1/2"

See pages 20 & 21 for gang details

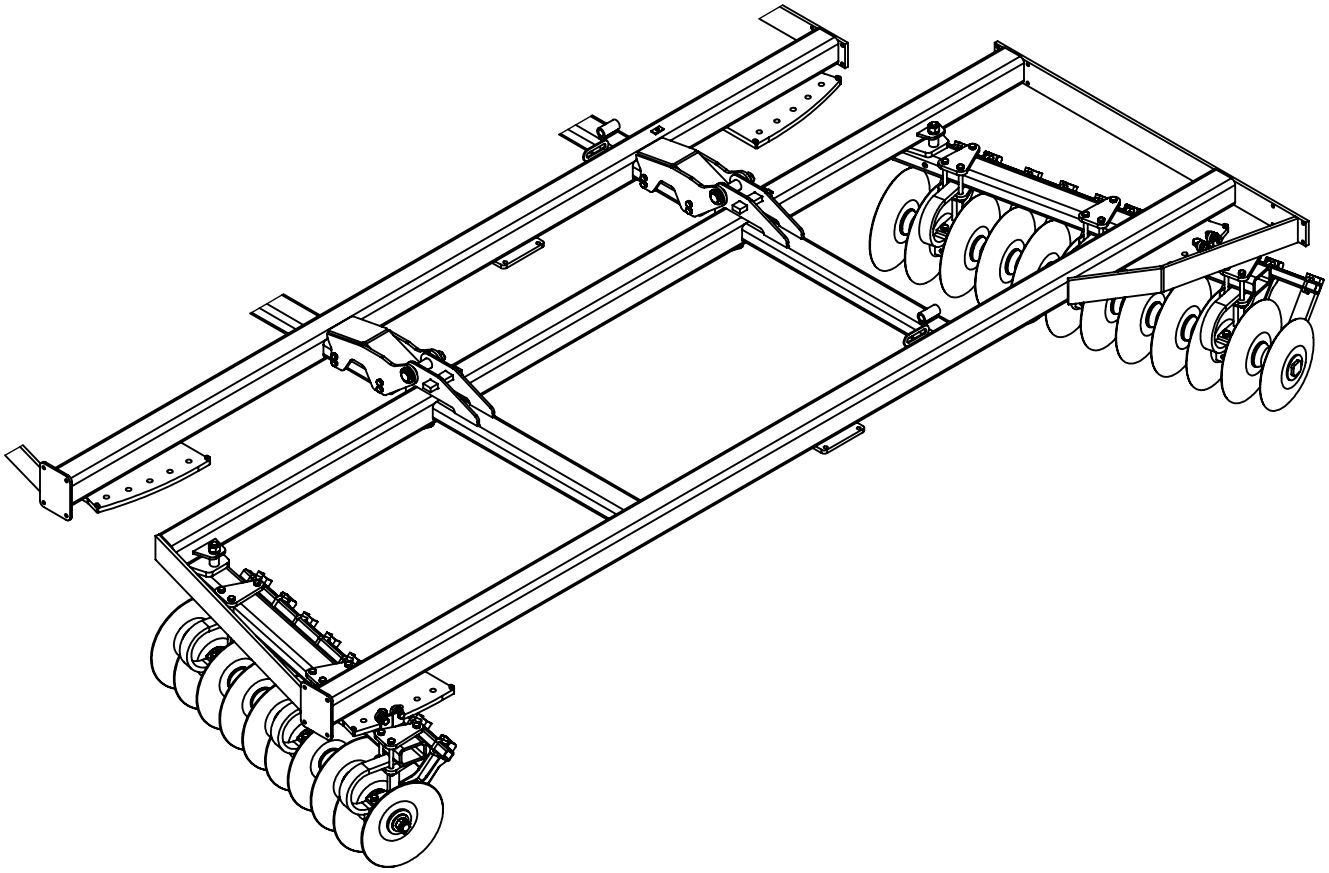

Harrow Arm & Roller Assembly

Instructions:
-Hardware included in bag 760013049
-Attach harrow arms and rollers to frame as shown using parts listed on next page.
-Orient rollers according to desired performance: lifting or firming the soil. See diagram below
-See Appedix D (pg 61) for roller layout.

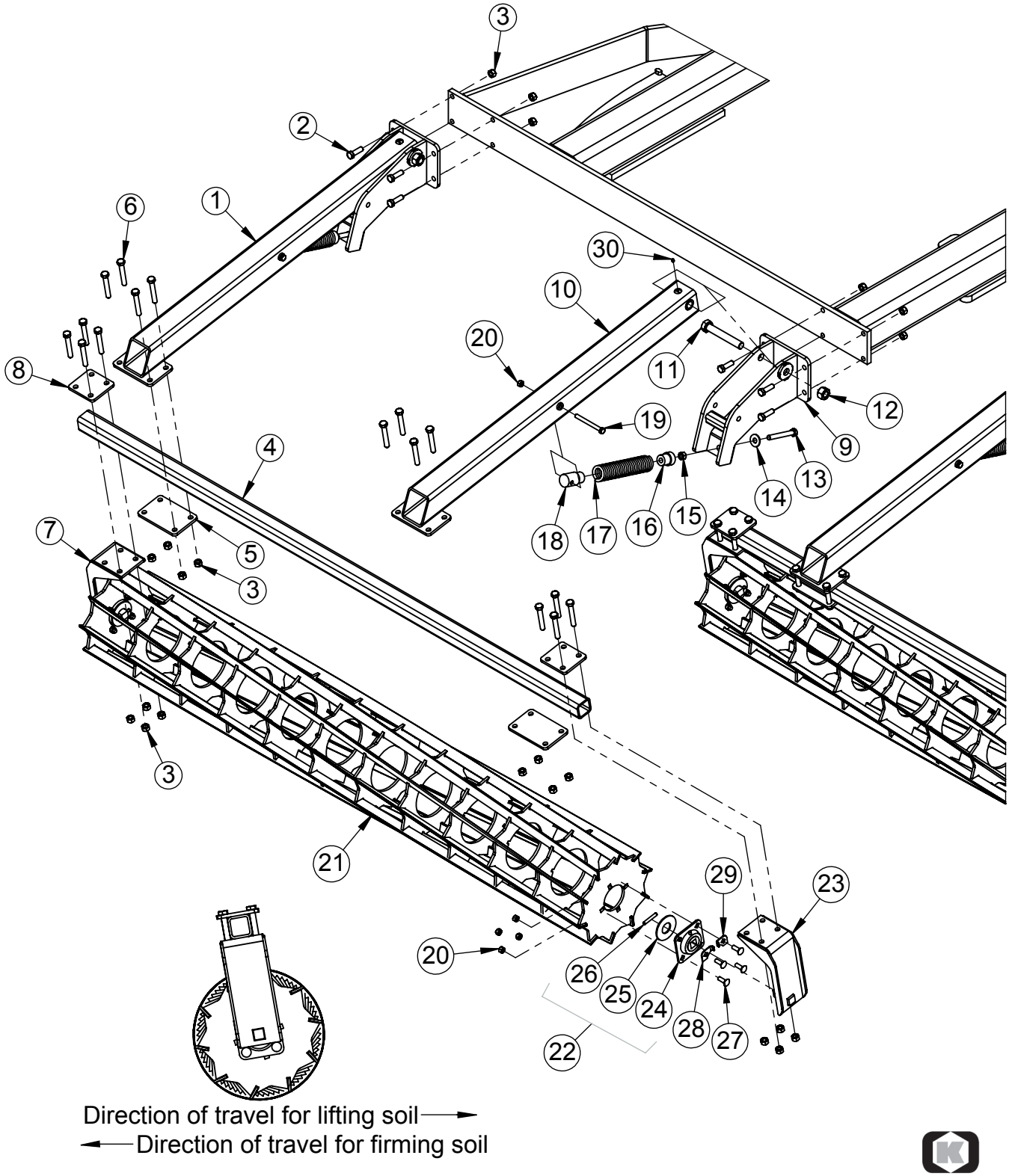

Fig.	Part no.	Qty	Description
1	760053021	10	Harrow Arm Assembly
2	600355028	40	Hex Bolt, 5/8” X 2” GR. 8
3	600366031	120	Nut, Toplock 5/8"
4	603151214	4	Tube, Roller Frame - 2500 (Wing Frames)
	603151215	1	Tube, Roller Frame - 3400 (Center Frame)
5	760051014	10	Plate, Harrow Arm Roller Mount
6	600355052	80	Hex Bolt, 5/8" X 4" GR. 8
7	603151266	4	Roller Assembly - 2500 (Wing Frames)
	603151267	1	Roller Assembly - 3400 (Center Frame)
8	603151217	10	Plate, Bearing Arm Clamp
9	760052006	1*	Harrow Bracket Wdmt
10	760052005	1*	Harrow Arm Wdmt
11	600355054	1*	Bolt, 1" X 6 1/2" GR. 8
12	600366032	1*	Nut, Toplock 1"
13	600373072	1*	Hex Bolt, 5/8” X 5” GR. 5 Full Thread
14	600381020	1*	Flatwasher, 5/8”
15	600365014	1*	Standard Nut, 5/8”
16	601000511	1*	Insert, C-Shank Spring - Top
17	601000510	1*	Spring, C-Shank
18	601000512	1*	Insert, C-Shank Spring - Bottom
19	7600355105	1*	Hex Bolt, 1/2" X 5" GR. 8
20	600366030	5*	Nut, Toplock 1/2”
21	603151208	1*	Roller Weldment, 2500 (Wing Frames)
	603151209	1*	Roller Weldment, 3400 (Center Frame)
22	603151265	2*	Bearing Arm Assembly (Includes Items 23, 24, 25, 26)
23	603151216	1*	Bearing Arm
24	600451006	1*	Roller Bearing - FD209
25	600381054	1*	Flat Washer, 1 1/2" SAE
26	600383013	1*	Pin, Roll 3/8" x 2 1/2"
27	600361036	4*	Carriage Bolt, 1/2” x 1 1/2"
28	603151240	1*	Grease Fitting Shield - Left
29	603151241	1*	Grease Fitting Shield - Right
30	600471000	1*	Grease Fitting
		*	Quantities listed for one harrow arm assembly and one bearing arm assembly

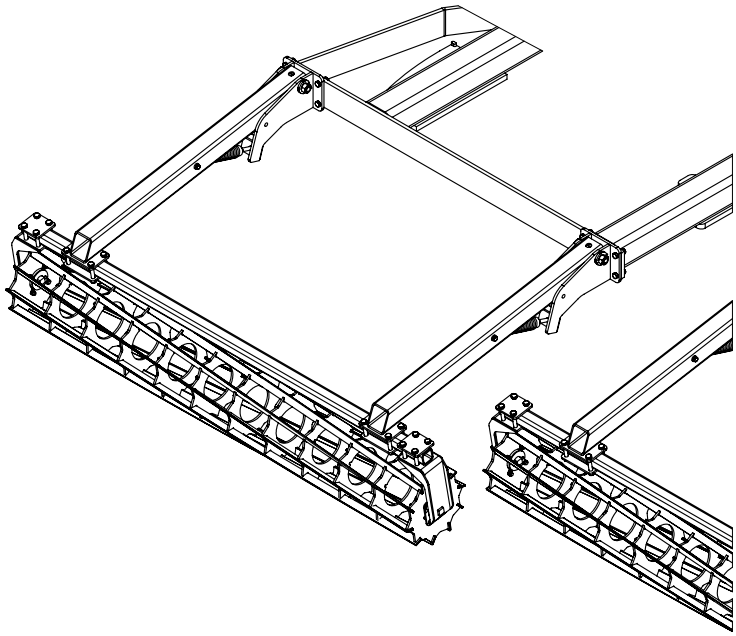

Hydraulic Tree Assembly

Instructions:
-Hardware included in bag 760013034. Fittings included in hydraulic kit 760013033
-Attach hydraulic hose tree to frame as shown using hardware listed on next page.
-Locate tree 5" behind cross tube.
-It is recommended to install bulkhead fittings (included in hydraulic kit) one at a time from bottom to top while routing hydraulic hoses.

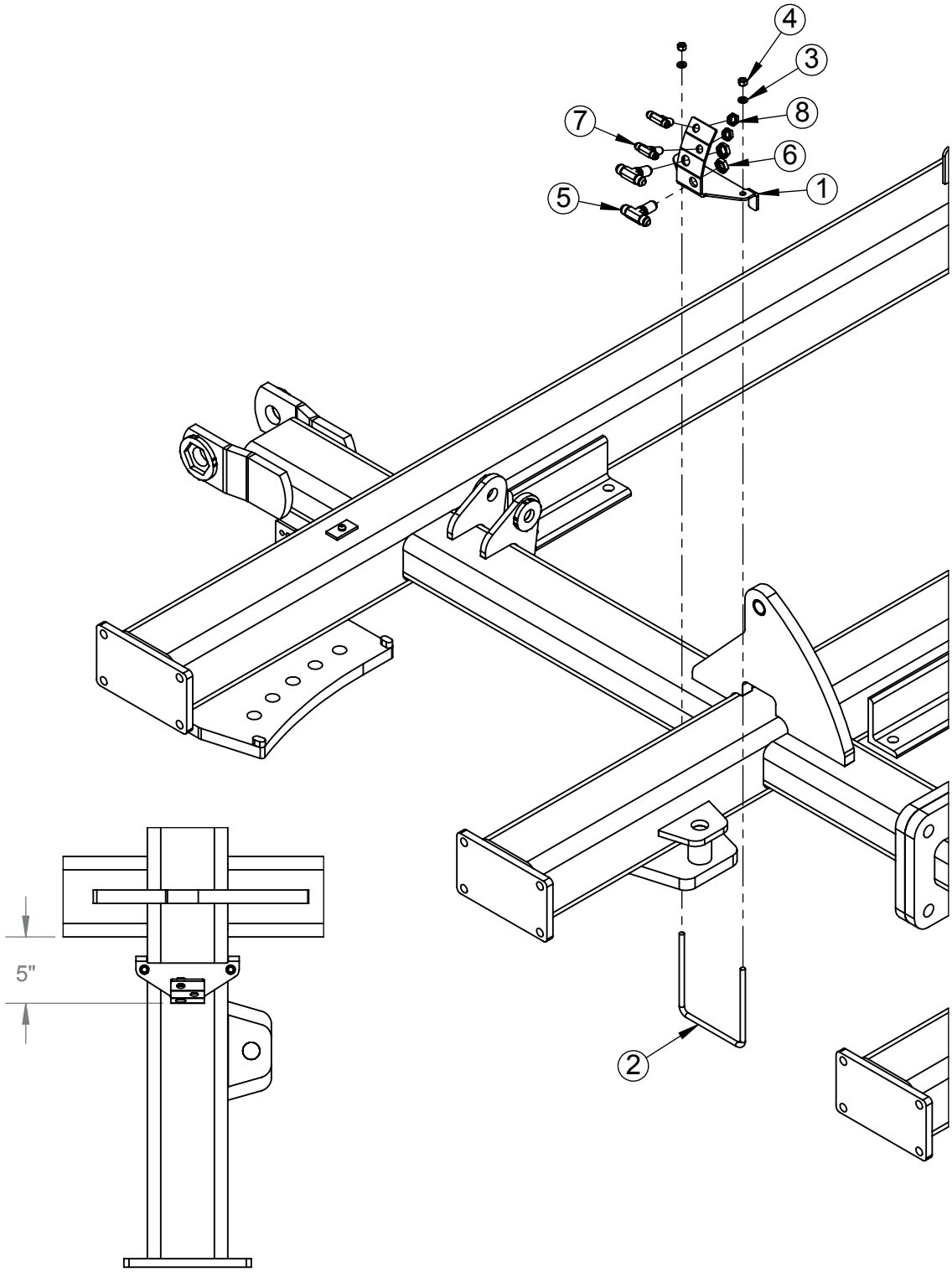

Fig.	Part no.	Qty	Description
1	760015200	1	Hyd Hose Tree
2	76101374	1	U-Bolt, 3/8" X 6" X 7"
3	600382051	2	Lock Washer, 3/8"
4	600365008	2	Standard Nut, 3/8"
5	7600470475	2	#8 MJIC Bulkhead Tee (Includes Nut)
6	7600470477	2	#8 JIC Bulkhead Nut (Includes Nut)
7	7600470474	-	#6 MJIC Bulkhead Tee
8	7600470476	-	#6 JIC Bulkhead Nut

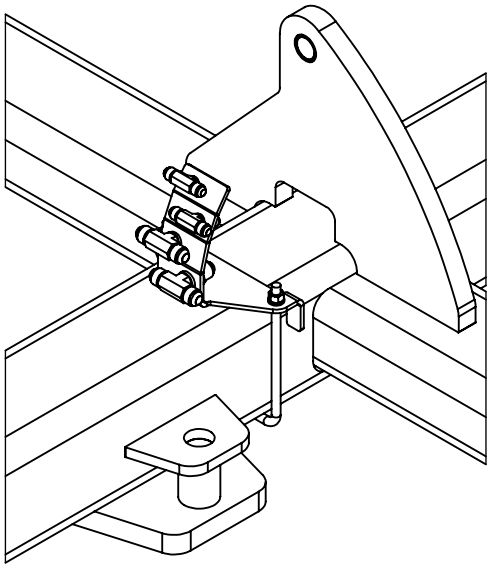

Instructions:
-Use Hydraulic Hose Kit 760013033. Hardware included in bag 760013034
-Connect hydraulic fittings and hoses as shown in this schematic. Refer to Appendix A (pg 57) for detailed routing information.
-Secure hoses with hold downs provided.

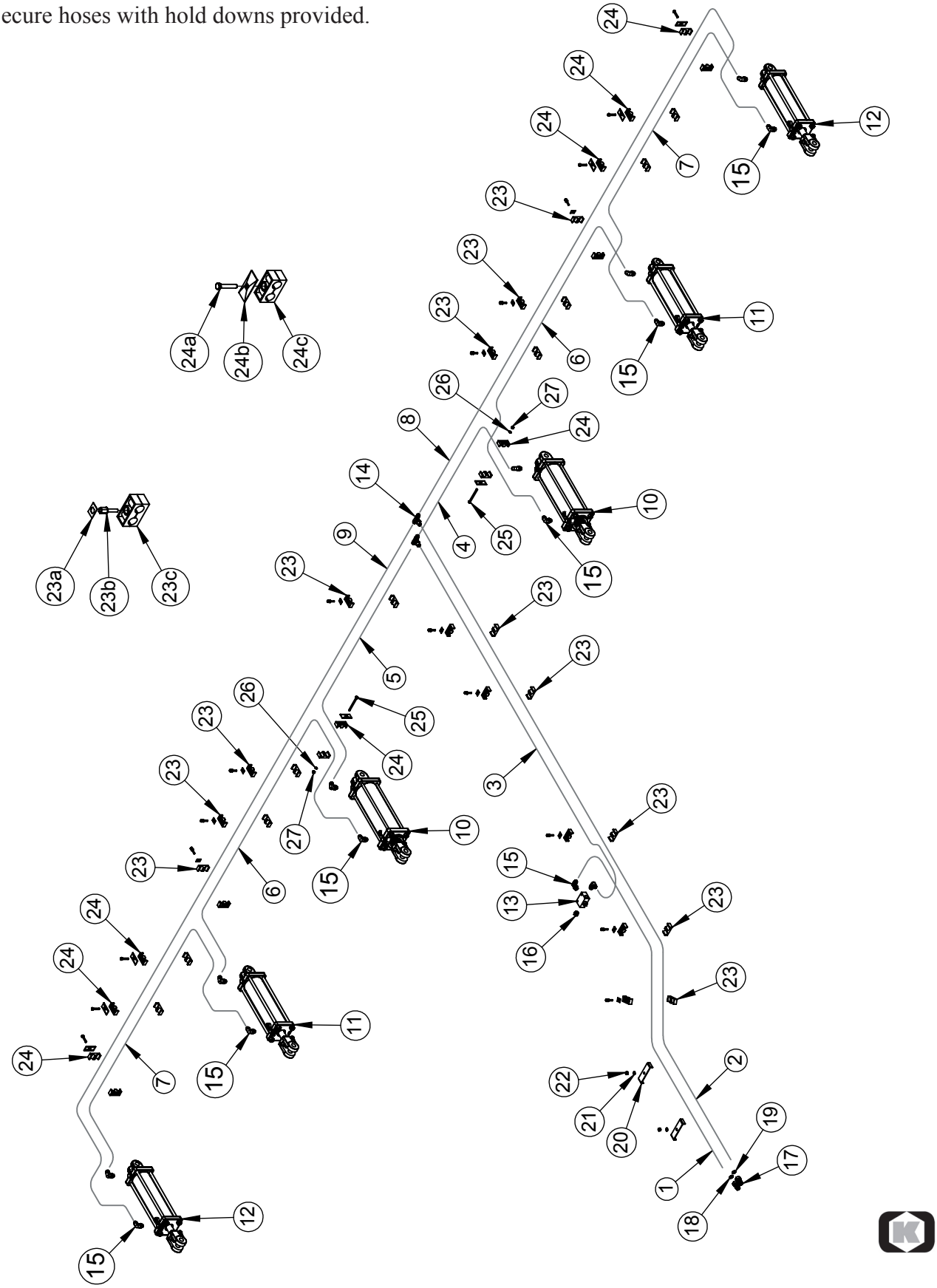

Fig.	Part no.	Qty	Description
1	7600470564	1	Hyd Hose, 1/2"-8FJX-8MB-210"
2	7600470565	1	Hyd Hose, 1/2"-8FJX-8MB-338"
3	7600470566	1	Hyd Hose, 1/2"-8FJX-8FJX-154"
4	7600470567	1	Hyd Hose, 1/2"-8FJX-8FJX-64"
5	7600470568	1	Hyd Hose, 1/2"-8FJX-8FJX-108"
6	7600470569	2	Hyd Hose, 1/2"-8FJX-8FJX-148"
7	7600470570	2	Hyd Hose, 1/2"-8FJX-8FJX-130"
8	7600470571	1	Hyd Hose, 1/2"-8FJX-8FJX-230"
9	7600470572	1	Hyd Hose, 1/2"-8FJX-8FJX-272"
10	600474633	2	Cylinder 4-1/2" x 12" Rephase - Prince
11	600474634	2	Cylinder 4" x 12" Rephase - Prince
12	600474635	2	Cylinder 3-3/4" x 12" Rephase - Prince
13	7600470491	1	Valve for Single Pt. Hyd.
14	7600470475	2	#8 MJIC Bulkhead Tee
15	76201002	14	#8 MJIC x #8 Male ORB 90°
16	600470338	1	#8 ORB Plug
17	7600470580	2	Coupler, 1/2" Pioneer Male Tip, 3/4"-16 ORB (Poppet Style)
18	7600470519	1	Band, Red Plastic - 3/4"
19	7600470520	1	Band, Blue Plastic - 3/4"
20	76400207	2	5 Hose Holdown
21	600382051	2	Lock Washer, 3/8"
22	600365008	2	Standard Nut, 3/8"
23	7600470562	12	Stacking Module, 1/2" Hose Holder (Includes Items 23a,b,c)
23a	7600470558	-	Safety Plate
23b	7600470557	-	Stacker Bolt w/washer
23c	7600470550	-	Clamp Pair, 1/2"
24	7600470556	8	Hose Holder Module, 1/2"
24a	7600356166	-	Hex Bolt, 5/16"-18 X 1-3/4" GR. 2
24b	7600470552	-	Top Plate
24c	7600470550	-	Clamp Pair, 1/2"
25	600356034	2	Hex Bolt, 5/16" X 4" GR. 5
26	600382050	2	Lock Washer, 5/16"
27	600365007	2	Nut, Standard 5/16"

Instructions:
-Use Hydraulic Hose Kit 760013033. Hardware included in bag 760013034
-Connect hydraulic fittings and hoses as shown in this schematic. Refer to Appendix A (pg 57) for detailed routing information.
-Secure hoses with hold downs provided.

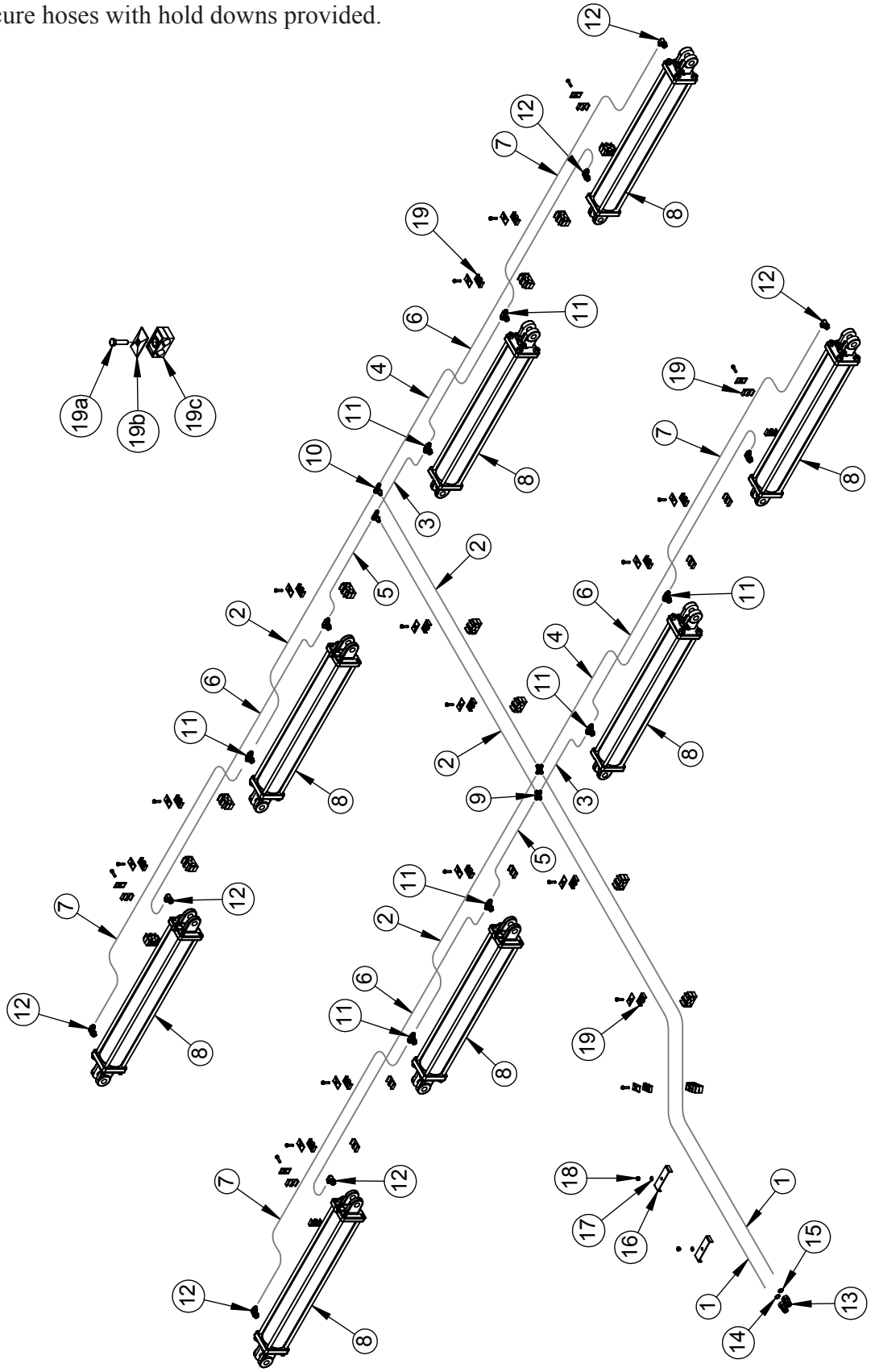

Fig.	Part no.	Qty	Description
1	7600470573	2	Hyd Hose, 3/8"-6FJX-8MB-248"
2	7600470574	4	Hyd Hose, 3/8"-6FJX-6FJX-82"
3	7600470575	2	Hyd Hose, 3/8"-6FJX-6FJX-24"
4	7600470576	2	Hyd Hose, 3/8"-6FJX-6FJX-42"
5	7600470577	2	Hyd Hose, 3/8"-6FJX-6FJX-64"
6	7600470578	4	Hyd Hose, 3/8"-6FJX-6FJX-114"
7	7600470579	4	Hyd Hose, 3/8"-6FJX-6FJX-132"
8	7600474689	4	Cylinder 4" x 30" Prince
9	600470125	2	#6 MJIC Cross
10	7600470474	2	#6 MJIC Bulkhead Tee
11	7600470466	8	#6 MJIC X #6 MJIC X #8 M ORB Branch Tee
12	76201001	8	#6 MJIC x #8 Male ORB 90°
13	7600470580	2	Coupler, 1/2" Pioneer Male Tip, 3/4"-16 ORB (Poppet Style)
14	7600470521	1	Band, Yellow Plastic - 3/4"
15	7600470522	1	Band, Green Plastic - 3/4"
16	76400207	2	5 Hose Holdown
17	600382051	2	Lock Washer, 3/8"
18	600365008	2	Standard Nut, 3/8"
19	7600470555	19	Hose Holder Module, 3/8"
19a	7600356167	-	Hex Bolt, 5/16"-18 X 1-1/4" GR. 2
19b	7600470553	-	Top Plate
19c	7600470549	-	Clamp Pair, 3/8"

Lift Cylinder

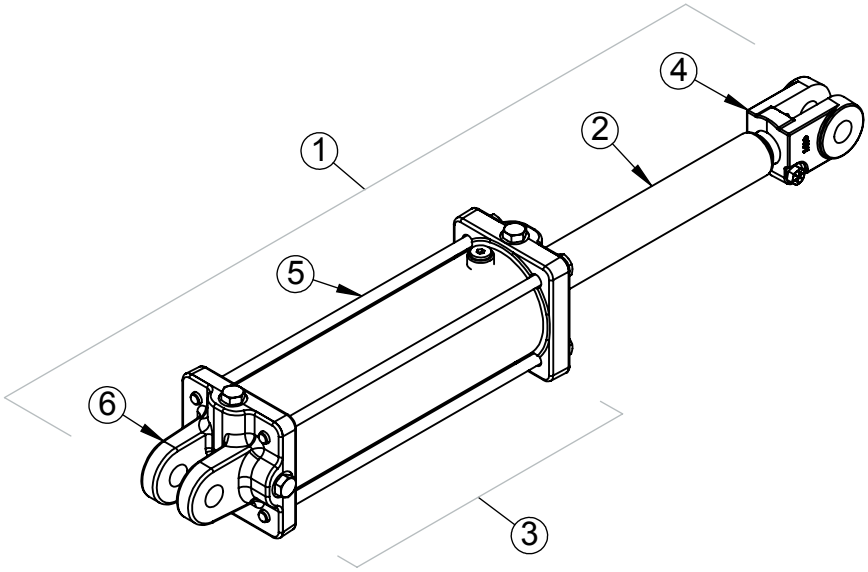

Fold Cylinder

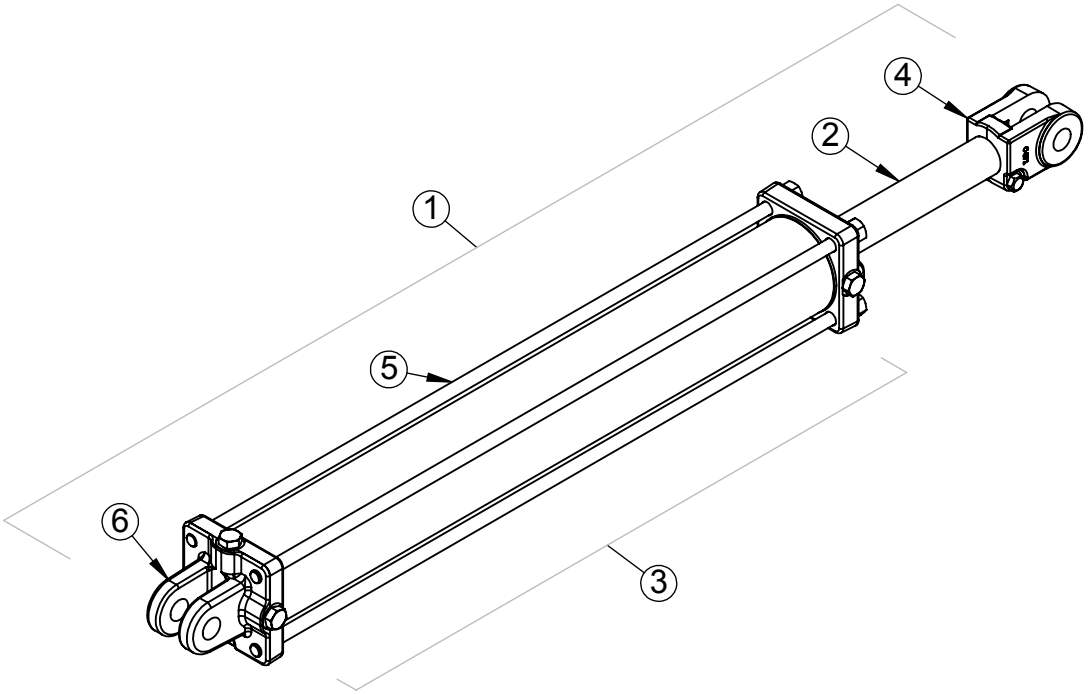

Fig.	Part no.	Qty	Description
1	600474633	1	Cylinder 4-1/2" x 12" Rephase - Prince (PMS-AM-2546C008)
2	7600474694	1	Rod (011100737)
3	600474637	1	Seal Repair Kit (PMCK-AM-2546)
4	600474614	1	Clevis (100000326)
5	7600474695	4	Tie Rod (170301176)
6	600474657	1	Endcap (142000004)
1	600474634	1	Cylinder 4" x 12" Rephase - Prince (PMS-AM-2552AC011)
2	7600474696	1	Rod (010700698)
3	600474638	1	Seal Repair Kit (PMCK-AM-2552A)
4	600474606	1	Clevis (100000577)
5	7600474697	4	Tie Rod (170301173)
6	600474619	1	Endcap (1419005SF)
1	600474635	1	Cylinder 3-3/4" x 12" Rephase - Prince (PMS-AM-2558AC011)
2	7600474696	1	Rod (010700698)
3	600474639	1	Seal Repair Kit (PMCK-AM-2558A)
4	600474606	1	Clevis (100000577)
5	7600474697	4	Tie Rod (170301173)
6	600474621	1	Endcap (1418005SF)

1	7600474689	1	Cylinder 4" x 30" Prince (B400300BBAGA07A)
2	7600474698	1	Rod (011035438A)
3	600474613	1	Seal Repair Kit (PMCK-B400000)
4	600474614	1	Clevis (100000326)
5	7600474699	4	Tie Rod (170301354)
6	600474619	1	Endcap (1419005SF

Light Kit Assembly

Instructions:
-Connect electrical wiring from light kit as shown in the schematic below. Refer to Appendix B (pg 59) for detailed routing information.
-Secure wiring with cable ties.

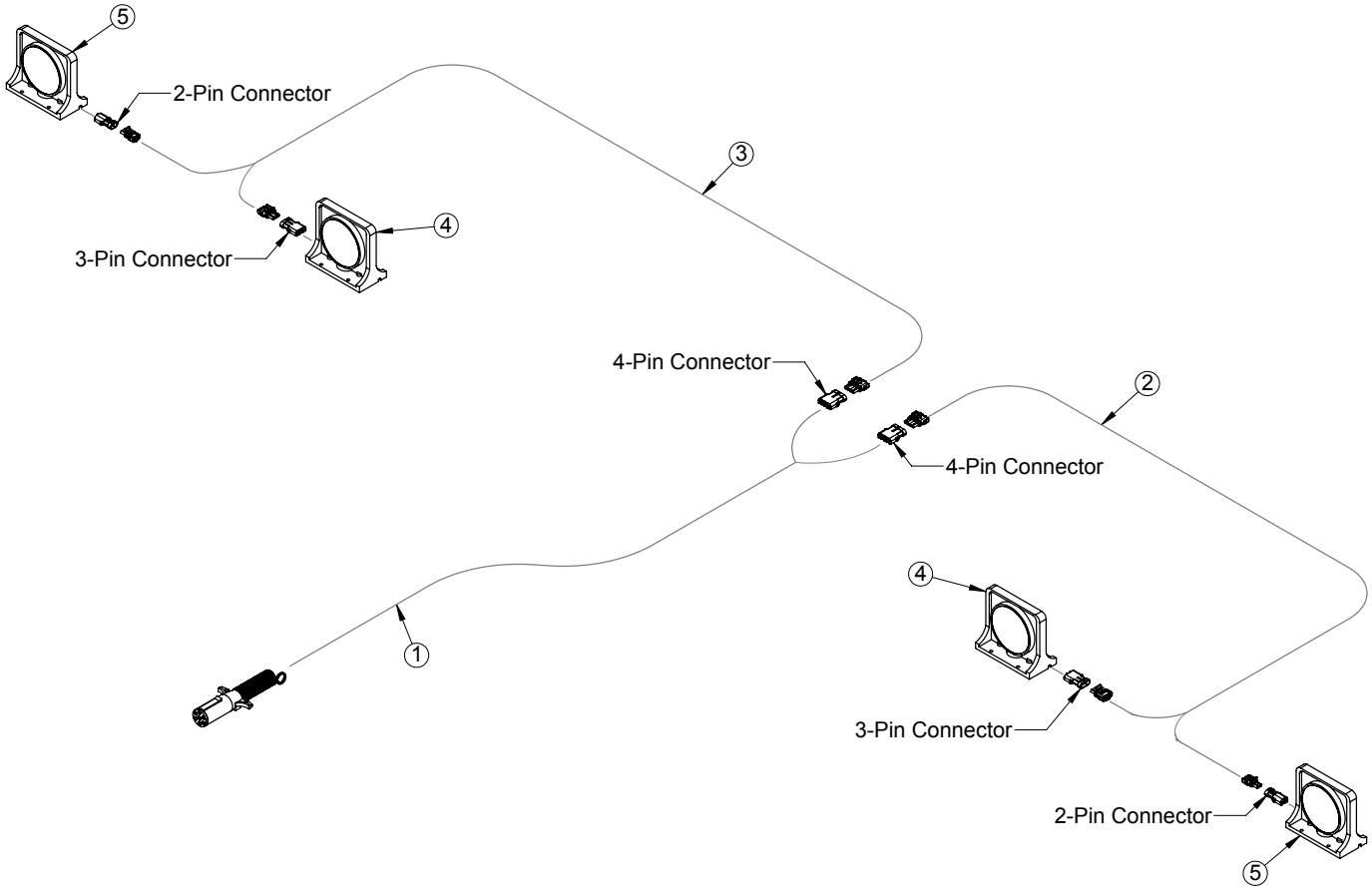

Fig.	Part no.	Qty	Description
-	760033006	1	Light Kit
1	760031240	1	Harness, 30' Lead w/7-Pole Ag Plug
2	760031241	1	Harness, 11' - Y, LH
3	760031242	1	Harness, 15' - Y, RH
4	760031243	1	Tail Light, Red
5	760031244	1	Warning Light, Amber

Swivel Gauge Wheel Assembly (Optional)

Instructions:
-Hardware included in bag 760033068
-Assemble gauge wheels to outer front corners of intermediate and outer wing frames as shown, using the parts listed on next page.
-RH gauge wheels will be installed on left side of machine; LH gauge wheels will be installed on right side of machine. (Wheels need to be on the inside of the arms to swivel correctly)

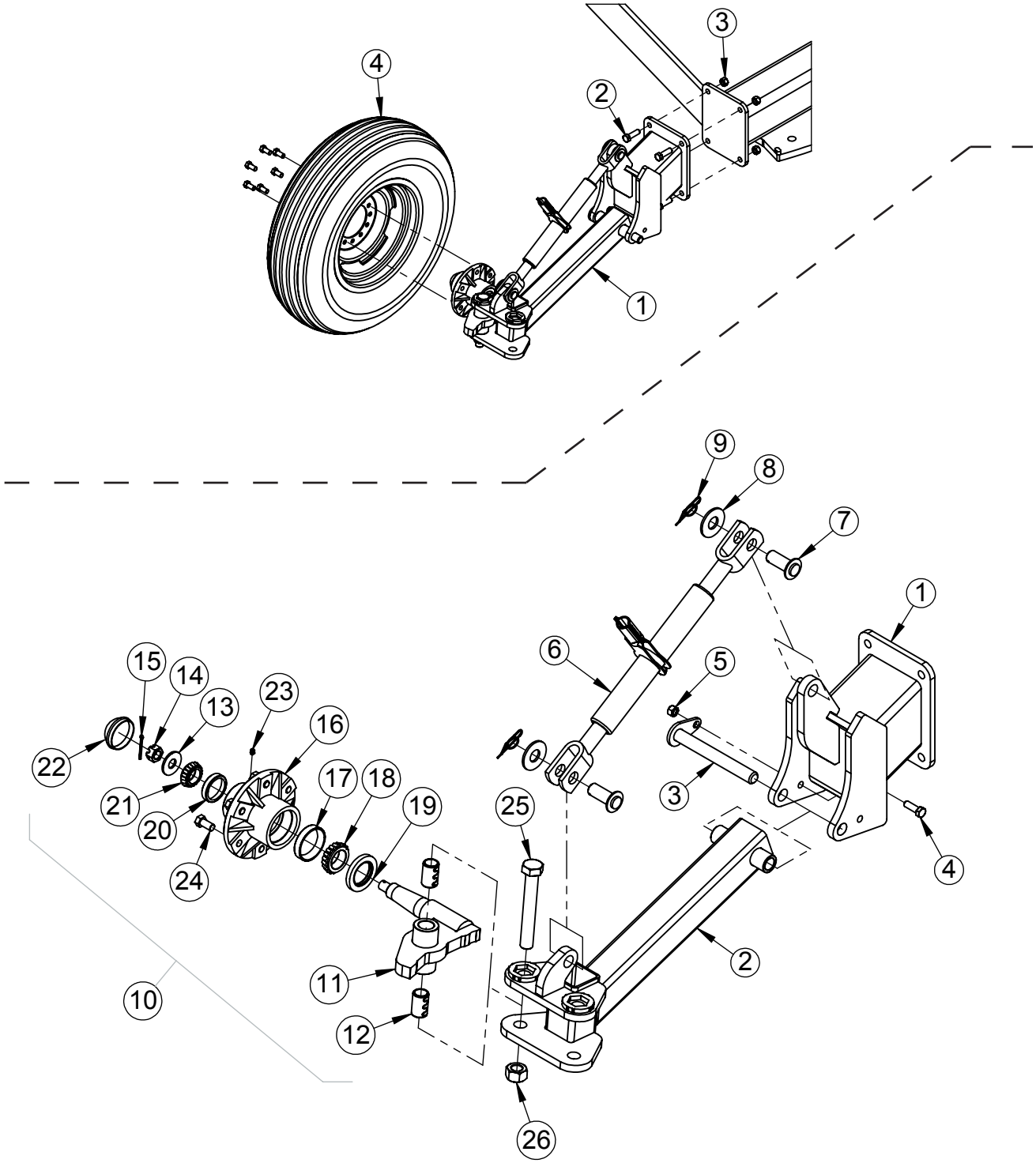

Fig.	Part no.	Qty	Description
1	760033066	2	Swivel Gauge Wheel Assembly, RH
	760033067	2	Swivel Gauge Wheel Assembly, LH (not shown)
2	600356010	4*	Hex Bolt, 5/8" X 2" GR. 5
3	600366031	4*	Nut, Toplock 5/8"
4	76301259	1*	Wheel Assembly, 9.5L X 15 8-PLY

PART DETAILS

1	760036096	1	Gauge Wheel Mount Bracket
2	760036092	1	Gauge Wheel Arm
3	7600383215	1	Gauge Wheel Pivot Pin 1"
4	600356109	1	Bolt, 1/2" X 1-1/2" GR.5
5	600366030	1	Nut, Toplock 1/2"
6	600600267	1	Turnbuckle - SL154
7	600383108	2	Pin, 1" - 55MM
8	600381018	2	Flat Washer, 1"
9	600383117	2	Ring Cotter Clip 1"
10	760033062	1	Hub & Spindle Assembly, Swivel (Includes Items
11	760036094	1	Spindle Assembly, Swivel (Includes Items 13, 14, 15)
12	7600383217	2	Connex Bushing, 2" LG
13	600381009	1	Flat Washer, 3/4"
14	76301153	1	Slotted Nut, 3/4" UNF
15	76101249	1	Cotter Pin, 5/32" x 1-3/4"
16	763011269	1	6 Bolt Hub - 6" Bolt Circle G35-6 (Includes Items 17, 20, 23, 24)
-	763011609	1	G35-6 Hub Assembly Complete (Includes Items 16-24)
17	76301135	1	Bearing Cup - LM501310
18	76301129	1	Bearing Cone - LM501349
19	7600473135	1	Seal, 2” W/Spring & Alternate Lip
20	76301134	1	Bearing Cup - LM67010
21	76301132	1	Bearing Cone - LM67048
22	76301143	1	Dust Cap
23	600471000	1	GF-641 Grease Fitting
24	76301151	6	Lug Bolt, 9/16"-18 x 1-1/8"
25	600355025	1	Hex Bolt, 1" X 7" GR. 8
26	600355032	1	Nut, Toplock 1"

Decal Placement

Instructions:

-Attach decals to clean surfaces as shown below.

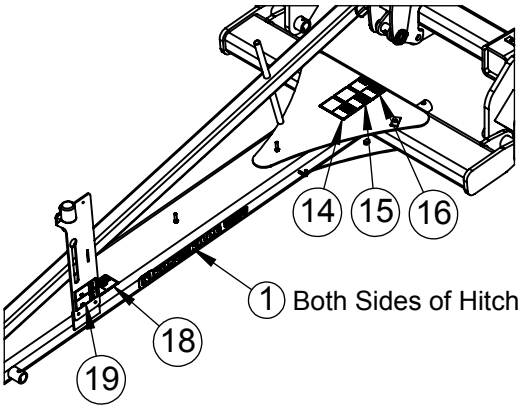

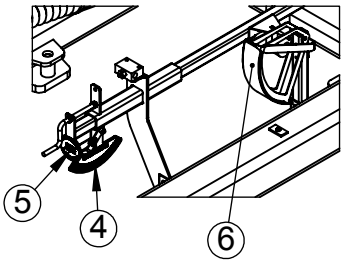

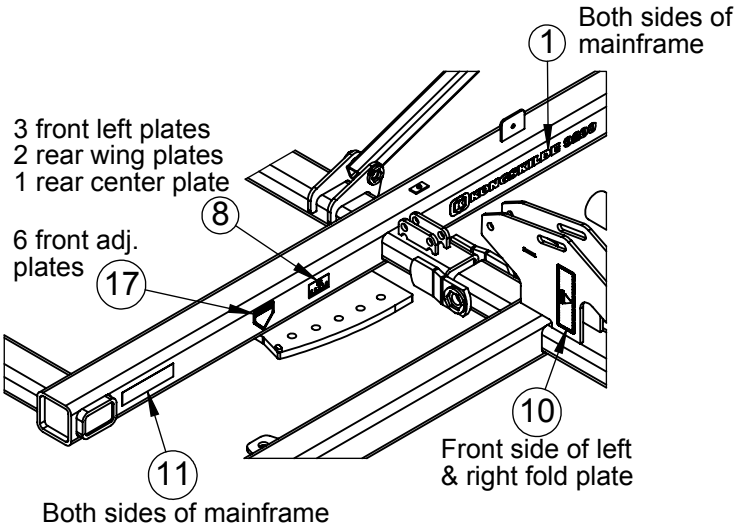

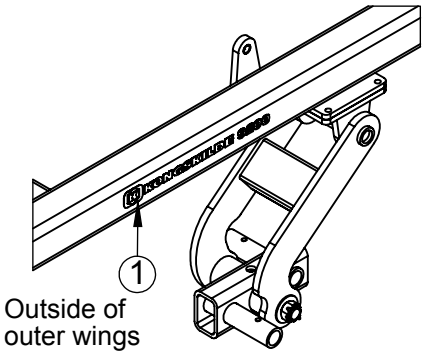

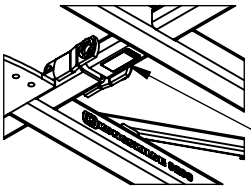

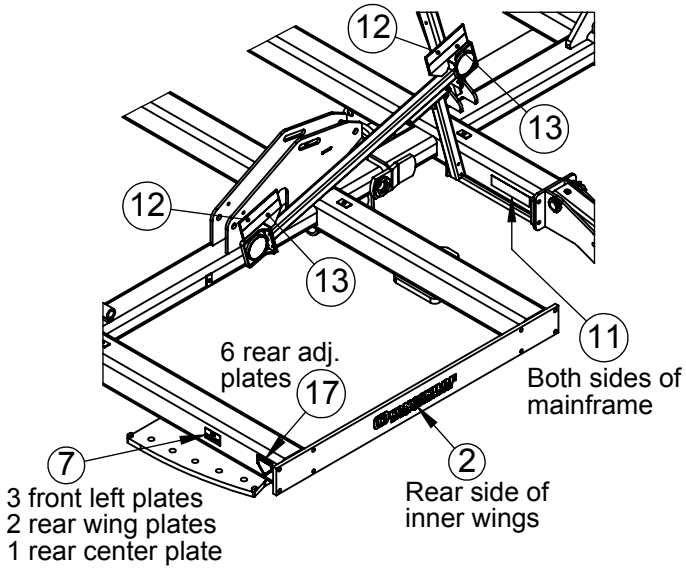

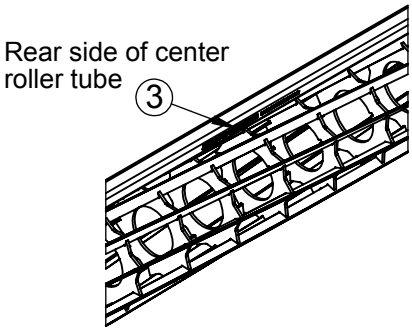

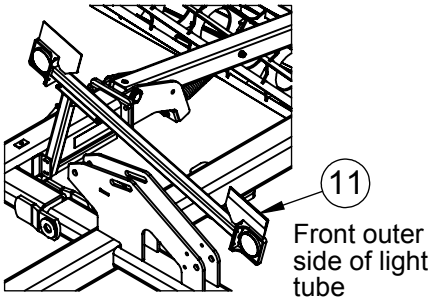

Fig.	Part no.	Qty	Description
1	7600475286	6	Decal, Kongskilde 9200
2	7600475282	2	Decal, Kongskilde
3	7600475265	2	Kongskilde Website Decal
4	7600475258	1	Decal, Depth Gauge
5	7600475259	1	Decal, Depth Adjust
6	7600475287	1	Decal, Depth Indicator
7	7600475263	6	Decal, LH Gang Angle
8	7600475264	6	Decal, RH Gang Angle
9	600475039	4	Decal, Wing Safety
10	600475176	2	Decal Wing Fold Lock
11	600475180	6	Yellow Reflective Strip
12	600475179	4	Red Reflective Strip
13	600475178	4	Red-Orange Fluorescent Strip
14	600475160	1	Tipping Hazard Decal
15	600475169	1	Electrocution Hazard Decal
16	600475170	1	Max Speed Decal
17	600475253	12	Decal, Sharp Blade
18	7600475276	1	Decal, Read Manual
19	7600475277	1	Decal, Hose Color Code

After assembly is complete, charge the wheel lift cylinders with a tractor or hydraulic unit, fully extending and retracting the cylinders several times. Hold the hydraulic lever open at the end of the stroke to purge the air from the system. Fully extend the lift cylinders and install the transport safety locks onto the center lift cylinders.

CAUTION: ALWAYS INSTALL THE TRANSPORT LOCK ONTO THE CENTER LIFT CYLINDERS WHEN THE IMPLEMENT IS PLACED IN THE RAISED POSITION FOR TRANSPORT, MAINTENANCE OR STORAGE. Secure with the pin and lock clip provided.

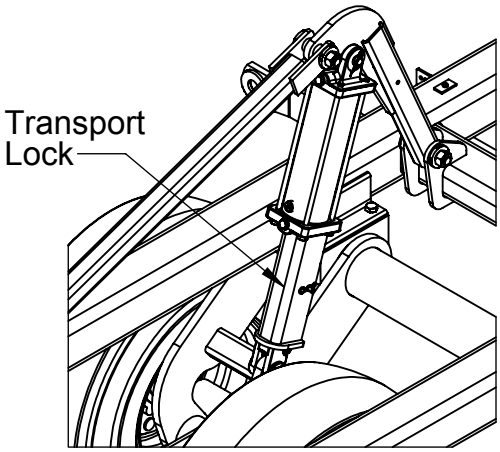

The wing fold cylinders must be charged with oil before attempting to fold the cultivator. Disconnect the cylinder rod clevis from the wings and block up the cylinder. Extend and retract the cylinders several times with a tractor or hydraulic unit, holding the lever at the end of the stroke to purge the air from the system. After fold cylinders are charged, re-connect them to the wings.

Slowly fold the wings to the transport position. Insert the wing lock safety pins.

CAUTION: ALWAYS INSTALL THE WING LOCK SAFETY PINS WHEN THE IMPLEMENT IS FOLDED FOR TRANSPORT, MAINTENANCE OR STORAGE.

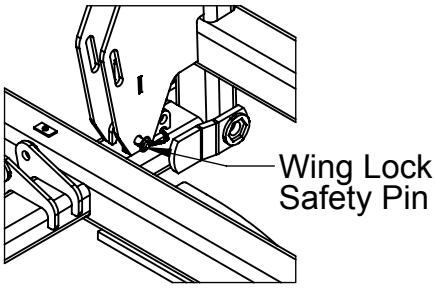

CAUTION: Never transport the implement on public road ways without installing the transport safety chain and SMV sign.

Refer to the Owners Manual for further safety information before attempting to operate or service the unit.

Final Inspection

When the machine is fully assembled, verify all nuts, bolts and other connections are secure. Be sure to read the Owners Manual before attempting to operate the unit. The Owners Manual provides important instructions and safety precautions that must be followed before attempting to hook up and move the unit after assembly.

Hydraulic Hose Routing Details

Route hoses along hitch

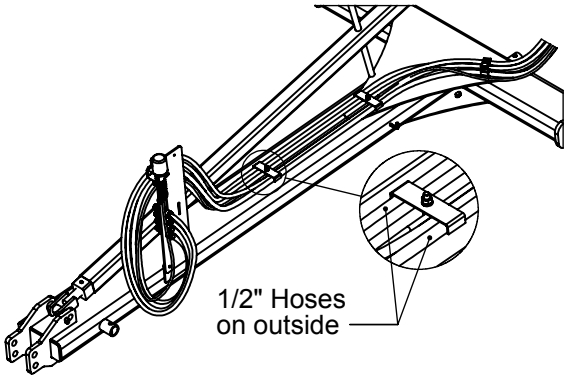

Route hoses to single point

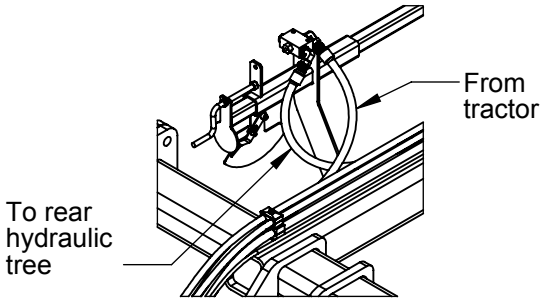

Route hoses from tree
to center lift cylinders

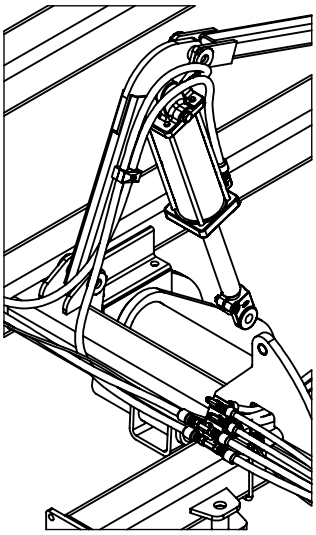

Locate cross fittings behind
front fold cylinder mount

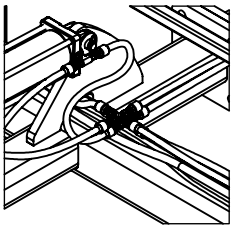

Route hoses along
mainframe to hydraulic tree.

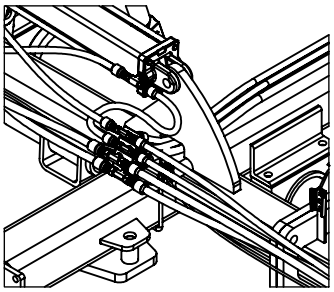

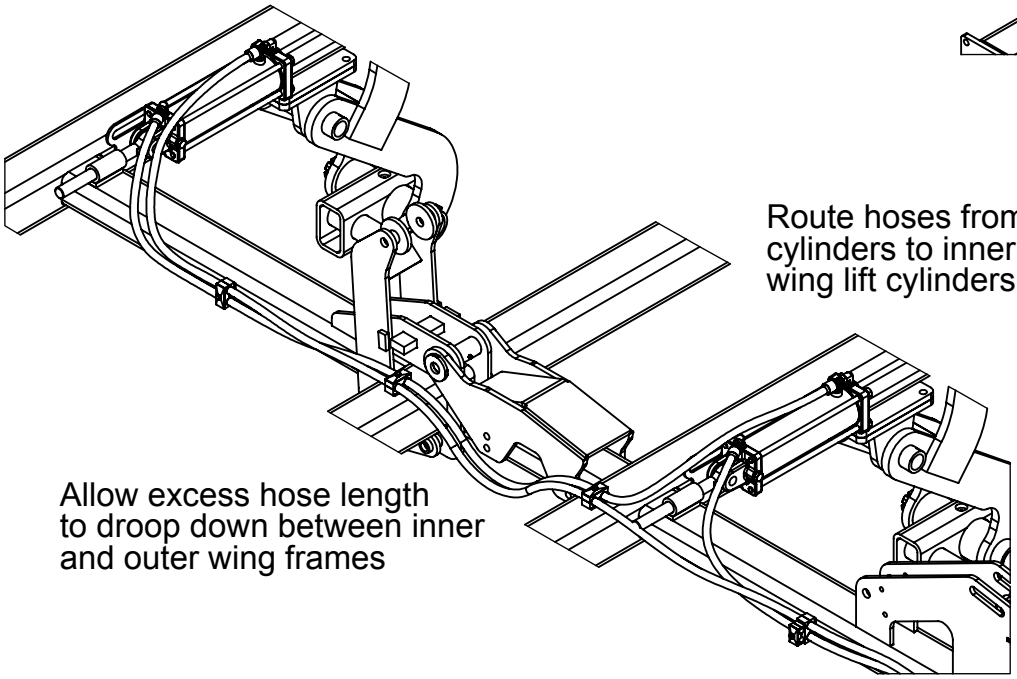

Route hoses from center lift
cylinders to inner and outer
wing lift cylinders

Allow excess hose length
to droop down between inner
and outer wing frames

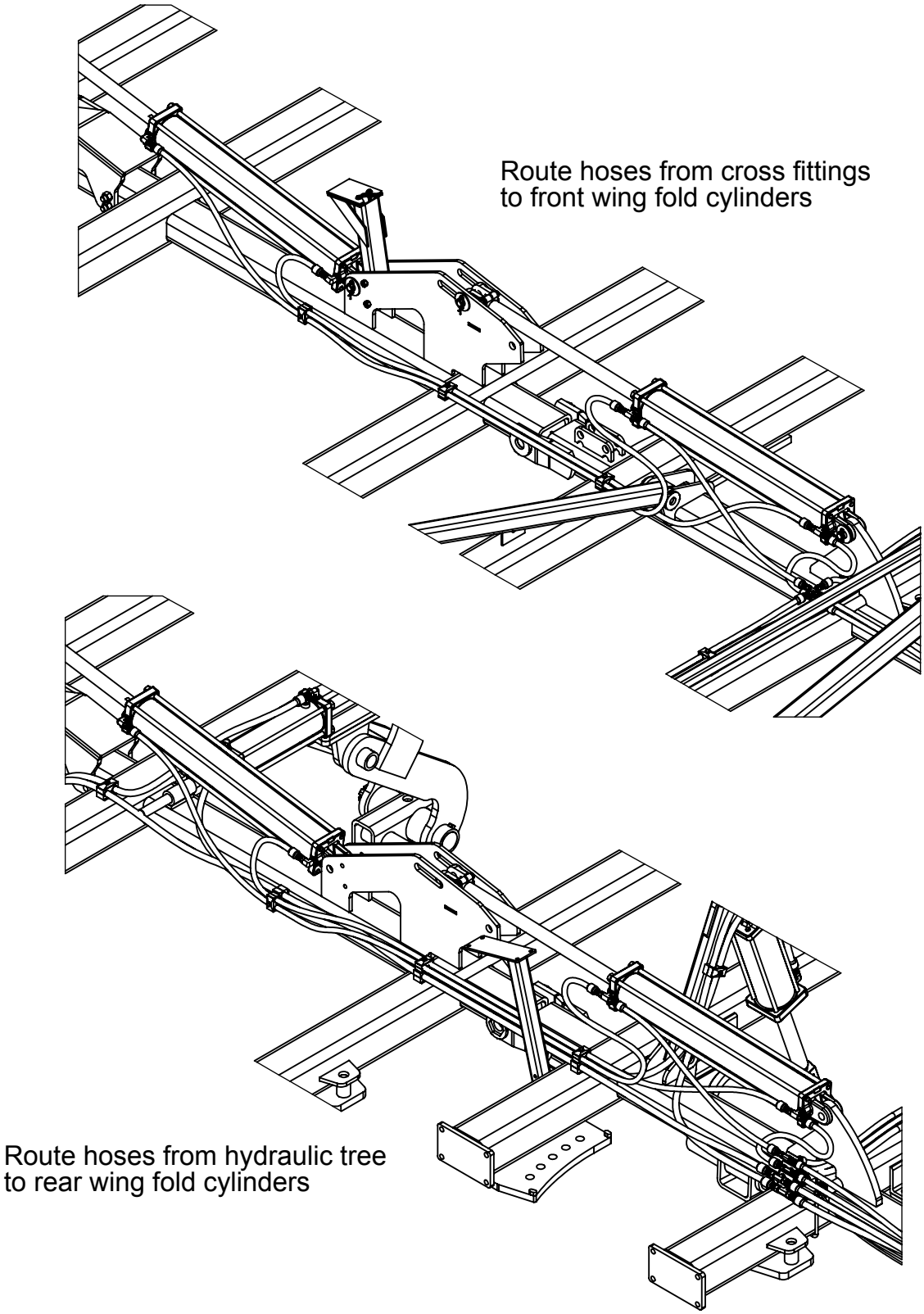
Route hoses from cross fittings
to front wing fold cylinders
Route hoses from hydraulic tree
to rear wing fold cylinders

Safety Lighting Wire Routing Details

Route light wiring from hitch to rear of machine following the hydraulic hoses.

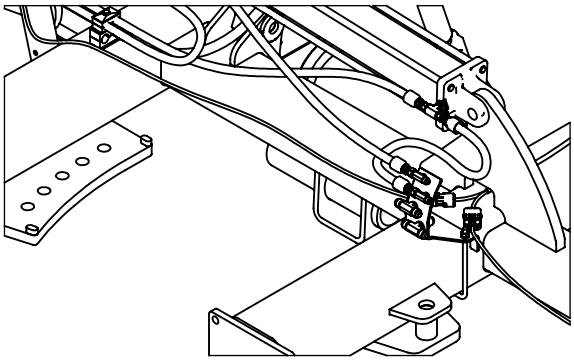

Route wiring up light stands to lights as shown

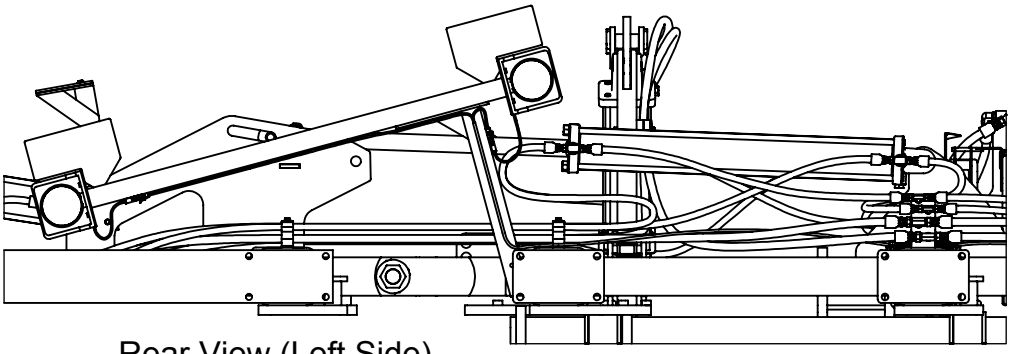

Rear View (Left Side)

Gang & Scraper Tube Layout

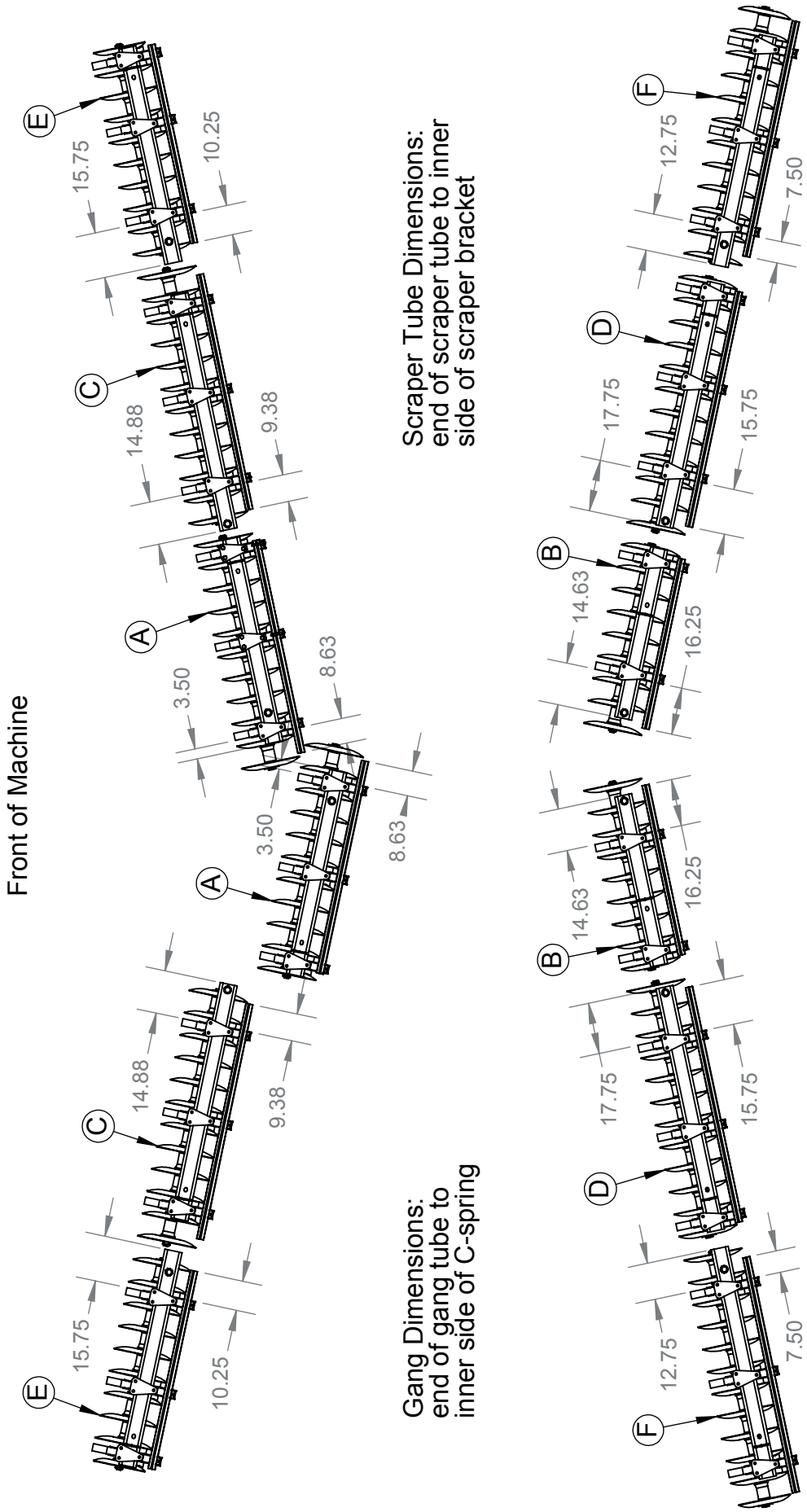

Roller Layout

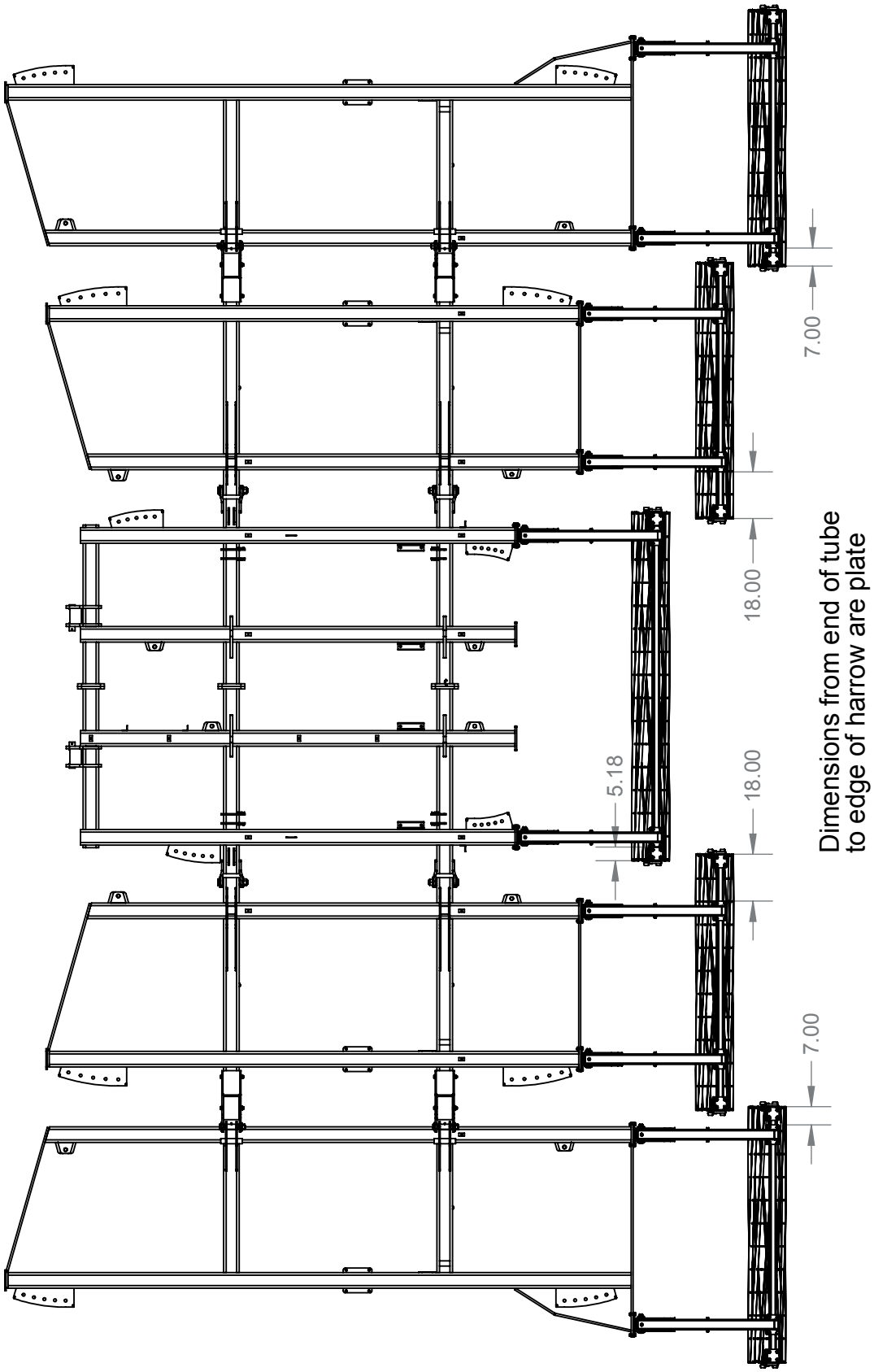

Torque Chart

TORQUE SPECIFICATIONS

AMERICAN

Bolt Head Markings

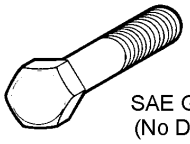

SAE Grade 2
(No Dashes)

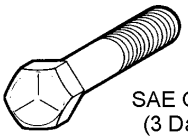

SAE Grade 5
(3 Dashes)

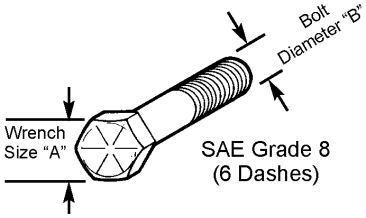

SAE Grade 8
(6 Dashes)

Proper torque for American fasteners.
Recommended Torque in Foot Pounds (Newton Meters).*

WRENCH SIZE (IN.) "A"	BOLT DIAMETER (IN.) "B" AND THREAD SIZE	SAE GRADE 2	SAE GRADE 5	SAE GRADE 8
7/16	1/4 - 2O UNC	6 (7)	8 (11)	12 (16)
7/16	1/4 - 28 UNF	6 (8)	10 (13)	14 (18)
1/2	5/16 - 18 UNC	11 (15)	17 (23)	25 (33)
1/2	5/16 - 24 UNF	13 (17)	19 (26)	27 (37)
9/16	3/8 - 16 UNC	20 (27)	31 (42)	44 (60)
9/16	3/8 - 24 UNF	23 (31)	35 (47)	49 (66)
5/8	7/16 - 14 UNC	32 (43)	49 (66)	70 (95)
5/8	7/16 - 20 UNF	36 (49)	55 (75)	78 (106)
3/4	1/2 - 13 UNC	49 (66)	76 (103)	106 (144)
3/4	1/2 - 20 UNF	55 (75)	85 (115)	120 (163)
7/8	9/16 - 12 UNC	70 (95)	109 (148)	153 (207)
7/8	9/16 - 18 UNF	79 (107)	122 (165)	172 (233)
15/16	5/8 - 11 UNC	97 (131)	150 (203)	212 (287)
15/16	5/8 - 18 UNF	110 (149)	170 (230)	240 (325)
1-1/8	3/4 - 10 UNC	144 (195)	266 (360)	376 (509)
1-1/8	3/4 - 16 UNF	192 (260)	297 (402)	420 (569)
1-5/16	7/8 - 9 UNC	166 (225)	430 (583)	606 (821)
1-5/16	7/8 - 14 UNF	184 (249)	474 (642)	668 (905)
1-1/2	1 - 8 UNC	250 (339)	644 (873)	909 (1232)
1-1/2	1 - 12 UNF	274 (371)	705 (955)	995 (1348)
1-1/2	1 - 14 UNF	280 (379)	721 (977)	1019 (1381)
1-11/16	1-1/8 - 7 UNC	354 (480)	795 (1077)	1288(1745)
1-11/16	1-1/8 - 12 UNF	397 (538)	890 (1206)	1444 (1957)
1-7/8	1-1/4 - 7 UNC	500 (678)	1120 (1518)	1817 (2462)
1-7/8	1-1/4 - 12 UNF	553 (749)	1241 (1682)	2013 (2728)
2-1/16	1-3/8 - 6 UNC	655 (887)	1470 (1992)	2382 (3228)
2-1/16	1-3/8 - 12 UNF	746 (1011)	1672 (2266)	2712 (3675)
2-1/4	1-1/2 - 6 UNC	870 (1179)	1950 (2642)	3161 (4283)
2-1/4	1-1/2 - 12 UNF	979 (1327)	2194 (2973)	3557 (4820)

METRIC

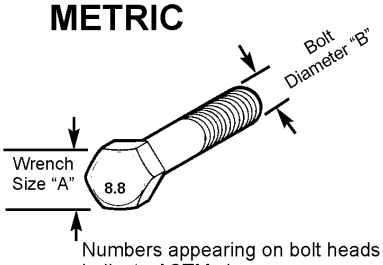

Numbers appearing on bolt heads indicate ASTM class.

*Use 75% of the specified torque value for plated fasteners. Use 85% of the specified torque values for lubricated fasteners.

Proper torque for Metric fasteners.
Recommended torque in Foot Pounds (Newton Meters).*

WRENCH SIZE (mm) "A"	BOLT DIA. (mm) "B"	ASTM 4.6	ASTM 8.8	ASTM 9.8	ASTM 10.9
8	5	1.8 (2.4)		5.1 (6.9)	6.5 (8.8)
10	6	3 (4)		8.7 (12)	11.1 (15)
13	8	7.3 (10)		21.1 (29)	27 (37)
16	10	14.5 (20)		42 (57)	53 (72)
18	12	25 (34)	74 (100)	73 (99)	93 (126)
21	14	40 (54)	118 (160)	116 (157)	148 (201)
24	16	62 (84)	167 (226)	181 (245)	230 (312)
30	20	122 (165)	325 (440)		449 (608)
33	22		443 (600)		611 (828)
36	24	211 (286)	563 (763)		778 (1054)
41	27		821 (1112)		1138 (1542)
46	30	418 (566)	1119 (1516)		1547 (2096)

Notes: