AEROMAT M20

Single-grain drill unit

Directions for use

200062787

CE

BECKER

Contents

1. Preliminary information 3

2. General information 4

2.1. Introduction 4
2.2. Hints on safety and accident prevention 5
2.3. For your own safety 6
2.4. Accessories installed 8
2.5. Tyres 8
2.6. Hydraulic system 8
2.7. Maintenance 9
2.8. General concept of the pneumatic system 10
2.9. Instructions for the AEROMAT M20 single-grain drill 11
2.10. Other versions 12
2.11. Description of the single-grain drill unit 13

3. Work in the field 14

3.1. Coupling the drill unit to the tractor 14
3.2. Adjusting the drill unit for transport and field work 15
3.3. Hydraulic folding machines 17

4. Variants of the frame 18

4.1. Folding and unfolding the HKP parallel frame 18
4.2. Folding and unfolding the HKP vertical frame 19
4.3. Transport trolley for the drill unit 20
4.4. Markers length adjustment 21

5. Settings 22

5.1. Adjusting the blow down unit height 22
5.2. Tightening the blower driving belt and checking its tension 22
5.3. Setting the blower rotational speed 23
5.4. Air pressure adjustment 24
5.5. Experimental values 25
5.6. Values obtained practically 26
5.7. Adjustment of the drill unit bleeding 27
5.8. Filling up the drill unit for sowing 28

6. Maintenance and repair 29

6.1. Installing the drums with baffles (of seeding discs) 29
6.2. Adjustment of the sowing depth 30
6.3. Adjusting the drill unit to a transport and working position 31
6.4. Overload coupling repair 31
6.5. Determining the distances of planting seeds 32
6.6. Setting the driving speed 33
6.7. Adjusting the sowing distances 34
6.8. Central fertilizer distributor 36
6.9. Description of the filling auger 38
6.10. Maintenance 39
6.11. Troubleshooting 40
6.12. Maintenance intervals 41
6.13. A set: tractor and implement weight calculation 42
6.14. Explanation of the Becker pictograms 44
6.15. DECLARATION OF CONFORMITY 46

Aeromat single-grain drill unit maintenance

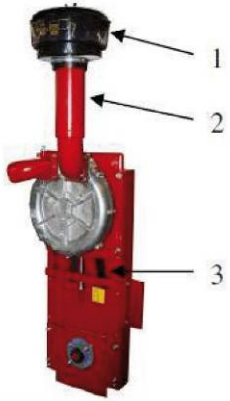

Blower

- ***Centrifugal filter (1)*** to be cleaned 1 time a day, in dusting environment 3 x a day;
- ***Filter in the suction pipe (2):*** 1 x a year, in dusting environment 1 time a day;
- ***Belt tension (3):*** to be checked every day;
- ***Manometer:*** clean the elastic air pipe 4 times a year.

Liquid fertilizer tank

- Check the dosing wheel operation.
- Check the flexible fertilizer hoses for their leak tightness. Check the air terminals.
- Check the fertilizer drill opener for its possible blocking; check its working position (position: 5 cm deeper and 5 cm next to the drill opener).
- 1 x before the season, lubricate the chains.
- 1 x before the season, check the oil level in the transmission gear.
- 1 x after the season; intensely clean the liquid fertilizer tanks.

Drill set

To be checked 1 time a year:

- the housing cover sealing and the housing;
- the blower together with its sealing;
- the air hose mounting;
- sprockets, chains and the tension roll;
- cleaning the optical sensor;
- the wear and tear of the parallelogram;
- the overload coupling and shear bolts.

Drill set

- 1 time a year, check the wear and tear condition.

Blower power transmission system

Lubricate the PTO shaft:

- 1 time before the season;
- 1 time a week during the season;
- 1 time after the season.

Power transmission system

- External and internal chains to be lubricated once a day during the season.
- 1 time before the season, check the air pressure in the tyres (2-2.5 bar) in the system of the HKP folding frame.
- 1 time before the season, clean the skid system of the transmission gear mechanism.

Drill unit

To be checked 1 time a year:

- Check the drums with baffles and the ejectors for potential defect;
- Clean the drill unit housing and the drum with baffles.

Prior to starting the single-grain drill unit, one should study the service manual and all the safety hints and then follow them.

Subsequent users of the drill unit should be also acquainted with all the safety hints.

Before a tractor is started and the drill unit started-up, the nearest surroundings of the equipment should be checked, also for proper visibility!!

2. General information

2.1. Introduction

This service manual can guarantee safe and efficient operations of the Aeromat single-grain drill unit.

The service manual is an integral part of the drill unit and must be kept with the drill unit in a place with easy access. Before any work is started, the operator must thoroughly study it and learn its contents. A basic condition for a safe work is to obey all the safety hints and instructions for use contained in this service manual.

Moreover, any local industrial safety regulations and general safety regulations related to the single-grain drill unit are applicable.

Illustrations in this service manual are to make it easier to understand the concept behind the drill unit, and they may differ from the actual option of the unit.

Such terms as: ‘on the left’, ‘on the right‘, ‘at the front’, ‘at the back’ describe the location of a part, when one is looking at the single-grain drill unit in the direction of travel. Only when the regulations and hints below are scrupulously followed, a failure-free and accident-free operation and a long-term life-span of the single-grain drill unit can be guaranteed.

Warning signs are denoted in this service manual with the symbol presented here! One should absolutely obey these hints and act cautiously in order to avoid any accidents, or personal and material damage.

This unit must be used in accordance with its purpose

The Aeromat single-grain drill has been designed to be used for agricultural work only. Any other use will be considered not to be in conformity with its purpose. The manufacturer will deny any civil liability for damage resulted from such actions. They will be taken at the user’s risk only.

The requirement of using the single-grain drill unit in accordance with its purpose will also include observing the conditions of operation, maintenance and repairs set down by the manufacturer.

The Aeromat single-grain drill unit may be operated, maintained and repaired by persons who have been authorised to do so and have been instructed about threats. Industrial safety regulations as well as other, generally accepted safety, labour medicine and traffic regulations must be obeyed.

Unauthorised modifications in the Aeromat single-grain drill are forbidden and they will exclude the manufacturer’s civil liability due to any damage caused by them.

2.2 Hints on safety and accident prevention

Before the drill unit and tractor are started, one should check both machines for their compliance with the traffic and occupational safety regulations!

- Apart from the hints contained in this service manual, generally accepted safety and industrial safety regulations must be obeyed!
- Safety and information tags which are placed on the drill unit give important hints on a safe operation, and following can guarantee safety of the operator!
- While on public roads, one should obey adequate Highway Code regulations and provisions!
- Before starting the unit, the operator must study all the operational devices and elements and their functioning.
- The operator should wear tight-fitting clothing; loose clothing is inadvisable!
- Prior to starting the tractor and starting-up the drill unit, one should check the nearest surroundings of the equipment (for the presence of children!), and also check the visibility!
- In the course of work and transport, it is forbidden to carry people on the single-grain drill unit!
- Couple the drill unit with a tractor in a proper way only by using the three-point hitch of the tractor!
- Special caution must be exercised while coupling to and disconnecting the drill unit from a tractor!
- Make sure that the drill unit is stable!
- Observe the requirements for axle load, total mass and transport overall dimensions!
- Check and install transport accessories such as lights, warning devices and possibly safety devices.
- Releasing elements of the quick couplings must hang down loosely, and they must not be activated automatically when the drill unit is abandoned!
- While driving the drill unit, one must not leave the driver's seat!
- The reactions while driving, steering and braking are influenced by the suspended drill unit and ballast weights. That is why one must pay attention to the tractor's steering and braking characteristics!
- While negotiating bends, one must make allowance for the big protrusion of elements and/or swing mass of the single-grain drill unit!
- The single-grain drill can be started only when all the safety devices are mounted and placed in an active position!
- It is forbidden to stay in the drill unit's working zone!
- Under no circumstances, one can stay within the range of rotation and tilt of the single-grain drill unit!
- The hydraulic folding frames can be operated only when there are no people within their tilt range!
- Powered elements (e.g. hydraulic systems) might be a potential source of crushing or cutting limbs!
- Before leaving the drill unit, one should lower it down to the ground, activate the parking brake, switch off the engine and remove the key from the ignition switch!
- It is forbidden to stay between the tractor and the drill unit, before the tractor is protected against rolling down using the parking brake and/or placing wedges under the wheels!
- Block the markers in their transport position!

2.3. For your own safety

This section contains general hints on safety. Additionally, individual sections of the service manual provide special hints which are not presented here. The safety hints must be observed

- for one's own good;
- for safety of the outsiders; and
- to ensure safety of the drill unit.

Misconduct while operating agricultural machinery and devices can cause many dangers. That is why one should operate the equipment with special care and never under the pressure of time.

In case you are an employer:

you should regularly inform your employees who operate this drill unit about these hints on safety and regulations in force. Stickers placed on the drill unit are to make the operations safer. It is forbidden to remove the stickers. In case they get illegible or come unglued, one can order new ones and place them in a proper place.

Warning symbols

Aeromat HKT

While working with the drill unit, make sure that the power take-off is switched off. The permitted rotational speed of the power take-off is, depending on the fitting, 540 or 1,000 rpm.

Warning symbols

Aeromat HKP

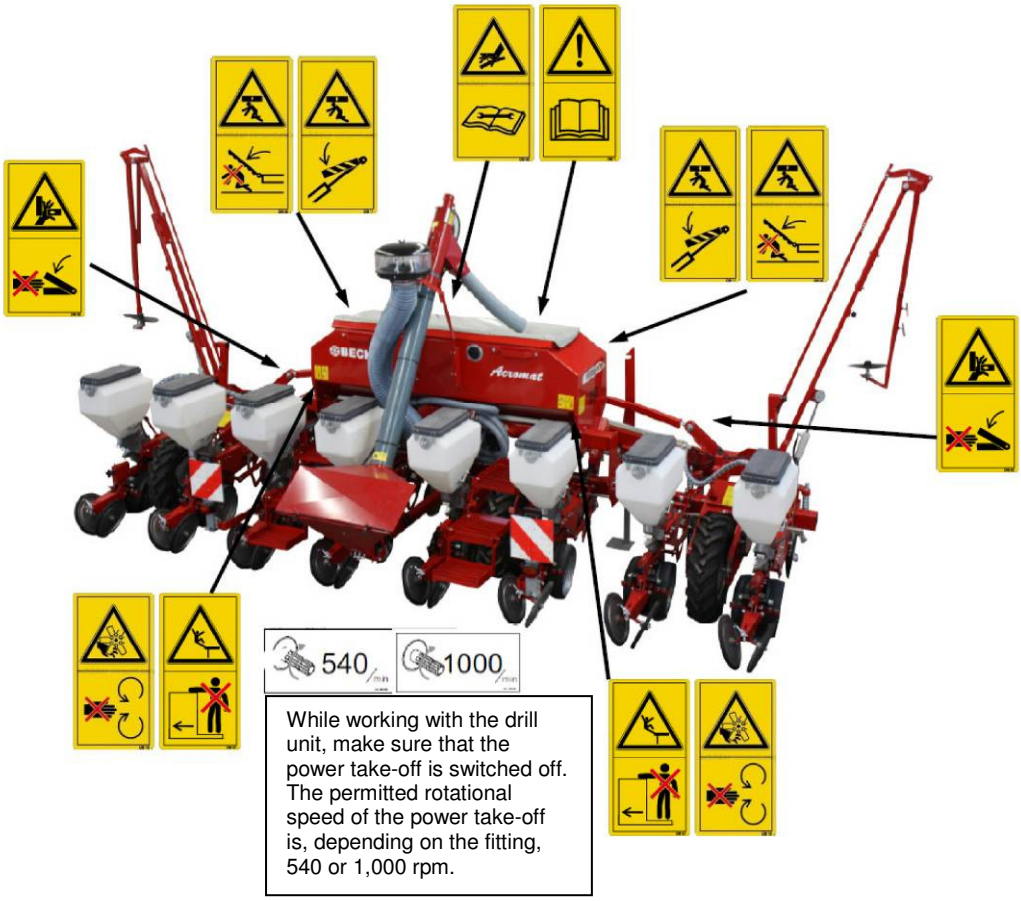

Aeromat P

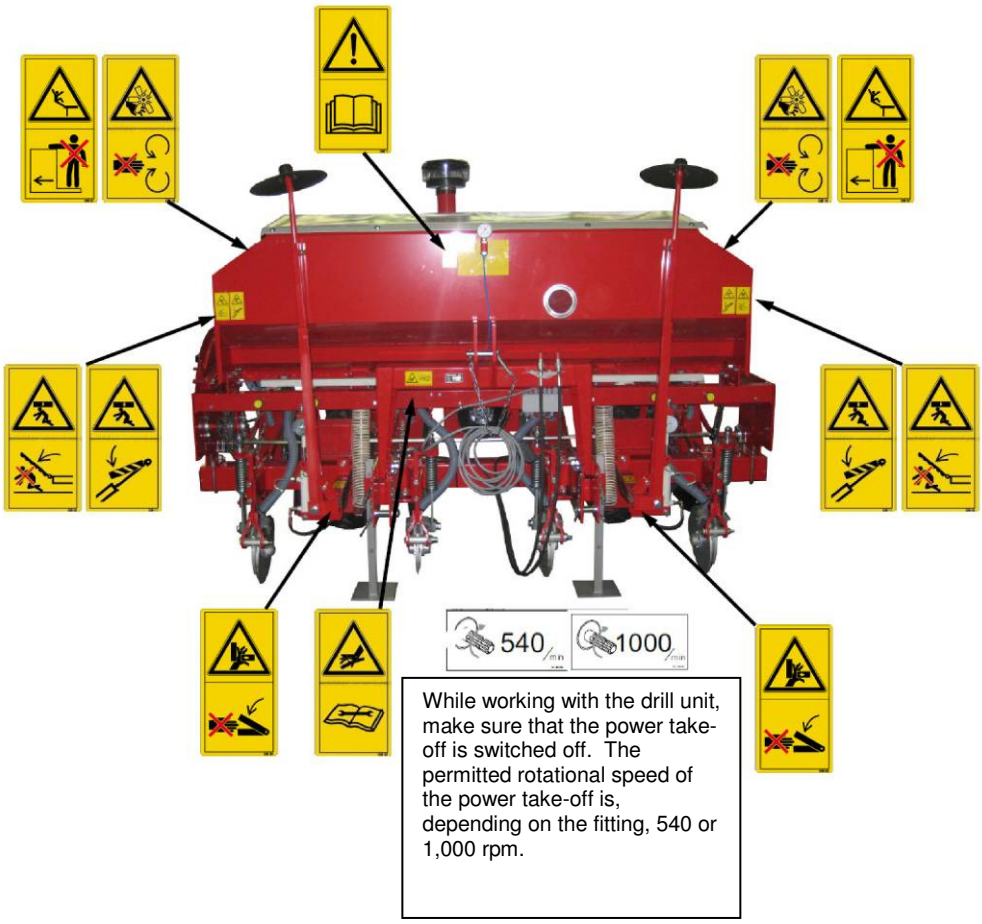

2.4. Accessories installed

- Before attaching and removing accessories on a tractor's three-point linkage, place the service device in such a position so that the drill is not accidentally lowered down or lifted up.!
- In case the drill unit is installed on a tractor's three-point linkage, make sure that the assembly categories of the tractor and the drill unit are compatible or are adapted to each other!
- While attaching the drill unit to a three-point linkage with use of an external controller, do not enter between the tractor and the drill unit!
- In the transport position of the drill unit, always check that the tractor's three-point linkage is properly secured against any side movement!
- In the course of transporting the drill unit along a public road with the drill lifted up, one should block the service lever before leaving the drill unit!

2.5. Tyres

Before doing anything with the tyres, one should place the drill unit in a stable position and protect it with wedges to prevent inadvertent movement!

- To install the tyres requires appropriate technical knowledge and adequate assembly tools!
- Only specialists using adequate assembly tools can make repairs of the tyres and wheels! (see page 38).
- One should check pressure in the tyres on a regular basis and keep the recommended air pressure!

2.6. Hydraulic system
(working pressure max. 175 bar)

High pressure is employed in the hydraulic system!

Before one starts doing anything with the hydraulic system, the drill unit should be lowered down to the ground, the pressure reduced and the tractor engine switched off!

While connecting servo-motors and hydraulic motors, make sure that the hydraulic hoses are connected appropriately!

While connecting the hydraulic hoses to the hydraulic system of a tractor, make sure that both the hydraulic system of the tractor and that of the drill unit are not under pressure!

In the hydraulic functional connections between a tractor and the drill unit, one should properly mark the male and female ends of the pipe connectors so that the connections are not made mistakenly! Otherwise, there is a risk of a wrong operation (e.g. lowering down instead of lifting up)!

The hydraulic hoses must be checked regularly, and in case they are damaged or decay they must be replaced! Exchangeable hoses must satisfy the technical requirements of the manufacturer of the single-grain drill unit (see page 39)!

Because of the danger of injuries, have any leakages located by a specialist (a service workshop) using adequate tools!

Liquids (hydraulic oils) leaking under great pressure can damage the skin and cause serious injuries! In case of injuries, immediately seek medical assistance!

2.7. Maintenance

- Prior to any repairs, maintenance, cleaning and eliminating defects, one should turn off the power transmission and the engine of the tractor!!
- Remove the key from the ignition switch! Apply the parking brake and put wedges up to the wheels!
- All the bolts and nuts must be regularly checked for their torque and should be tightened up properly!
- Before any maintenance operations of a lifted with a raised drill unit, it should be protected against falling down by proper supports!
- While replacing spare parts with sharp edges, one should use proper tools and protective gloves!
- Used oils, greases and worn out filters, fertilizers and old sowing material should be subject to a proper recycling process, in accordance with the provisions in force.
- Prior to doing anything with the electric system, the electric power supply must be switch off!
- Prior to electrical welding of parts of a tractor and the drill unit installed on it, disconnect the cables from the alternator and battery of the tractor!

Civil liability for collateral damage

Drill units manufactured by the Becker company are designed with adequate care. However, despite this – even in case they are operated in accordance with their purpose – there may happen some irregularities in the process of drilling, leading even to a total breakdown, which can be caused by some reasons as in the examples below:

- various composition of sowing material or fertilizer (e.g. different size or density, geometrical forms, seed dressing, closed surface of the grain);
- blocking up or forming of small bridges (e.g. through foreign bodies, chaff in the sowing material, glutinous dressing, humid fertilizer);
- wear of fast-expendable parts (e.g. drill openers, dispensers, fan belts);
- damage due to some external factors;
- wrong rotations of the drive and wrong riding speed;.
- wrong adjustment of the drill unit (incorrect attaching or non-observance of tables of settings).
- in case of this sort of problems, one should contact the Danagri company.
- the manufacturer will not be held civilly liable for any collateral damage.

Original spare parts and accessories made by Becker have been designed especially for the single-grain drill unit. Spare parts and accessories made by other producers are not tested and accepted by us.
Therefore, mounting and/or using products supplied by other manufacturers may in some circumstances negatively affect the designed structural characteristic of the drill unit and thus threaten the safety of people and the unit itself.
Any civil liability of the Becker company is ruled out for damage incurred as a result of not applying original spare parts and accessories.
The manufacturer will not be held civilly liable for any collateral damage!!

2.8. General concept of the pneumatic system

Side blower (1) sucks the air from outside and cleans it in the filtering cyclone (2). The cleaned compressed air goes through a tubular distributor and spiral hoses (3) to appropriate nozzles (4) of the single-grain drill sets (5).
Compressed air blows the excess of grain from chambers, while at the same time the grain being in the bottom of the chamber is stopped by the flowing air (see the introduction to the Aeromat single-grain drill unit, page 11). Particular attention should be paid to setting the air pressure in the pneumatic system and adjusting the bleeding (6) of the single-grain drill sets (5).

- Air pressure adjustment, see page 23;
- Bleeding adjustment, see page 26.

In case of drills with a main fertilizer distributor, fertilizer is transported through a compressed air installation to outside fertilizer drill openers.

Such a device is reliable and can be used without too much maintenance. In case of a breakdown due to wet fertilizer or drill openers being clogged up, one should lift up the drill unit from the ground and switch off the blower!
Then, the hoses, injector or drill openers can be cleaned. Fertilizer should be taken away to a special tank. Before the blower is started again, all the hoses should be properly mounted using screwed clamping rings!

Make sure that the compressed air does not accidentally escape outside the system! Each leakage causes a drop in pressure, and this in turn is the reason for unnecessarily high blower speeds.

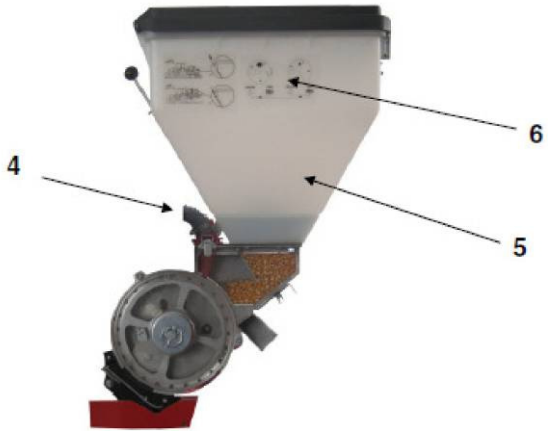

Fig. 1

Fig. 2

2.9. Instruction for the AEROMAT M20 single-grain drill unit

Aeromat is a drill unit having a unique construction, designed for planting maize, peas, beans, beets, etc. The central power transmission serves a drum with baffles which have openings in the form of a funnel. Individual chambers are then filled with several seeds. When a filled chamber comes out of the sowable material, the compressed air blows out of the chamber the excess seeds. At the same time, the grain which is in the bottom of the chamber is stopped by the air stream which flows next to it.
Thanks to the funnel shape openings in the chambers, seeds are arranged automatically, so that even in case the grains have different sizes, single-seed drilling takes place without having to adjust the chambers.

The low-noise blower with maintenance-free bearings produces the compressed air required. The blower is driven via the PTO shaft of the tractor or by a hydraulic motor.
The star ejector additionally guarantees a subtle ejection of clogged grains from the openings in the chambers.
With such a principle employed, sowing of calibrated or not-calibrated sowable material is excellent.

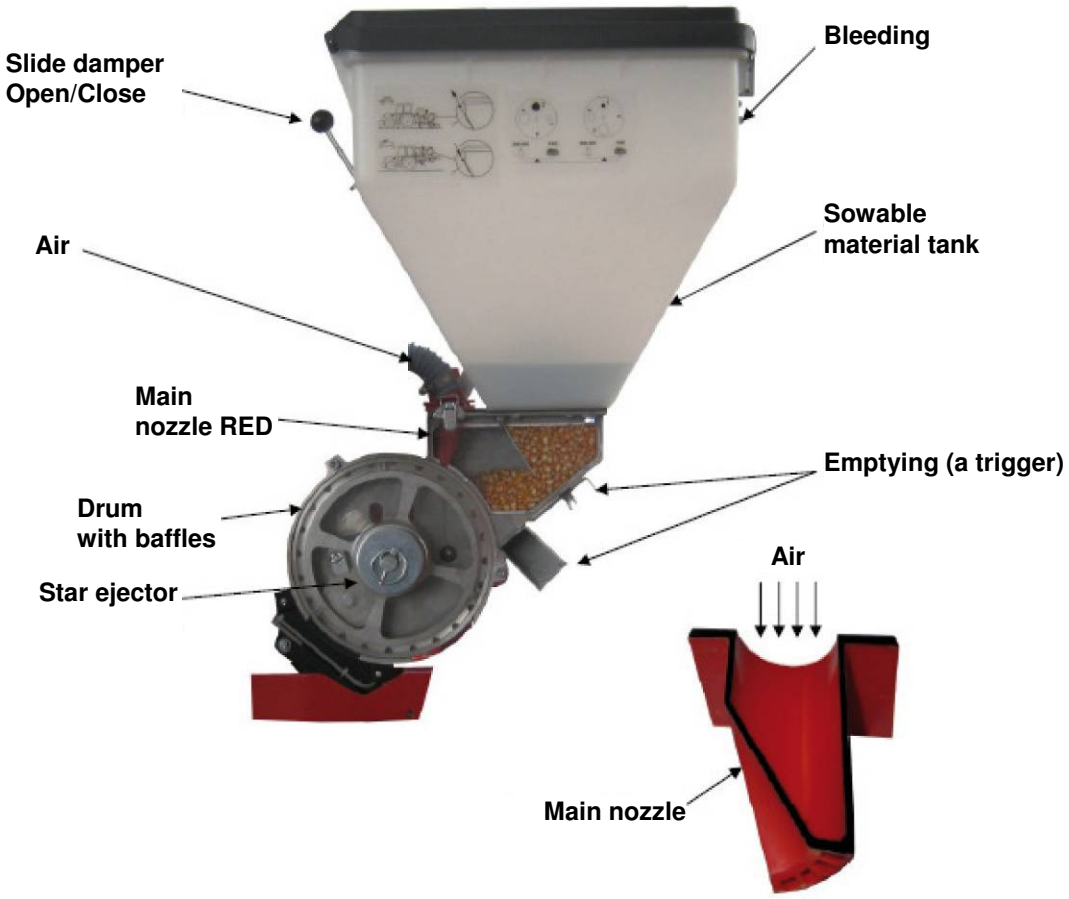

Fig. 3

2.10. Versions of the single-grain drill unit

It is not allowed to transport on public roads drills with a transport width in excess of 3 metres. Appropriate lenghtwise transport trailers are available for the drills.

Type	Number of rows	Drilling unit	Weight [kg]	Efficiency requirements	Frame		Blower	rpm	Tyre size	Input volume		A Transport height (cm)	B Transport width (cm)	C Transport depth (cm)
					Rows spacing	Frame type				Sowable material	Fertilizer			
Aeromat „Eco-Line"	4	S	580	30 / 40	45-80	Rigid	SKG294 Mech.	540(450)	5.00-15	30l	–	220	300	170
		DTE	740	52 / 70	65-80	Rigid			7.50-15	30l	–			
	6	S	750	52 / 70	45-80	Rigid	SKG294 Mech.	1000(650)	5.00-15	30l / 55l	–	320	300	180
		DTE	990	59 / 80	65-80	Rigid			7.50-15	30l / 55l	–			
	6	S	920	52 / 70	45-80	Telescopic	SKG294 Mech.	1000(650)	5.00-15	30l / 55l[1)]	–	320	300	180
		DTE	1160	59 / 80	65-80	Telescopic			7.50-15	30l / 55l[1)]	–			
	8	S	980	59 / 80	45-80	Rigid	SKG294 Mech.	1000(750)	5.00-15	30l / 55l	–	300	300	180
		DTE	1320	66 / 90	65-80	Rigid			7.50-15	30l / 55l	–			
	8	S	1550	74 / 100	45-80	Hydraulic folding parallel	SKG294 Mech.	1000(750)	5.00-15	30l / 55l	–	350	300	190
		DTE	1980	90 / 122	65-80	Hydraulic folding parallel			7.50-15	30l / 55l	–			
	12	S	1380	66 / 90	45-80	Rigid	SKG410 Mech.	1000(750)	7.5-0-15	30l / 55l	–	300	300	180
		DTE	1860	90 / 122	65-80	Rigid			7.50-15	30l / 55l	–			
Aeromat „Farm-Line"	4	S	820	52 / 70	45-80	Rigid	SKG294 Mech.	540(450)	7.50-15	30l	700l	220	300	180
		DTE	1020	59 / 80	65-80	Rigid			7.5-0-15	30l	700l			
	6	S	1020	59 / 80	45-80	Rigid	SKG294 Mech.	1000(650)	7.50-15	30l / 55l	700l	320	300	180
		DTE	1350	66 / 90	65-80	Rigid			7.50-15	30l / 55l	700l			
	6	S	1220	66 / 90	45-80	Telescopic	SKG294 Mech.	1000(650)	7.5-0-15	30l / 55l[1)]	700l	320	300	190
		DTE	1530	74 / 100	65-80	Telescopic			7.50-15	30l / 55l[1)]	700l			
	8	S	1230	66 / 90	45-80	Rigid	SKG294 Mech.	1000(750)	7.50-15	55l	700l	300	300	180
		DTE	1670	74 / 100	65-80	Rigid			7.5-0-15	55l	700l			
	8	S	2000	90 / 122	45-80	Hydraulic folding parallel	SKG410 Mech.	1000(750)	7.50-15	30l / 55l	700l	350	300	190
		DTE	2440	100 / 136	65-80	Hydraulic folding parallel			7.50-15	30l / 55l	700l			
	12	S	1610	74 / 100	45-80	Rigid	SKG410 Mech.	1000(750)	7.5-0-15	55l	700l	300	300	180
		DTE	2100	90 / 122	65-80	Rigid			7.50-15	55l	700l			
Aeromat „Profi-Line"	4	S	880	52 / 70	45-80	Rigid	SKG294 Mech.	540(450)	7.50-15	30l	700l	220	300	180
		DTE	1080	59 / 80	65-80	Rigid			7.5-0-15	30l	700l			
	6	S	1320	66 / 90	45-80	Telescopic	SKG294 Mech.	1000(650)	7.50-15	30l / 55l[1)]	700l	320	300	190
		DTE	1630	74 / 100	65-80	Telescopic			7.50-15	30l / 55l[1)]	700l			
	8	S	2150	90 / 122	45-80	Hydraulic folding parallel	hydr.	hydr.	7.5-0-15	55l	1.000l	350	300	200
		DTE	2580	100 / 136	65-80	Hydraulic folding parallel			7.50-15	55l	1.000l			
	12	S	2350	100 / 136	45-80	Hydraulic folding vertical	SGK410 mech./ydr.	1000(750)	7.50-15	30l / 55l	–	400	300	180
		DTE	2960	110 / 150	65-80	Hydraulic folding vertical			7.5-0-15	55l	–			

Table 1

- Together with the sowing: about 15 kgs per row with the 30-litre tank and about 30 kgs per row with the 55-litre tank **- to be filled in the field only!**
  Together with fertilizer: approximately 700-1,000 kgs.

2.11. Description of the single-grain drill unit

Aeromat – row fertilizer distributor

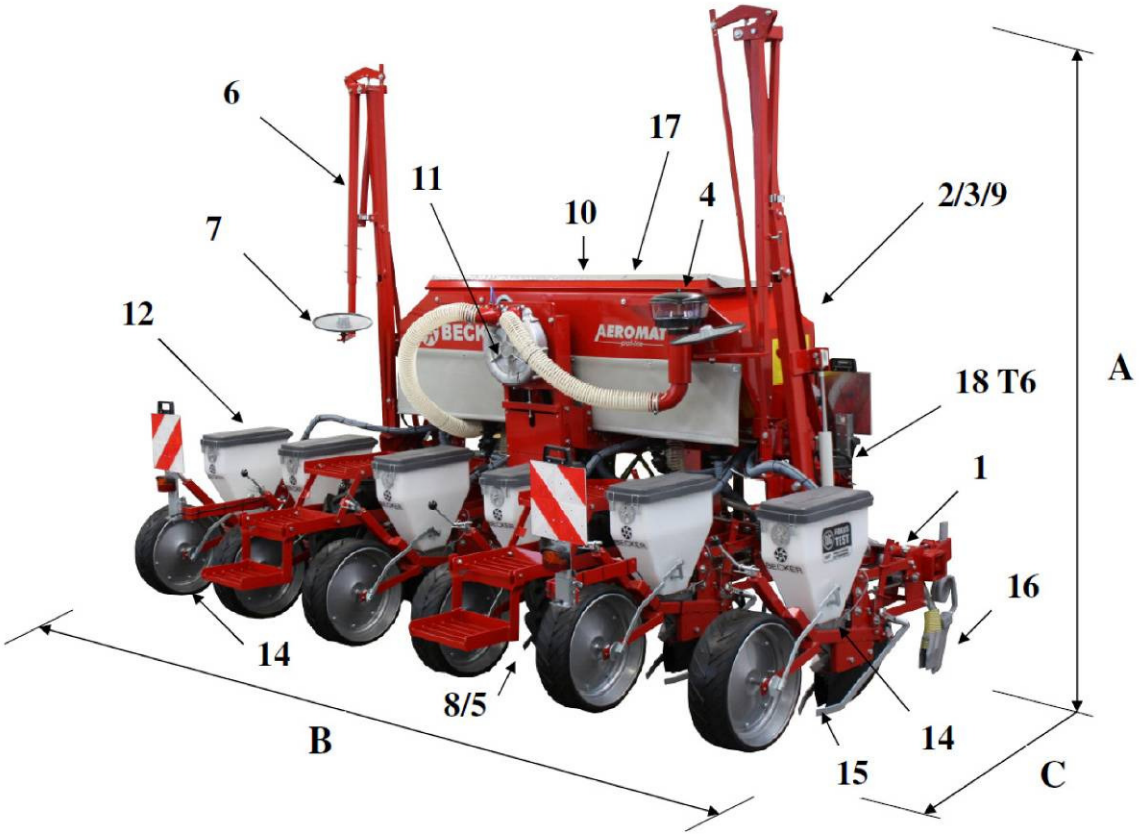

Fig.4

Item	Description
1	Toolbar
2	Bottom rocker arm connector
3	Upper rocker arm connector
4	Air intake filter
5	Drive wheel arm
6	Marker arm
7	Marker disc
8	Drive wheel
9	PTO shaft connector

Item	Decription
10	Air pressure gauge
11	Blower
12	Seed hopper
13	Rubber pressure roll
14	Drill opener housing
15	Seed coverer
16	Fertiliser coulter
17	Fertiliser hopper
18	Adjusting ring

3. Work in the field

3.1. Coupling the drill unit with a tractor

After the drill unit has been attached to a tractor, the driveability of the tractor can be adversely affected due to the front axle being unbalanced. Front ballast should be fitted (calculation, see pages 41-42). While driving on public roads, one should follow the road code regulations!

- **Attention! While lifting up the drill unit, the driveability of the tractor can be Adversely affected due to the front axle being unbalanced. Front ballast should be mounted!**
- **Study the section 'A set: tractor and suspended tool' on page 41.**
- **Masses of the single-grain drill units are shown in Table No 1 on page 12.**

In order to attach the drill unit, reverse the tractor towards the drill unit.
Connect the upper and lower lift arms. Do not forget to consult the assembly instruction placed on the PTO shaft, as there are various manufacturers and different types of jointed shafts and attach the drill unit following the instructions. The top link should be fixed in a position where it is slightly raised with respect to the drill unit and holds the unit horizontally! While drilling the tractor's hydraulic system must be placed in the float position, otherwise the drive wheels may tend to skid. A drill unit with a wider width (a transport width of above 3 m) may be transported on public roads either under a special permit or on a proper transport trailer. Before detaching the drill unit, the supports should be lowered and secured! The drill unit must be always parked on a level surface and prior to the upper and lower lift arms being disconnected, its stability should be checked!

Fig. 5

Transport on public roads

While transporting the drill unit on public roads, one should follow the road code regulations. If the tractor's taillights and licence plates become obscured or the drill unit projects 1 metre beyond the tractor's taillights, a complete lighting system should be installed on the drill unit. Additionally, at night, left and right contour lamps should be installed at the front.
All the elements that pose a threat to road traffic, projecting more that 40 cm beyond the contour lamps, must be provided with a clear lighting and warning plates, in accordance with DIN 11030, and the road traffic regulations! When the drill unit is raised, the taillights must not be higher than 0.9 metre, and the lighting – not higher than 1.50 metre above the road surface. The warning plates must be placed in such a way that the stripes on them are directed outwards and downwards. The respective longer side can be installed horizontally or vertically.
On the left and right hand side of the drill unit, at least two amber flash lamps should be installed.
The Becker company offers a complete lighting set as a special option.
GEKA system with assembly elements:
Order No: 200242832.

Fig. 6

Fig.7

Fig.8

3.2. Adjusting the drill unit for transport and field work

Transport

1. Always detach the drill unit from a tractor
2. Fold both markers and secure their position mechanically.
3. Fold down hydraulically the external drilling units and disconnect them electrically (see the monitor service manual 1502).
4. Tip forwards the last rear parts of the mounting steps.
5. Close the slide dampers in the drilling units and the fertilizer distributor.
6. Attach the drill units at the top
7. Switch off the monitor.
8. Switch on the tractor's hydraulic system.

Fig. 9

If necessary, pull in both markers with a view to keeping the maximum transport height of 4 metres.

Adjusting the drill unit on the field

1. Lift up the drill unit.
2. Unlock the tractor's hydraulic system!
3. Pull out the external drilling units – fold them up
   3.1. Switch on the monitor.
   3.2. Push the monitor button (Fig. 10).
   3.3. Turn on the hydraulic valve on the tractor so that the external drilling units pull out.
   3.4. Unfold the markers.
   3.5. Check the state of the sowable material and fertilizer and fill up if required.

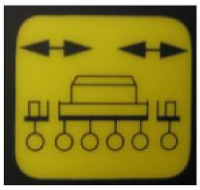

Fig.10

4. Open the slide dampers in the drilling units and fertilizer distributor.
5. Check the spacing between the grains sown and if necessary make correction (see page 31).
6. Set up the quantity of fertilizer and the depth of fertilizer drill openers.
7. Lower down the unit to its working position (see page 30).
8. **Set up the bleeding of the drilling units according to TKG (mass of a thousand grains) (see page 26).**
9. Check the nozzles and clean them if necessary (see page 27).
10. Turn on the power take off.
11. Adjust the tractor's rotational speed (manual accelerator), to obtain the blower's speed of e.g. 80 mbar (maize) (see page 25).

12. Lower down the marker.
    12.1. Push the button „Marker” (Fig. 11) on the monitor control panel and lower down the marker on a proper side (see the monitor service manual 1502).

    12.2. Check the position of the marker and correct it if need be (see page 21).
13. Lower down the drill unit while starting in order to avoid blocking the blades. Air pressure in the manometer 80 mbar!

14. After first 50 metres, check the depth of sowing the sowable material, fertilizer and the spacing in the field by observing visible grains.

Fig.11

3.3. Hydraulically folded machines

Maximum working pressure of the hydraulic system is 175 bar!

Transport width of drill units which have a large working width can be adjusted to 3 metres during road transport by folding down the side elements. With the use of two hydraulic servomotors, the side elements can be folded down together with the external drilling sets. Similarly, using hydraulic servomotors, the side markers can be alternatively folded down.
In case of drill units with control solenoid valves in the hydraulic system, the four-way valves of the steering block are activated by the relevant switches. A valve is open when the switch is in position „Ein" (On).

Steering box

Fig.12

Installation of the steering box of the hydraulic system solenoid valves

The steering box should be installed using the holders on the drill unit, within the operator's field of view. Minimal distance between the radio transmitters and the aerials should be 1 metre. Electric power supply (12 V) is to be connected with the use of a normalized unipolar socket that must be installed in such a way that it is always live! In case the tractor's engine is stopped, the plug must be taken out of that socket!
If a drill unit is equipped with 1502 monitor, it will be operated with the use of this 1502 monitor (see the service manual of the monitor and on pages 15-16).

1502 Monitor

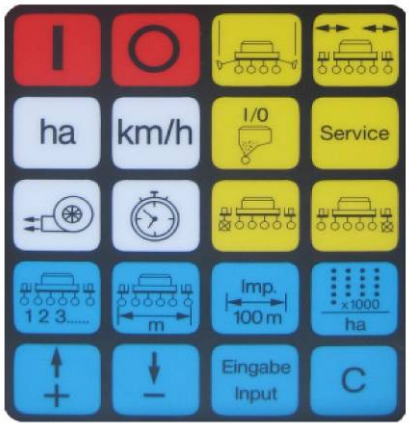

Fig.13

Emergency operation!

In case an electronic part is broken and it is impossible to normally operate the valves through the steering system, it is possible to open an individual valve using the screws at the bottom of the electromagnetic coils. Such a screw must be driven into the housing to the depth of about 10 mm, and the valve should be pressed down at the same time. The solenoid valves without these screws are 'open' without any electric tension so that they do not require emergency operation! After a defect is eliminated, do not forget to re-tighten the screws.

Four-way steering block

Switching off in an emergency

Fig.14

4. Variants of the frames

4.1. Folding down and folding up the HKP parallel frame

While transporting the drill unit on public roads, the tractor's hydraulic system should be locked. Folding frames are automatically folded down through a blocking mechanism especially designed for this purpose! During folding and unfolding people should stand well clear of the drill. Maximum working pressure of the hydraulics is 175 bar!

In addition to the paragraphs shown on pages 15 and 16, in case of a HKP drill unit, the paragraphs below should be observed.
Both parts (1) are folded down parallel for the purpose of transport. The method of folding down a parallel frame enables also field work with a part of the total width being used, since the middle part and the folding elements are equipped with their own drives. Thanks to the way the parallelograms are led, the folding elements can without any problems compensate for the difference in the height up to 15 cm! This makes it possible to get more even and better depth of the drill openers of the fertilizer distributors and drilling sets!

Fig.15

The following is important when changing the direction of the side elements!

1. A complete drill unit must be lifted up by a three-point hydraulic system!
2. Both arms of a marker (2) must remain in the upper parking position before they are folded down (Fig. 16)! When a tractor's hydraulic system is switched on, the marker automatically gets folded down to the admissible transport width of 3 meters. Make sure that the mechanical safety device (3) is fastened correctly. The monitor should be turned on, and the tractor's hydraulic system blocked. While pulling out, the sequence must be in a reverse order!

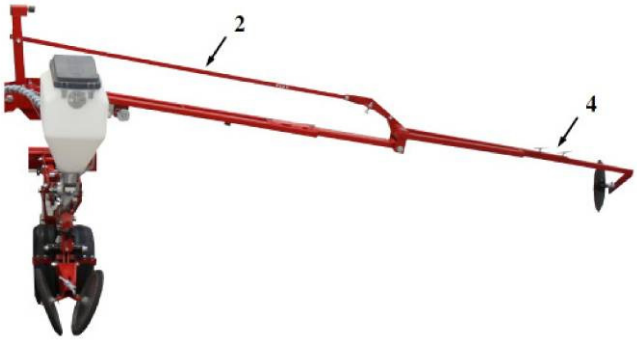

Fig.16

Folding marker for HKP drill units

Working position (Fig. 16):
1. A folding marker (2) of HKP drill unit takes it working position, when a tractor's hydraulic system is turned on the machine folded up.
2. The position of a movable element (4) should be adjusted to a proper distance (see page 21).

Transport position (Fig. 17):
1. When a tractor's hydraulic system is turned on and the folding elements (Fig. 15) are folded down, the marker is also automatically folded down (a parking position).
2. Before transporting, the tractor's hydraulic system must be blocked!

Fig.17

Note: Air pressure for drive wheels: 7.50 – 15 bar.
Middle part: 2.5 – 2.75 bar.
Folding part 1.25 – 1.5 bar.

4.2. Folding down and folding up the HP vertical frame

Be careful with a large working width. Observe caution when folding and unfolding the frame.

In addition to the paragraphs shown on pages 15 and 16, in case of a HK drill unit (hydraulic folding), the provisions of the paragraphs below should be observed.

Important when folding up and folding down the collapsible elements.

1. The complete drill unit must be raised by a three-point hydraulics system. A manual protection (5) should be unlocked.
2. Folding elements (1) should be pulled aside to a working position and the telescope side elements (2) pulled out.
3. While folding down, one should act In the reverse order.

Folding marker for HK drill units

Working position (Fig. 23):
1. Folding marker of a HK drill unit is secured by a pin (3)! The pin should be removed when a proper working position is being adjusted.
2. The marker (4) may be then hydraulically adjusted to a proper working position!

Transport position (Fig. 22):
3. Fold down the hydraulically folding marker (4).
4. Secure the folding marker (4) for transport using the pin (3).

Both collapsible parts (1) are folded down vertically for transport. After they are folded down, a manual safety lock (5) should be used!

Operation of the marker the same as in case of HKP.

Fig.18

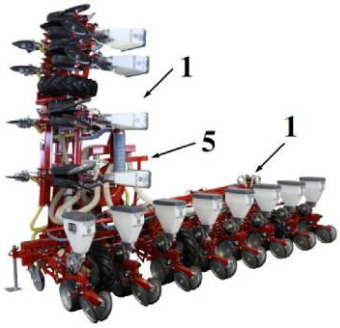

Fig.19

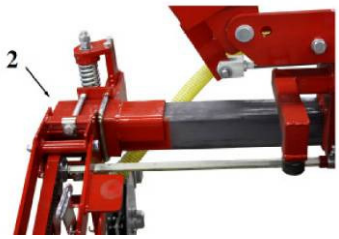

Fig. 20

Fig.20

Fig.23

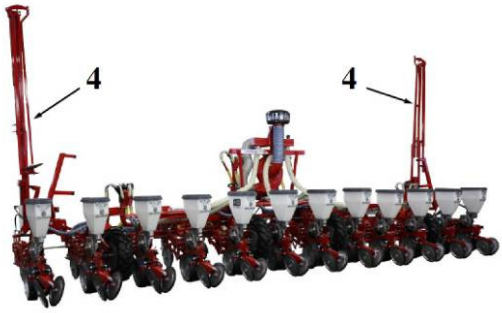

Fig.22

4.3. Transport trolley for the drill unit

Attention: While attaching or detaching the drilling unit from a tractor, no one can stay between the tractor and the drill unit!
Air pressure in the transport wheel tyres 7.00-12 8 PR = 3.50 bar.
After 2 hours of operation, the wheel nuts should be tighten up! (torque 220 Nm).

Additionally, apart from the paragraphs presented on page 14, in case of a transport trolley the recommendations below should be followed!
Drill units having larger working widths can be also transported on trailers, and thus the range of the hydraulic system and of the folding parts are reduced. For such drill units, Becker supplies transport trailers (Fig. 24) which are readjusted from a transport position to a working position in the following way.

Fig. 24

Changing to working position!
1. Lower the support (3), secure it with the pin and lock.
2. Disconnect the tractor from the drawbar (4), for this purpose unlock the pin and release the bottom lift arm pin.
3. Attach the tractor through the bottom lift arm pin to the three-point catch.
   Note – automatic locking!
4. Slightly lift up the drill unit and install the front wheel (1).
5. Carefully lower down the drill unit and attach the upper connector.
6. Entirely lift up the drill unit, attach the drawbar (4), slightly tilt the rear wheel (2) upward and lock the drawbar and the wheel! Raise and secure the support
7. Unlock the marker!

Fig. 25

Changing to transport position!
1. Lock the marker!
2. Lift up the drill unit, tilt backward the rear wheel (2), lean the drawbar (4), shift to the bottom and secure the support (3).
3. Carefully lower down the drill unit, until it is possible to unlock the upper connector pin (5).
4. Lift up the drill unit again and tilt backward the rear wheel (1).
5. Lower down the drill unit and unlock the bottom rocker arm .
6. Attach the tractor to the draw bar (4), lift up the support (3) and secure it!

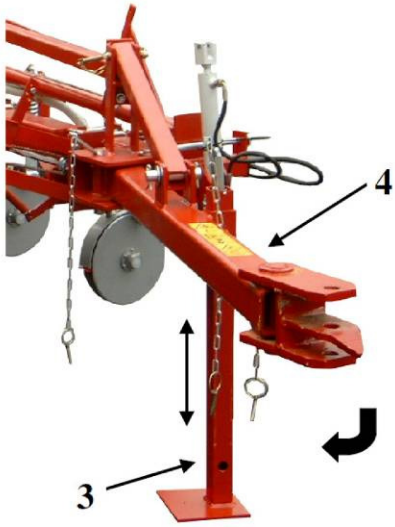

Fig. 26

4.4. Markers length adjustment

Attention: The marker extends out beyond the contour of the drill unit! The cutting discs have sharp edges!

Before transporting on public roads, the markers should be secured against accidental unfolding!

For this purpose, the following information is needed:
- the tractor's front wheel track;
- inter-row distance;
- the drill unit working width.

The length of the markers is calculated as in the example shown below.

In order to adjust the marker, lift up the blockade or pull out the locking pin and fold up the marker to its working position. Then, unscrew the bolts in the adjustable element! Through moving it along the rectangular profile, the calculated dimension is adjusted. While driving forward with the marker left down, its position should be checked.

A proper spacing is obtained, even for heavy soils, by placing the marker discs more or less diagonally.

When centre marking increase the marker length (M) by a half of the tractor's wheel track.

In case of hydraulically folding drill units, the markers should be folded down alternatively, using the monitor (see the 1502 monitor service manual)!

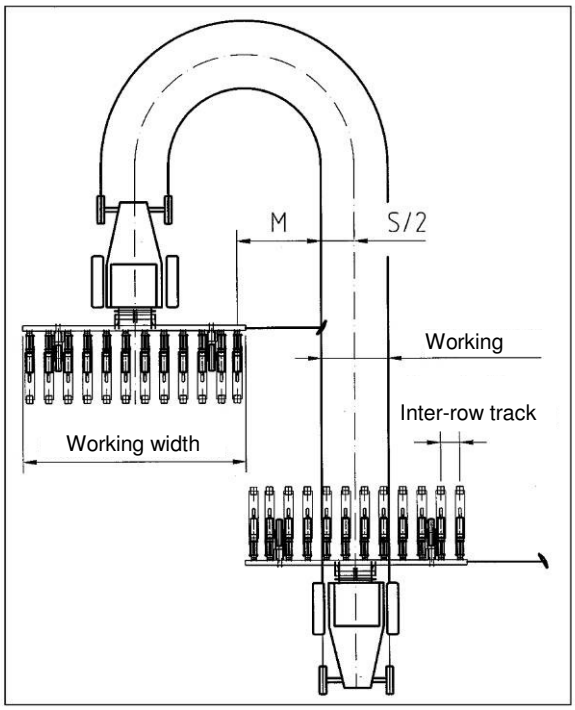

Fig. 27

Example:

Aeromat – 8-row
Inter-row distance 75 cm
Wheel track 180 cm

M= [(working width – wheel track) : 2]
+ inter-row distance

$$M = \frac{600-180}{2} + 75 = \textbf{285 cm}$$

Fig. 28a

Example:

Aeromat – 8-row
Inter-row distance 75 cm

M= [working width : 2] + Inter-row distance

$$M = \frac{600}{2} + 75 = \textbf{375 cm}$$

Fig. 28b

5. Settings

Wear appropriate ear protection!

When the drill unit is operated, the noise level can be above 70 dBA – e.g. 4-row Aeromat, with the pressure of 80 mbar generates the noise level up to 52 dBA

5.1. Adjusting the blower unit height

The blower unit is installed in the factory in a central position. However, please note that in case the end of the PTO shaft of the tractor is lowered, it is recommended that the blower unit should be placed a bit lower because otherwise too much strain is exerted on the articulated shaft. In such a case, the hydraulic hose between the blower and the pipe distributor should be possibly shortened.

Fig. 29

5.2. Tightening the blower driving belt and checking its tension

1. Air intake filter
2. Suction pipe
3. Outlet pipe
4. Blower
5. Multirib belt
6. Adjusting bolt
7. Tension bolt

Correct tension is crucial for the driving belt lifespan. Belt tension is to be checked when the drive is stopped only.

NOTE!
After tightening and checking the tension of the driving belt, the clamping screws and the countering nut of the tightening screw should be well tightened up! The driving belt should be inspected and, if need be, tightened, with the following time intervals: after 1 hour, 6 hours, 24 hours of operation, and then before the next season! From time to time, the filtering cyclone and the strainer in the suction pipe should be checked and cleaned. In case of drill units which were manufactured before 1998, in order to clean the strainer, one should disassemble the protecting canopy or the filtering cyclone.

After detaching it from a tractor, one should hang the PTO shaft on the chain of the upper rocker arm.

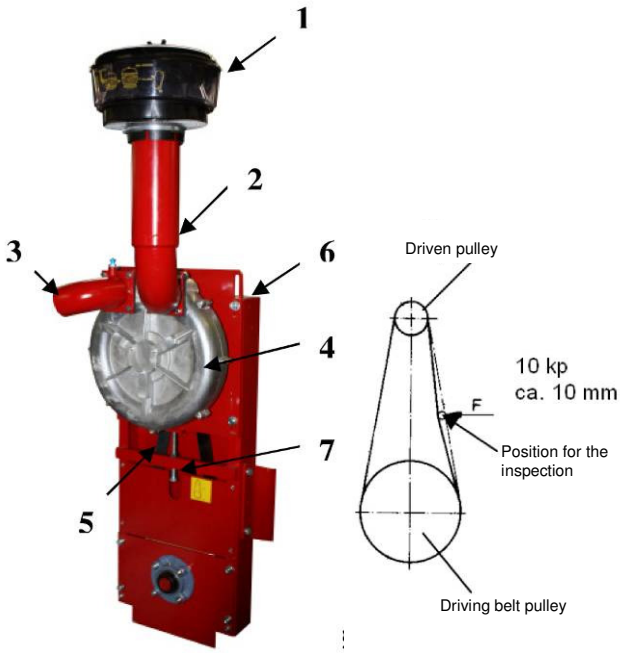

Fig. 30

Fig. 31

5.3. Setting the blower rotational speed

The 1/2" hydraulic hose (B) is necessary to supply oil to the fan. In its return circulation, the hose is mounted through a 3/4" quick coupling flexible hose (A) (see Figure 32). Oil must be supplied to the tractor in a non-pressure way, i.e. the return of the 3/4" pipe/quick coupling should be connected to the tractor's non-pressure pipe – if it is not present, one should have such a return pipe installed by an authorized supplier. To this pipe, the pipe which supplies oil from the drill unit to the tractor should be connected.

The hydraulically driven blower enables it to use the following hydraulic accessories of the tractor:

The blower requires up to 30 l/min with a pressure of about 125 bar. The tractor's hydraulic system must constantly provide 8 KW to ensure that the blower is operational.

In new tractors, oil supply can be adjusted by individual oil drains. The amount of oil is checked so that it is possible to keep a predetermined value of overpressure of 80 mbar on the pressure gauge.

In tractors where it is not possible to adjust the amount of oil by drains, the adjustment can be made by turning the switch (C) located at the amount adjusting valve on the blower console (see Fig. 33).

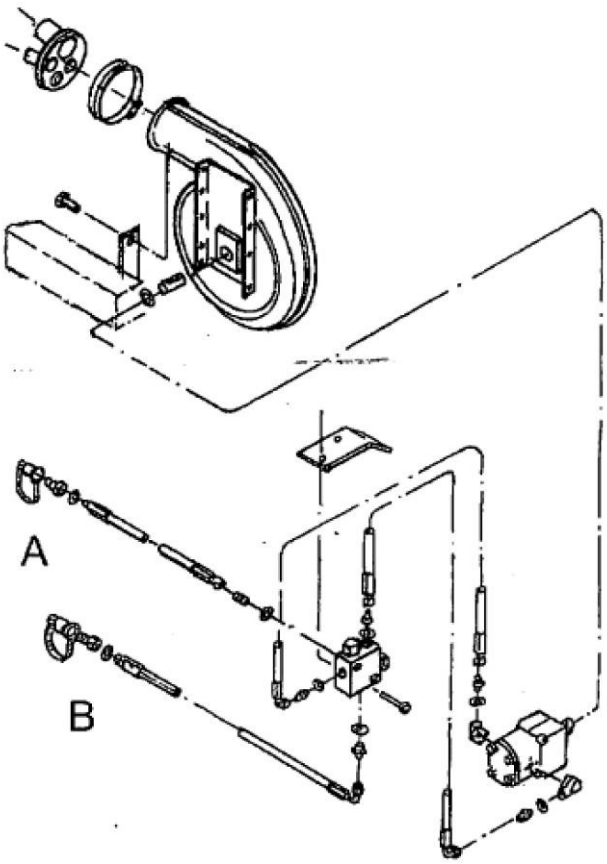

Fig. 32

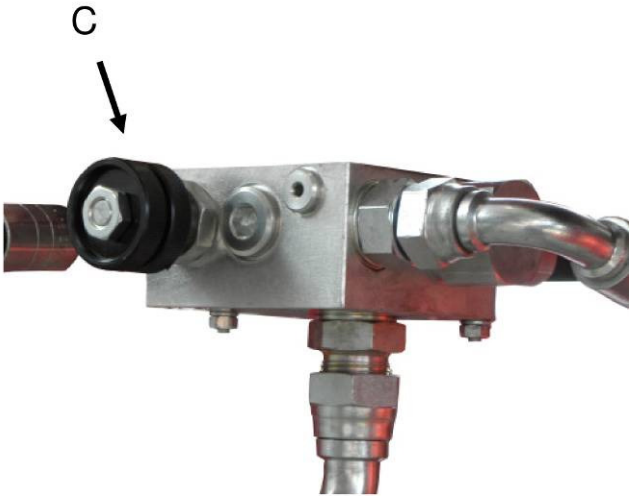

Fig. 33

5.4. Air pressure adjustment

The air pressure generated by the blower depends on the rotational speed of the tractor's PTO shaft. It is inadvisable to operate the blower with excessive rotational speed and air pressure values. Unnecessary strains, temperatures and noise should be avoided. The pressure on the manometer should not exceed 80 bar.
To ensure that seeds of various types and sizes is sown, the operation should be in accordance with the air pressure values show in Table No 2.

The air pressure values should be read on the manometer installed on the drill unit and be adjusted property.
When operating the Aeromat drill unit in the field, it is necessary that the tractor's engine works with its full rotational speed. The drive of the blower is designed in such a way that it is producing the required pressure already with the half of the speed value of the engine. It is advisable to drive with a constant position of the manual accelerator. One should avoid sudden changes of the engine speed with the use of the accelerator pedal, since they result in faster wear of the driving belt.

If with the speed of the engine necessary to pull the drill unit, the rotational speed of the blower and the air pressure are too high, one can release the excess air with the use of a regulator next to the air pipe.

Pay attention to the air pressure on the manometer!

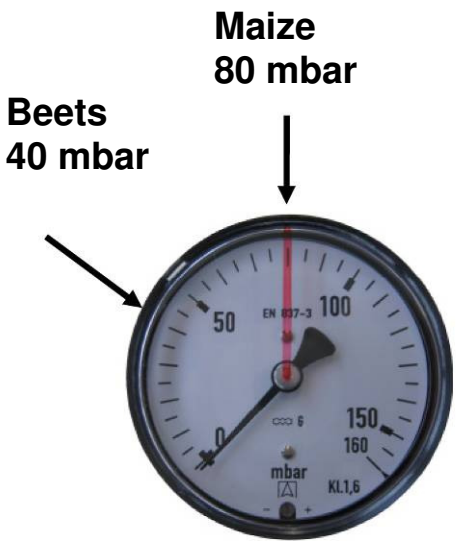

Fig. 34

Required speed of the PTO shaft:

- about 450 rpm in Aeromat 4-row drill unit;
- about 650 rpm in Aeromat 6-row drill unit;
- about 750 rpm in Aeromat 8-12-row drill unit.

- For the rotational speed of 450 rpm, the PTO shaft speed should be adjusted at 540 rpm;
- For the rotational speed of 650 rpm, the PTO shaft speed should be adjusted at 1,000 rpm;
- For the rotational speed of 750 rpm, the PTO shaft speed should be adjusted at 1,000 rpm.

Grain	Pack 45000 K Mass	Pack 50000 K Mass	Mass of 1,000 grains in 1 g	Air pressure in mbar	Bleeding 1/2/3/4	Slide damper settings	Drum with baffles	Ejector
Small maize	8.1 kg up to 13.5k g	9.0 kg do 15 kg	180 g up to 350 g	80	2	30	**M20** Order No 200072029	**M20** Order No 200072033
Large maize	13,5 kg do 18,9 kg	15 kg do 21 kg	350 g do 420 g	80	1	45		

Tab.2

5.5. Experimental values

Sowable material			Setting	
Name	Mass of 1000 grains in 1g	Form	Slide damper	Bleeding

5.6. Values obtained practically

Adjusting the slide damper on the sowable material tank
Lockable slide damper: OPEN – CLOSED
Before sowable material is poured in, the slide damper should be placed in position R for beet or M for maize.

Position: OPEN – R (30) for beet and small maize up to TKG (mass of 1 thousand grains) 350
When seeding beet and small maize, the pin should placed in the sowable material tank in the upper opening (R) (see Fig. 36), pull the slide damper entirely upwards and secure its position with the pin outside on the sowable material tank. (see Fig. 35).

Position: OPEN – M (45) large maize above TKG (mass of 1 thousand grains) 350
When seeding large maize, the pin should be placed in the sowable material tank in the bottom opening (M) (see Fig. 38), pull the slide damper entirely upwards and secure its position with the pin outside on the sowable material tank (see Fig. 37).

Position: CLOSED – T – transport
Place the pin in the upper opening (T) and pull the slide damper entirely downwards.
The slide damper must be closed when the drill unit is transported from one field to another. If the slide damper is not closed, the free compartment in the housing will be filled with sowable material, and this will lead to starting the drill unit again and damage to the main nozzle and problems with sowing.

The slide damper is adjusted in the factory, in case of combined maize/beet drill units, always in position R for beet and maize.
However, this position is not good for sowing beet and maize up to TKG (mass of 1 thousand grains) 350. Sowing maize with TKG above 350 should take place in position M (45).
In order to change position R to M, the pin in the sowable material tank should be placed in one hole deeper, so that a proper opining position is obtained.
A proper position of the slide damper can be also adjusted using the values from Table No 2 on page 23.

Emptying the remaining sowable material
In order to empty the remaining sowable material from the tank, one should loosen the butterfly nut on the emptying slide damper (see Fig. 41) and pull the damper upwards until it clicks. If the remaining sowing material is to be emptied to a proper tank, one should immediately close the damper – re-set it entirely to the lower position – and carefully tighten up the butterfly nut.

Fig . 35

Fig. 36

Fig. 37

Fig. 38

Fig. 39

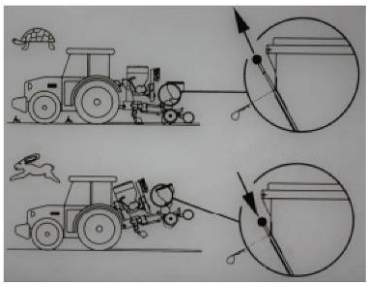
Fig. 40

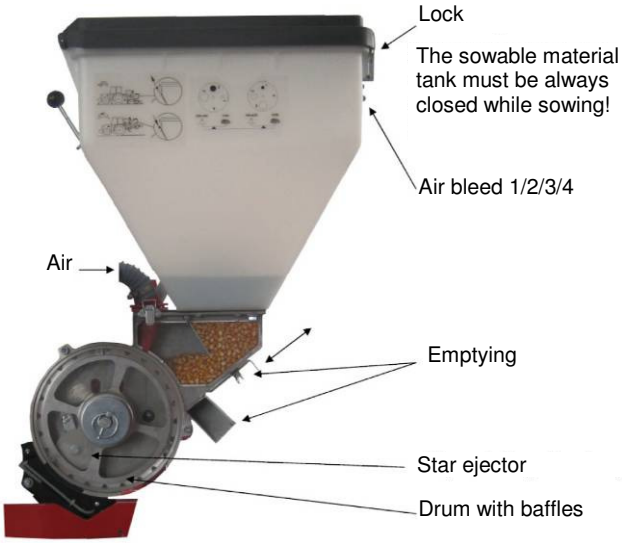

Fig. 41

5.7. Adjustment of the drill unit air bleed

Bleeding (positions 1/2/3/4)
Proper setting of bleeding is necessary to sow different types and sizes of material in the optimal way. The bleeding system is installed between the locks at the top of the sowable material tank (Fig. 41 page 26). If the TKG value of the sowable material is known, bleeding must be adjusted in accordance with the Table (Fig. 42)!

TKG 200 – 350 should be set to „2"
TKG 350 – 420 should be set to „1"

TKG – the mass 1 thousand grains– this weight is usually shown on packages.

This Table represents a determinant for a basic position of bleeding only, because the shape of grains also plays a role here (round – pointed – angular). That is why in case of assortments of sowable material characterized by boundary values, a correction of the setting is necessary.

If the drill unit is set for an adequate grain sowing distance (e.g. 14 cm), a proper number of grains per a hectare is displayed on the monitor (e.g. 95,240, see Table. 4 on page 32).
If the required number of grains is not obtained, then in case of too small number of grains, a correction of bleeding is needed through changing to a smaller hole (e.g. from 2 to 1). If too large number of grains per hectare is displaced, a correction of bleeding is required by changing to a bigger hole (e.g. from 2 to 3).

Double positions: opening of bleeding – bigger hole

Wrong positions: close further bleeding – smaller hole

Bleeding position: maize

If the total weight of a package is known, it is possible in case of 50,000 grains, through dividing by coefficient 50, and in case of 45,000 grains through dividing by coefficient 45, to determine a proper TKG value.

<u>For example:</u>

$$\text{Package} = \frac{15\,\text{kg x } 1{,}000}{50\,(45)} = 300 \text{ grams TKG}$$

At the beginning of work with a new maize assortment it is advisable to employ flat sowing in rows (on the soil surface) and check the sowing for individual rows.
One should make sure that the cover of the sowable material tank is always closed during the sowing process. Both covers must be closed!

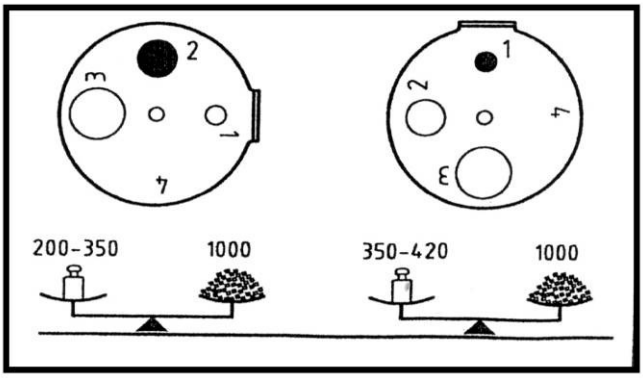

Fig. 42

5.8. Filling up the drill unit for sowing

Do not sow wet or sticky grain

While filling grain, make sure that there are no foreign objects (such as wires, wood, etc.).

It is inadvisable to go long distances on roads with grain in the tank or leaving grain in it overnight.
Beet seed should be poured into the tank up to 2/3 of its height only.

In the course of sowing in rows, the cover of the grain tank must be closed hermetically.

It appears from experience in the past that incrustation of sowable material must be done with special care. To prevent grains from getting glued together, one should keep the greatest possible slipperiness of grain. Incrustation of grains is to be made early enough (min. 1 day before planting), so that the grain is dry before sowing.

It is possible to improve the usefulness for moistening of the encrusted grain, adding about 200 grams of the talcum powder per 100 kg of sowable material.

The proportions of blending which are given by the manufacturer in the service manual must be observed.

Inspections

Examination of sowing and distances in a row between planted seeds is to be carried out during the first operation of the drill unit.
If the distances in a row between the grains sown are correct, one should make notes about the rotational speed (of the engine or the PTO shaft), air pressure setting, setting of the bleeding and of slide damper (e.g. engine speed $1{,}500^{-1}$, air pressure in 80 mbar, etc.).
In case there is a difference in the air pressure with the same rotational speed, one should necessarily check the distances between the grains sown in a row.
The test sowing is to be repeated in case the sowable material or the mass of 1,000 grains are changed.

Inspections of the nozzle

The blower is located over the cell wheel with internal blades and its role is to blow out excessive amounts of grain from the cells. In case one forgets to turn on the PTO shaft before starting the sowing – then the compressed air does not flow to the nozzle – grains projecting from the chamber would be cut at the nozzle edge. Crumbs of the grain resulting from this might form a deposit on the protective grid of the nozzle. One should always remove such crumbs, by opening the locks (Fig. 40) and removing the nozzle from the housing.

After a nozzle has been thoroughly cleaned, it should be carefully installed and secured by the locks.

Between the nozzle plate and the nozzle itself as well as between the nozzle and the housing sealing should be placed.
Before the beginning of each season, all the nozzles must be inspected, and defective ones replaced. (Fig. 28).

Fig. 43

Cross section of the nozzle

Fig. 44

6. Maintenance and repairs

6.1 Installing the cell wheels (seeding discs)

Item	Name
1	Lever
2	Ejector
3	Housing
4	Cell wheel
5	Plexiglass cover
6	Butterfly nut
7	Disc
8	Linch pin
9	Compression spring

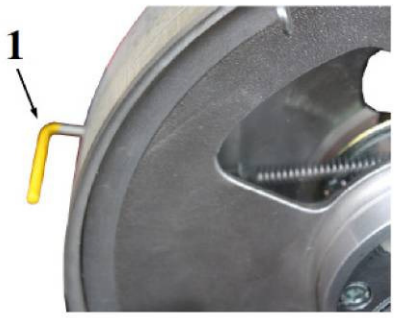

Fig. 45

For different assortments of sowable material, various cell wheels (discs) and ejectors are needed.
Cell wheels and ejectors are marked with letters (see Table No 3).

1. Place the drill unit with the use of the hydraulic system.
2. Empty the sowing material tank.
3. Unscrew and detach the ploughshare.
4. Loosen both butterfly nuts (6) and take off the plexiglass shield (5).
5. Press down the disc (7) to the spring (9) and take off the folding pin (8).
6. Now, it is possible to take off the disc (7) and the spring (9).
7. Press down the lever (1), so that the ejector (2) comes out off the cell wheel, and now it is possible to take out the cell wheel (4) from the housing (3).
8. While assembling, one should act in reverse order!

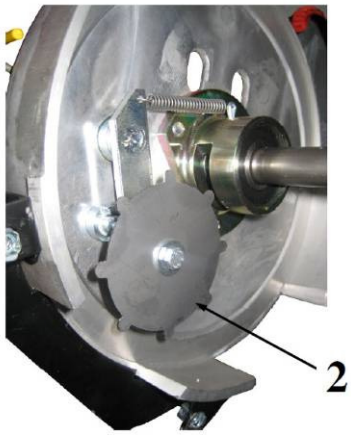

Fig. 46

Before installing, it is strongly recommended that the cell wheels is cleaned together with the housing walls located behind it.

Since in case of some assortments of sowable material from year to year, some differences in size and mass are happening, it is necessary to use the same calibration or, if necessary, install an appropriate cell wheel.

In order to determine proper cell wheels (e.g. for sunflower), it is necessary to make some tests using sowable material. In case of maize, all assortments of sowable material may be used with one cell wheel being employed.

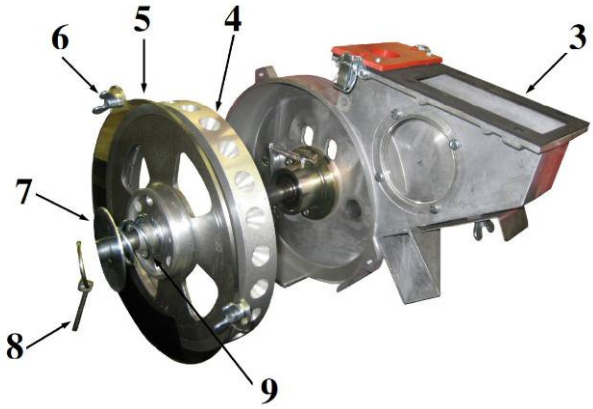

Fig. 47

Sowable material	Type of cell wheel	Part No	Ejector type	Part No
Maize	24 baffles M 20	200072029	M 20 star ejector	200242980
Beets	24 baffles M 20	200072373	R 20	200243938
Sunflower	24 baffles SB 20	200072375	SB 20	200244074
Soya	48 baffles S 20	200072662	R 20	200243938

Table 3

6.2. Adjustment of the sowing depth

1. Rear pressure roller
2. Adjusting spindle
3. Safety catch
4. Depth scale
5. Tandem rocker arm
6. Front tandem roller
7. Rear tandem roller
8. Drill opener furrow coverer
9. Crumbler roller
10. Air bleed
11. Grain slide damper
12. Spring tension
13. Disc drill opener
14. Grain down-pipe
15. Depth leading roller
16. Spindle
17. Solids rakes

AEROMAT S

Leading the depth is done with the use of the pressure roller (1). On the spindle (2), the depth of sowing is adjusted. The scale (4) helps set the devices in the same position. The drill opener furrow sweeps (8) should work flat close to the ground and its role is to cover the row with sown grains with loose soil. The action of the drill opener furrow sweeps (8) can be adjusted through spring-actuated pull rods.

AEROMAT R

In the Aeromat drill unit with a tandem lead, the depth of sowing is also adjusted by placing the spindle (2) in a proper position, and the front and rear tandem rolls (6 + 7) lift up the drilling set and at the same time they adjust the depth of the sowing drill opener.

In a tandem version, it is possible to regulate the working depth and the angle of position of the drill opener furrow sweeps (8). The depth limit prevents the sweeps from operating too deep when going from a hard soil to a lighter one. The crumbler roller located (9) at the end also enables it cover the grain evenly in case of different types of soils.

The working depth of the solids rakes (7) can also be adjusted by relocating the pins and the spring-actuated mechanism adapts itself to different conditions (to be adjusted about 1 cm above the ground level

AEROMAT DTE

Thanks to the leading rollers (15) and the two disc drill openers (13), it is possible between the rollers to work on uneven ploughed land. Minor undulations do not affect the sowing depth, since the drill set precisely adapts itself to the ground. The depth adjustment system adapts itself to the ground surface and it can be adjusted on the spindle (2). In order to increase the sowing depth, the spindle should be turned to the right-hand side, and to decrease it – to the left-hand side. The drill unit together with the drill sets can be lowered down only when the tractor is moving forwards. The depth setting for each row must be checked. In order to adjust the pressure rolls (1), the spindle (16) must be turned into a proper direction. When it is turned to the right-hand side, the pressure is increased, and when it is turned to the left-hand side – it is decreased. The pressure rollers cannot operate too deep as this would change the amount of sowing, especially during flat sowing.

Drill openers ‘Bubble’, ‘Coulter’ and one of a loosening type are optional for direct sowing!

AEROMAT S

Fig. 48

AEROMAT R

Fig. 49

AEROMAT DTE

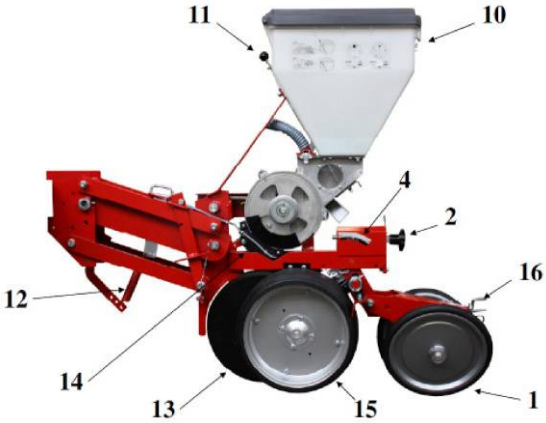

Fig. 50

6.3. Adjusting the drill unit from transport to working position

Attaching the set

Before transporting the drill unit, the drill units should be raised. To this end, the spring should be moved opposite to the direction of travel and the drill set raised. Then, the catch automatically clicks into place and keeps the drill set in a transport position. (Fig. 51). In case the drill set must be adjusted to its working position, the spring should be moved forward and the drill set slightly lifted up in order to unlock the catch (Fig. 52). Thanks to the adjusted stop in the upper part of the catch, the depth of the drill set position can be regulated.

1. Catch
2. Stop
3. Spring

Transport position: **Working position:**

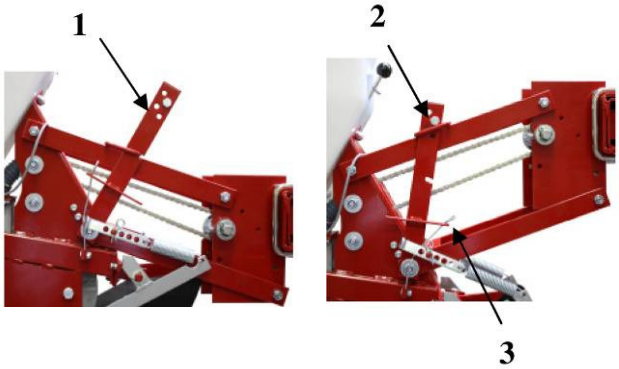

Fig. 51 Fig. 52

Sowable material slide damper

Air pressure in the preliminary chamber over the cell wheel enables it to supply only such amount of grain that will be received by the drum. If the drill unit was transported with a full grain tank, e.g. from a farm yard to a field, too much grain would slip down which would result in sowing double grains and the nozzles becoming blocked. That is why the sidle damper which is located at the front of the grain tank must be closed during transport. (Fig.53).

NOTE!
During transport, the slide damp must always be closed, or otherwise, the distributing chamber gets filled with grain. Then, there might be some problems with sowing on another field!

Transport position: **Slide damper closed**

Fig. 53

Working position: **Slide damper opened**

Fig. 54

6.4. Overload clutch repair

The purpose of the overload clutch (Fig. 55) is to prevent the driving belts from breaking or similar defects of the power transmission system. These may happen because of the presence of foreign matters in grain, e.g. nails or stones which seize between the cell wheel and the housing. In case of such a disruption, the overload clutch works in such a way that two shearbolts break. Then, one should remove the foreign matter and replace the two bolts in the overload clutch.

Only genuine shearbolts must be used. Non-genuine shearbolts will not guarantee correct operation of the overload clutch.

Overload clutch

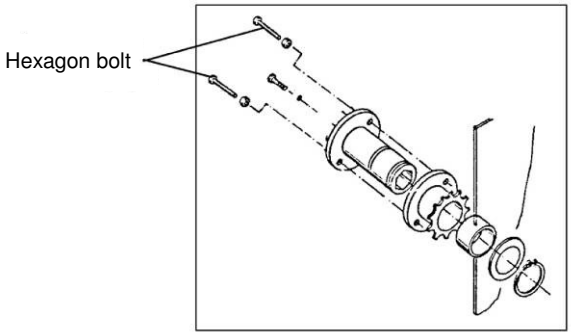

Fig. 55

6.5. Determining the distances of planting seeds

In Table No 36 below, the distance between seeds in a row can be calculated on the basis of 'the number of grains per hectare. The conversion factor for 'Seeds per square meter' is 10,000.
(four decimal places to be crossed out!)

Example:

Input data: Plants per square meter or 90,000 plants per hectare

and: width of inter-rows 75 cm

From the Table: 8.89 plants per square meter 88,900 plants per hectare

Result: with the width of inter-rows of 75 cm the distance in a row between seeds is 15 cm and 66.6 grains per 10 meters of the row length (6.66 grains per 0 metre length of a row)

Distribution Table

Inter-row distances							
37.5cm	45 cm	50 cm	75 cm	75 cm	80 cm	Seeds per 10 m	Distance between seeds in a row (cm)
74.080	61.730	55.560	39.680	37.040	34.720	28	36
78.440	65.360	58.800	42.010	39.220	36.770	29	34
83.340	69.443	62.500	44.640	41.670	39.770	31	32
88.880	74.060	66.600	47.620	44.440	41.670	33	30
95.240	79.370	71.400	51.020	47.620	44.620	36	28
10.2560	85.460	76.900	0 48.0	51.280	48.080	38	26
111.120	92.590	83.000	59.520	55.560	52.090	42	24
113.640	100.990	91.000	60.600	6.820	56.820	45	22
119.060	105.810	95.00	59.530	63.500	59.530	48	21
133.340	111.100	100.000	71.430	66.670	62.500	50	20
140.400	116.940	105.000	75.200	70.200	65.800	53	19
	123.465	111.000	79.370	74.080	69.450	56	18
	130.710	118.000	84.030	73.530	73.530	59	17
	138.870	125.000	89.290	83.330	78.130	63	16
		133.000	95.240	**88.900**	83.340	**67**	15
		143.000	102.040	95.240	89.300	71	14
			109.900	102.560	96.150	77	13
			119.000	111.040	104.130	83	12
			129.870	121.210	113.640	91	11
				133.330	125.000	100	10
				148.130	138.880	111	9
				166.670	156.250	125	8
Seeds per hectare							

Table 4

6.6. Setting the driving speed

The rate of travel while sowing depends to a large extent on the distance between seeds adapted.

Larger distance between seeds – a high driving speed.
Smaller distance between seeds– a low driving speed.

Table No 4 below shows possible driving speed values for individual distances between seeds.

Example:

Distance between seeds = 16 cm
Seedwheel with 24 chambers
Driving speed = 8 km/h

However, the driving speed from 8 to 10 km/h should not be exceeded because otherwise the turning of grain in a sowing furrow is too clear.
As the turning of grain in a sowing furrow can be different in various types of soils as well as the wear and tear of the points of drill openers, the accuracy of sowing is to be checked by uncovering the seeds which have been sown.

Table of driving speeds

Seed spacing [cm]	Seedwheel Maize	Seedwheel Horse bean	Seedwheel Sunflower	Seedwheel Beet
5		4		
6		4-5		
7		5-6		
8	5	6		5
9	5	7		5-6
10	6	8		6
12	7	8		7
14	8	8		7
16	8	8		8
18	9	8	5	8
20	10	8	6	8
22	10	8	7	8
24	10	8	7-8	8
26	10	8	8	8
28	10	8	9	8
30	10	8	9	8
Sowing speeds in w km/h				

Table 5

6.7. Adjusting the sowing distance

In order to adjust a proper steering position, the adjusting element which lifts up the roller chain should be shifted towards the driving wheel (see Fig. 39). Now, with the use of the adjusting lever, the whole unit can be shifted, however, this to be done carefully so that the unit is not jammed or bent.

This is why the hexagonal rollers in the transmission gear must be always well lubricated.

On the left-hand side of the wheel arm, the chain wheels, as a rule, do not need replacement. However, if it is necessary, they must be replaced at each drive wheel of the drill unit.

After replacement of the chain wheel, on the right hand side of the wheel arm, it is possible to adjust further distances between seeds in a row (see the Table of transmission gear ratios – Tables 6 and 7).

The side shield can be removed without using any tools.

After a chain wheel has been replaced, the chain should be checked for its position and tension.

Check the seed spacing!

Fig. 53

Table of transmission gear ratios – tyres 5.00 - 15

Zellenrad mit / Seedwheel with / Roue avec / Distributore							Zellen / holes / alveole / alveoli		5.00-15
24									
blageabstand / Distancias de siembra / Sowing distances / Distances de semis									
	14.5	13.7	13.0	12.2	11.5	11.0	23	18	
	18.5	17.5	16.5	15.5	14.8	14.0	18	18	
	24.0	22.5	21.0	20.0	19.0	18.0	18	23	
	33.0	31.0	29.0	27.5	26.0	24.5	13	23	
Zellenrad mit / Seedwheel with / Roue avec / Distributore							Zellen / holes / alveole / alveoli		5.00-15
36									
Ablageabstand / Distancias de siembra / Sowing distances / Distances de semis									
	7.5	7.0	6.6	6.3	6.0	5.5	30	18	
	9.5	9.0	8.5	8.0	7.6	7.2	30	23	
	12.5	11.7	11.0	10.5	10.0	9.3	18	18	
	16.0	15.0	14.1	13.3	12.6	12.0	18	23	
	22.0	20.6	19.5	18.5	17.5	16.5	13	23	
Zellenrad mit / Seedwheel with / Roue avec / Distributore							Zellen / holes / alveole / alveoli		5.00-15
96									
Ablageabstand / Distancias de siembra / Sowing distances / Distances de semis									
	3.7	3.5	3.2	3.0	2.9	2.7	23	18	
	5.1	4.8	4.5	4.2	4.0	3.8	17	18	
	7.5	7.2	6.8	6.4	6.0	5.7	14	23	

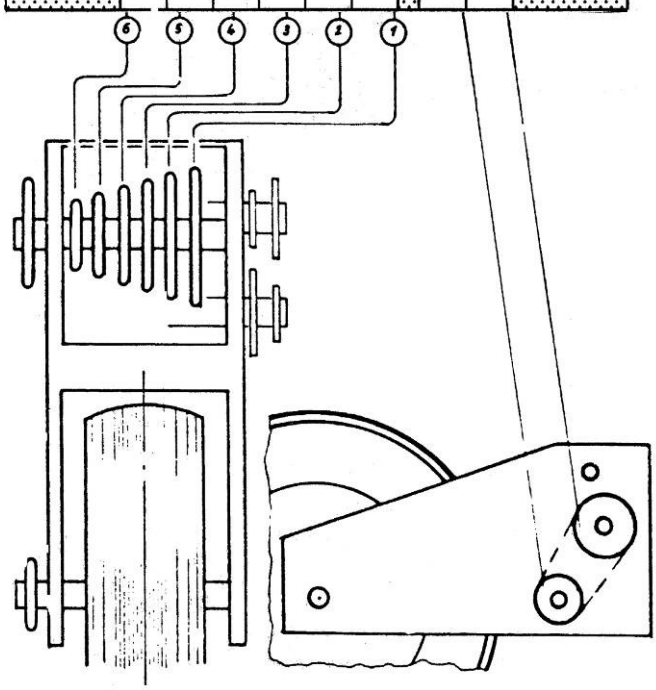

Table 6

Table of transmission gear ratios – tyres 7.50 - 15

Zellenrad mit / Seedwheel with / Roue avec / Distributore	24	Zellen / holes / alveole / alveoli	7.50-15

Ablageabstand / Distancias de siembra / Sowing distances / Distances de semis											
13.5	12.5	11.8	11.0	10.5	10.0	9.5	8.8	8.5	8.0	23	18
17.5	16.0	15.0	14.0	13.5	12.5	12.0	11.5	10.8	10.0	18	18
22.0	20.5	19.0	18.0	17.0	16.0	15.0	14.5	13.8	13.0	18	23
28.5	26.5	24.5	23.0	21.5	20.5	19.5	18.5	17.5	16.5	14	23

Zellenrad mit / Seedwheel with / Roue avec / Distributore	36	Zellen / holes / alveole / alveoli	7.50-15

Ablageabstand / Distancias de siembra / Sowing distances / Distances de semis											
6.9	6.4	6.0	5.6	5.3	5.0	4.7	4.5	4.3	4.1	30	18
9.0	8.4	7.8	7.3	7.0	6.5	6.2	5.8	5.7	5.5	23	18
14.8	13.7	12.8	12.0	11.3	10.6	10.0	9.6	9.2	8.7	18	23
19.0	17.5	16.5	15.5	14.5	13.5	13.0	12.4	11.7	11.0	14	23

Zellenrad mit / Seedwheel with / Roue avec / Distributore	48	Zellen / holes / alveole / alveoli	7.50-15

Ablageabstand / Distancias de siembra / Sowing distances / Distances de semis											
5.2	4.8	4.5	4.2	4.0	3.8	3.6	3.4	3.2	3.0	30	18
6.8	6.4	6.0	5.5	5.0	4.8	4.6	4.4	4.2	4.0	23	18
11.0	10.3	9.6	9.0	8.5	8.0	7.6	7.3	7.0	6.6	18	23
18.5	17.3	16.1	15.0	14.2	13.4	12.7	12.0	11.5	10.8	14	30

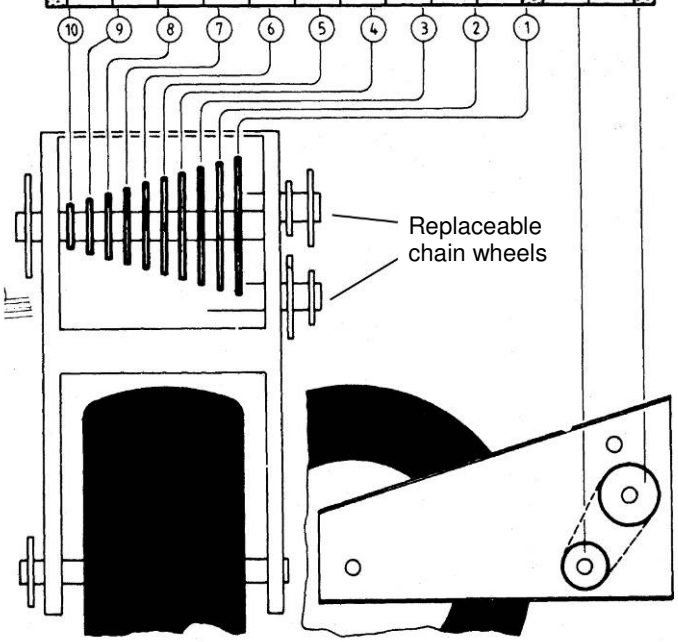

Table 7

6.8. Central fertilizer distributor

1. **Bottom flaps** (Fig. 56): the adjustment of sowing amount with the use of the lever of the bottom flap is not possible.
   - position 0, bottoms flaps closed;
   - position 2, it is a normal position for sowing fertilizer;
   - position 8, and higher ones, for the purpose of emptying and cleaning.

Adjusting the bottom flap

Fig. 56

2. **Cut-off dampers** (Fig. 57):
   - 1 = fully open;
   - 2 = half-open;
   - 3 = closed;

   Position 1 = fully open, a normal position for sowing fertilizers.

Adjusting the cut-off dampers

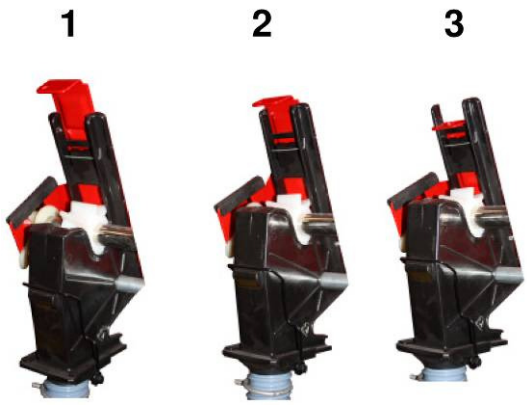

Fig. 57

3. **Amount of fertilizer** (Fig. 58):
   The amount of fertilizer is adjusted through the transmission gear.
   The scale has a control range from 0 to 80, the amount to be sown is higher with higher numbers selected on the scale.

Adjusting the transmission gear

Fig. 58

Transmission gear (Oil HPL46-NUTO H 68 Esso)

Fig. 59

Test sowing

In case of various types of fertilizers, the amount of fertilizer may differ from that shown in the Table below. The final amount of the fertilizer to be sown is determined by a test sowing.

The section of a 10-meter row equals to:

- 33 rotations of the crank in the fertilizer transmission gear;
- 4 1/3 rotations of a 7.5-15 drive wheel;
- 5 rotations of a 5.00-15 drive wheel;
- 5 rotations of a Terra 26-12 tyre.

The amount of fertilizer discharge in one row is to be compared with the value in the Table and possibly corrected.

Do not sow wet fertilizer!
Inspect how the fertilizer is sown in each row!

Example:

The Aeromat drill unit has the inter-row distance of 75 cm, and 150 kg of fertilizer per hectare is to be sown. It appears from Table 8, that the transmission gear must be set to 24!

Setting the amount of fertilizer

Setting the amount of fertilizer

Fertilizer quantity kg/ ha	Inter-row distance in cm				
	37,5	40	50	**75**	80
80		5	6	**11**	12
90		6	8	**14**	15
100	5	8	10	**16**	17
150	10	13	21	**24**	25
200	15	19	26	**31**	33
250	20	24	35	**39**	41
300	24	28	31	**45**	48
350	27	33	36	**52**	54
400	32	37	41	**57**	59
450	35	42	44	**62**	65
500	38	45	49	**69**	72
550	42	49	53	**74**	78
600	45	53	57	**80**	-
	Transmission gear setting - position.				

Control of the setting

Transmission gear setting	Fertilizer quantity in grams/ 10 meters
5	35
10	55
15	74
20	95
25	122
30	145
35	170
40	200
45	230
50	255
55	290
60	330
65	360
70	390
75	430
80	450

200062842

7.50-15 tyres	10 m = 4 1/3 rotations of the wheel
	10 m = 33 rotations of the crank

Table 8

6.9. Description of the filling auger

Before any maintenance work is done, the hydraulic system must be disconnected! In case it is necessary to disassemble the protective shields for the time of repair or maintenance operations, they should be assembled again before the drill unit is started! Maximum pressure in the hydraulic system is 175 bar.

In order to fill up the central fertilizer distributor quickly, it can be equipped with a filling auger.
The filling auger is powered through the tractor's hydraulic system and which can be switched on/off by an additional tap (1).
The filling auger is a useful tool which helps save labour while loading or reloading bulk fertilizer.
In this design, focus was on low weight and high wear resistance. A hydraulic motor powered by the tractor's hydraulic system is used in the power transmission system.

Length:	2,200 [mm]
Overall length:	2,700 [mm]
Diameter:	150 [mm], PVC pipe
Drive:	Hydraulic motor
Mass:	53 [kg]
Return:	High-pressure hose, length: 3,700 mm
Power supply:	High-pressure hose, length: 3,500 mm
Terminals:	SVK pin with a cap

The upper part and the bottom of the filling auger can be opened with a single movement of the hand, and the whole unit easily dismantled to be cleaned.

Efficiency, see Table 9

Filling auger Fig. 60

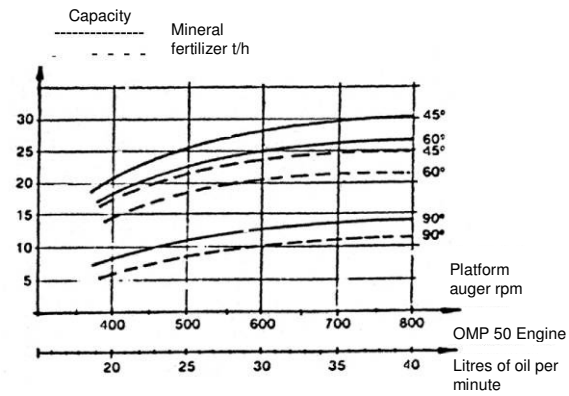

Table 9

6.10. Maintenance

One must obey the industrial safety regulations!
Park the drill unit on stable ground only, and before any maintenance operation uncouple it and lower it down to the ground!
In case it is necessary to dismantle any protective guards before repair or maintenance work, they must be definitely re-assembled before the drill unit is started again. The chains and driving belts can be tightened only after the drill unit is immobilized!

Before the season, the entire drill unit must be greased!
Each tandem wheel has a lubricating nipple (1 + 2), grease on a daily basis depending on the intensity of operation per hectare!
The articulated joints of the drill unit flaps (3) are to be lubricated before the start of a season only!

Fig. 61

While turning the drive wheels – the drive of the bottom, one can check the drill unit for its easy operation and functioning (without sowable material). Check the air pressure in the tyres, and pump up to the right pressure level if necessary.

Air pressure – ground wheel 7.50-15 = 2,5 - 2,75 bar;
Air pressure – ground wheel 5.00 - 15 = 2 – 2,25 bar;
Air pressure – ground wheel 26 x 12.00-12 = 2,5 – 2,75 bar;
Air pressure – ground wheel 29 x 12.50-15 = 2,5 – 2,75 bar;
Air pressure – transport wheel – see the transport trailer at the bottom of page 20.

At the end of each drilling season, the whole drill unit should be carefully cleaned, the grain tanks emptied, and remaining grain removed from the drum chamber by turning the drive wheel!
Similarly, the fertilizer tank and the filling auger should be emptied and cleaned.
All the ball bearings and slide bearings should be greased.
Possible damage to the paint should be repaired and complete maintenance operation of the drill unit carried out.

6.11. Troubleshooting

Problem	Reason	Solution
A Proper air pressure is not obtained	1. Filtering cyclone is filled with dust. 2. Suction pipe strainer clogged up. 3. Driving belt is slipping. 4. Broken manometer. 5. Loss of compressed air.	1. Empty and clean the filtering cyclone. 2. Remove and clean the strainer. 3. Tighten the belt in accordance with the instruction. 4. Replace the manometer. 5. Make sure hoses are properly connected or set the adjusting screw to a proper position.
B No sowing action (monitor)	1. Glued grain, dirty seedwheel drum. 2. Loose seed hopper cover. 3. Clogged up nozzle. 4. Dirty photooptical sensor 5. Wrong setting of air bleeding.	1. Clean the chambers of the seedwheel drum; use perfectly incrusted (seed coating) grain only. 2. Straighten the cover and thoroughly check it for leaktightness. 3. Clean the nozzle and carefully install together with sealing on the housing. 4. Clean the photooptical sensor. 5. Reduce the bleeding a little bit more (a smaller bleeding opening).
C Double grain is being sown	1. Too low air pressure. 2. Too high driving speed. 3. Clogged up nozzle. 4. Wrong setting of air bleeding.	1. Adjust the air pressure. 2. Follow the requirements of the Table of driving speeds. 3. Clean the nozzle and carefully install together with sealing on the housing. 4. Open the bleeding (a bigger bleeding hole).
D Uneven seed spacing	1. Too high driving speed. 2. Drive wheels slip since the fertilizer drill opener is adjusted deeper than the soil is tilled. 3. Drive wheels slip as only one wheel is loaded. 4. Worn out or clogged drill opener.	1. Follow the requirements of the Table of driving speeds. 2. Adjust the drill opener to a smaller depths or till the soil deeper. 3. Not the same length of the bars lifting the hydraulic systems of the tractor. 4. Replace or clean the drill opener.
E Seed spacing larger than those from the Table	Slipping of the drive wheel due to the type of soil.	It is possible to be compensated owing to the close gear ratios of our transmission gear. A shorter distance of sowing is to be chosen.

6.12. Maintenance intervals

One must obey the industrial safety regulations!
Park the drill unit on stable ground only, and before any maintenance operation uncouple it and lower it down to the ground!
In case it is necessary to dismantle any protective guards before repair or maintenance work, they must be definitely re-assembled before the drill unit is started again. The chains and driving belts can be tightened only after the drill unit is immobilized!

Maintenance	To be done by	Description, see page
After the first few hours of work		
Check and tighten up all bolts	Farmer	---
Before the season		
Grease the drill unit.	Farmer	39
Lubricate the chains with oil and check their tension.		
Check the drill openers and their points.		
Check the housing and chain wheels.	Farmer	39
Check the air bleeding system for its correct operation.		
Check pressure in the tyres.	Farmer	---
5.00-15 tyres = 2 bar / 29 PSI		
7.50-15 tyres = 2,5 bar / 36 PSI	Farmer	27
Check the hydraulic hoses!		
	Farmer	39
After the season		
Completely empty seed, fertilizer and remove any remains from the drill units.	Farmer	29
Protect electrical elements against moisture (store in a dry place).	Farmer	---
Clean and preserve the drill unit.	Farmer	39
Check the drill unit for possible defects and order spare parts if need be.	Farmer	---
Check the hydraulic hoses!	Farmer	---
After sowing on the area of 800 up to about 1,200 hectares		
Give the drill a thorough check-up and service..	Dealer	---
After 3 years up to maximum 5 years		
Replace the hydraulic hoses, working pressure maximum 175 bar	Farmer	---

6.13. A set: tractor and implement weight calculation

Before purchasing the drill unit, one should make sure that these conditions are satisfied by doing the following calculations or weighing a set: tractor and mounted implement.

Calculation of the total mass, loads of axles and load capacity of tyres and the minimal ballast required.

The following data are necessary for the calculation:

- TL [kg] mass of the tractor ready for travel (1);
- TV [kg] front axle load of the tractor ready for travel (1);
- TH [kg] rear axle load of the tractor ready for travel (1);
- G_H [kg] total mass of the equipment suspended at the rear/rear ballast (2);
- G_V [kg] total mass of the equipment suspended at the front/ front ballast (2);
- a [m] distance between the centre of gravity of the tool suspended at the front/front ballast and the centre of the front axle (2; 3);
- b [m] the tractor's wheel base (1; 3);
- c [m] distance between the centre of the rear axle and the centre of the ball catch of the lower lift arm (2);
- d [m] distance between the centre of the ball catch of the lower lift arm and the gravity centre of the tool suspended at the rear /rear ballast (2).

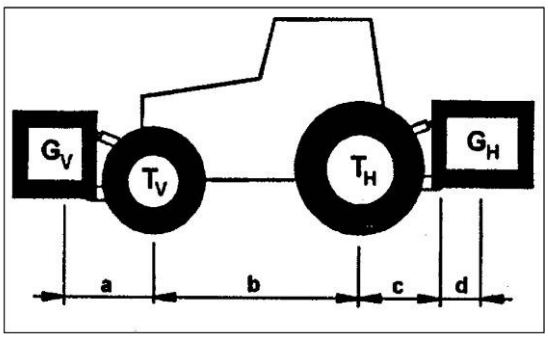

Fig. 47

(1) See the tractor's service manual;
(2) See the price list and/or the drill unit's service manual;
(3) To be measured.

Tool suspended at the rear or sets of tools suspended at the front – at the rear

1) Calculation of the minimal front ballast $G_{V\ min}$

$$G_{V\,\min} = \frac{G_H \cdot (c+d) - T_V \cdot b + 0{,}2 \cdot T_L \cdot b}{a+b}$$

The minimal ballast calculated which is necessary at the front of a tractor, should be entered into the Table on page 43.

Tool suspended at the front

2) Calculation of the minimal rear ballast $G_{H\ min}$

$$G_{H\,\min} = \frac{G_V \cdot a - T_H \cdot b + 0{,}45 \cdot T_L \cdot b}{b+c+d}$$

The minimal ballast calculated which is necessary at the rear of a tractor, should be entered into the Table on page 43.

3) Calculation of the real load of the front axle $T_{V\ tat}$

(When with a tool suspended at the front (G_V) the required minimal front ballast ($G_{V\ min}$) is not obtained, the mass of the tool suspended at the front should be increased up to the value of the minimal front ballast!).

$$T_{Vtat} = \frac{G_V \cdot (a+b) + T_V \cdot b - G_H \cdot (c+d)}{b}$$

The real and calculated authorised loads of the front axle should be entered into the Table on page 43. **Equipment suspended at the front and at the rear of the three-point hitch must not lead to the maximal authorized total weight, the authorized axle load and the tyre load capacity of a tractor to be exceeded. The front axle of a tractor must be always loaded with at least 20% of the tractor's deadweight.**

4) Calculation of the real total mass G_{tat}

(When with a tool suspended at the rear (G_H) the required minimal rear ballast ($G_{H\ min}$) is not obtained, the mass of the tool suspended at the rear should be increased up to the to the value of the minimal rear ballast!)

$$G_{tat} = G_V + T_L + G_H$$

The real total mass and that given in a tractor's service manual should be entered into the Table.

5) Calculation of the real load of the rear axle

The real load of the rear axle and that given in a tractor's service manual should be entered into the Table.

6) Load capacity of tyres

Double value (of two tyres) of the authorised load capacity of tyres should be entered into the Table (see the specification of the manufacturer of the tyres).

Table	Real value as calculated		Authorised value as per the service manual		Double authorised load capacity of (two) tyres
Minimal ballast front/ rear	kg		----------		----------
Total mass	kg	≤	kg		----------
Front axle load	kg	≤	kg	≤	kg
Rear axle load	kg	≤	kg	≤	kg

Table 12

The minimal ballast should be entered as a tool suspended or mass of ballast at the tractor!
The values calculated must be less/equal to (≤) to the values authorised!

6.14. Explanation of the Becker pictograms

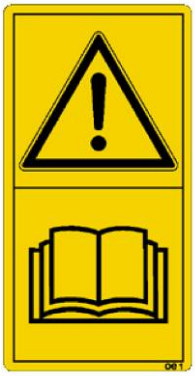	Catalogue - No 1 ISO 11684 No (-) Order No. Becker 200043774	Before starting the drill unit, study the service manual and tips on safety and follow them.
	Catalogue - No 6 ISO 11684 - No (C.2.10.) Order No Becker 200062365	While working do not stay within the zone of working connections.
	Catalogue - No 11 ISO 11684 - No (C.2.2.) Order No Becker 200062363	To come in the danger zone is not allowed until a safety device has been placed into the hydraulic device.
	Catalogue - No 14 ISO 11684 - No (C.2.21) Order No Becker 200083978	While working, do not dismantle the protective guards.

	Catalogue - No 20 ISO 11684 - No (C.2.35) Order No Becker 200083979	Do not put hands into the crush zone, where moving elements may be found.
	Catalogue - No 37 ISO 11684 - No (C.2.27) Order No Becker 200083976	Transporting people on the implement is forbidden.
	Catalogue - No 40 ISO 11684 - No (C.2.44) Order No Becker 200083988	Beware of hydraulic oil leaks. Follow the advice in the operators manual
	Catalogue - No 50 ISO 11684 - No (-) Order No Becker 200083977	It is forbidden to remain within the implement's zone of work.
	Catalogue - No. 52 ISO 11684 - No (-) Order No Becker 200062366	Before detaching from a tractor or before parking, put wedges under the wheels to prevent the drill from movement or slippage.

6.15. DECLARATION OF CONFORMITY

DECLARATION OF CONFORMITY

in accordance with the Directive WE 2006/42/WE

Company Becker-Landtechnik GmbH & Co. KG
Am Rottland 1

D-34399 Oberweser

declares hereby that this product

Aeromat

Single-grain drill

To which this Declaration refers fulfils the adequate, basic requirements concerning safety and health protection in accordance with the Directive WE 2006/42/WE.

In order to ensure that the requirements related to safety and health protection as referred to in this Directive WE are satisfied, the following technical standards and /or specifications have been employed:

DIN EN ISO 12100-1 and DIN EN ISO 12100-2.

Markus Brinkopp-Rode
Director

Oberweser, on the 1st day of March 2010

Date and place of issuing:

Name, position and signature of the person authorise

Becker-Landtechnik GmbH & Co.KG
Am Rottland 1
D-34399 Oberweser
Tel.: + 49(0) 5572-402 0
Fax: +49 (0) 5572-402 41
E-mail: mail@becker-lt.de
Internet: www.becker-lt.de

Issued 03/2010

Printed in:
Oberweser / Germany