KONGSKILDE

FRONT TERRA DISC

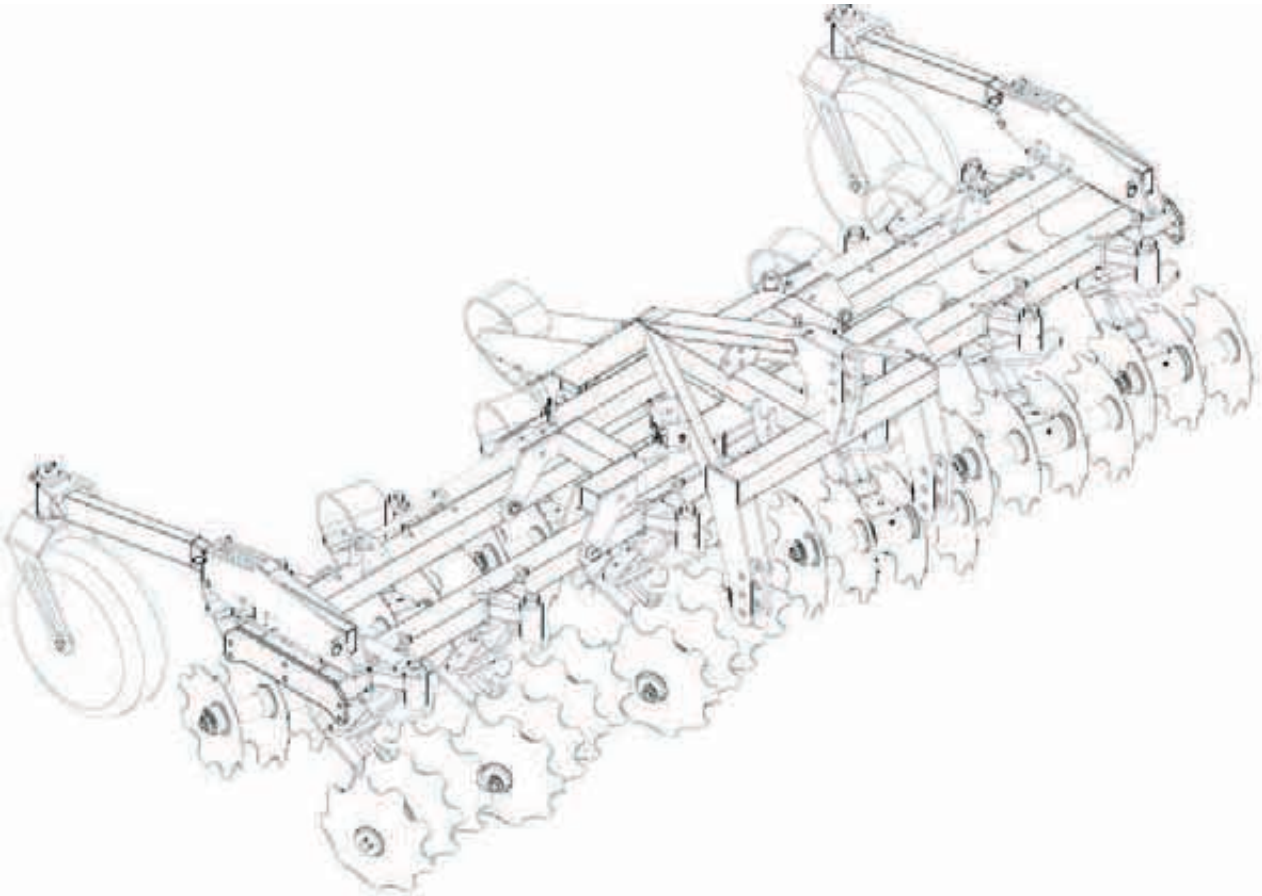

GB Spare parts list

Tab. 1

Version 3m

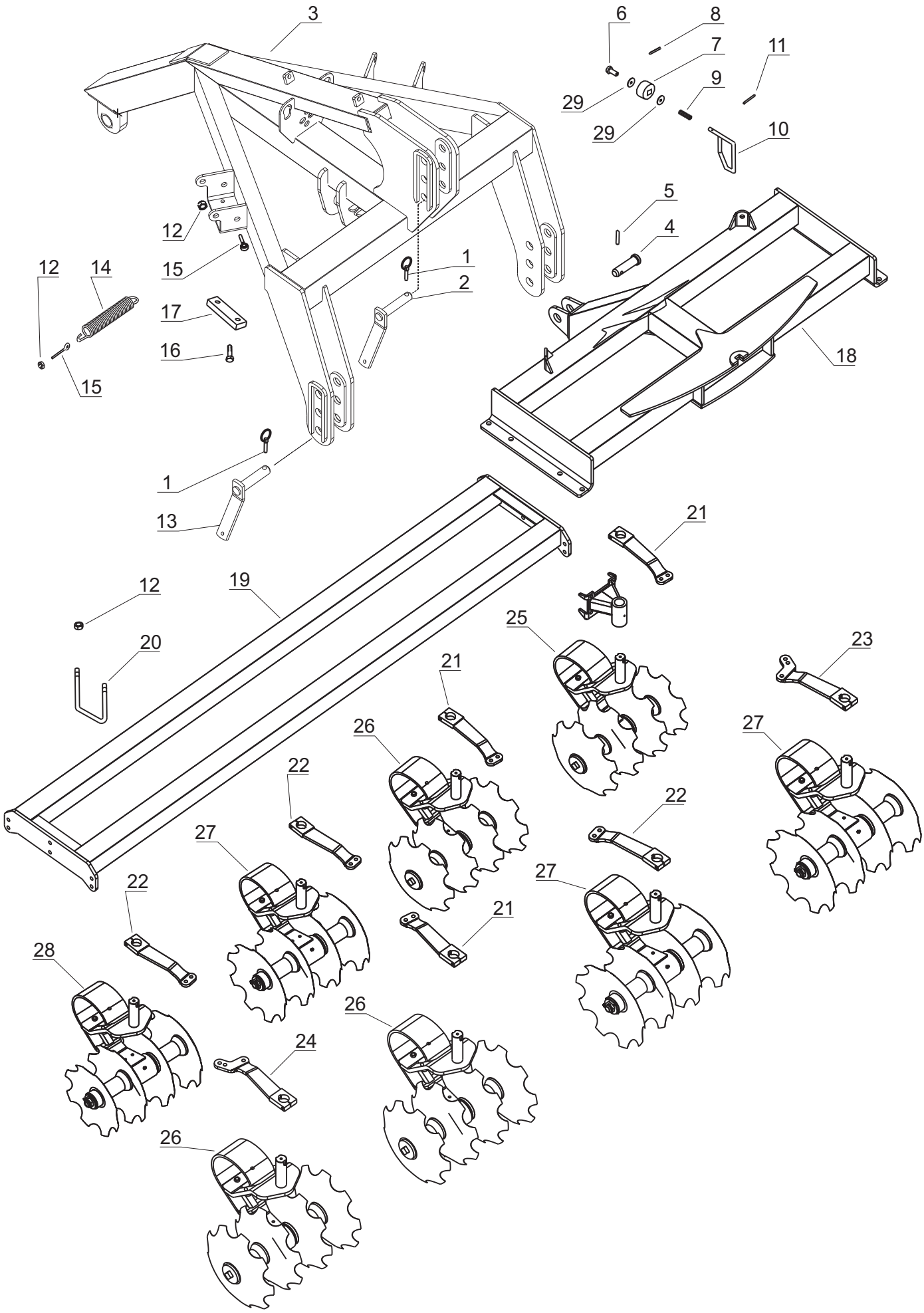

Tab. 1

Fig.	Serial no.	Part no.	Pieces	Notes	
1		300323046	3	Linch pin	
2		372179400	1	Socket pin	25x132
3		372179500	1		
4		7205302027	1		
5		300323010	1	Tension pin	10x50
6		7205303017	1		
7		7205302017	1		
8		300323039	1	Spring pin	8x50
9		7205302018	1		
10		7205302030	1		
11		300323020	1	Spring pin	5x36
12		300316023	18	Self locking nut	M16
13		372179300	2		
14		101019349	2		
15		300304261	4	Bolt	M16x60
16		300308021	4	Screw	M10x30 8.8
17		7205303013	2		
18		7205303017	1		
19		7201003003	1		
20		7202301005	4		
21		7201003231	3		
22		7201003232	3		
23		7201003270	1		
24		7201003269	1		
25		7201003220	1		
26		7201003222	3		
27		7201003223	3		
28		7201003221	1		
29		300332083	2	Washer 37	

Tab. 2

Version 4m; 4,5m

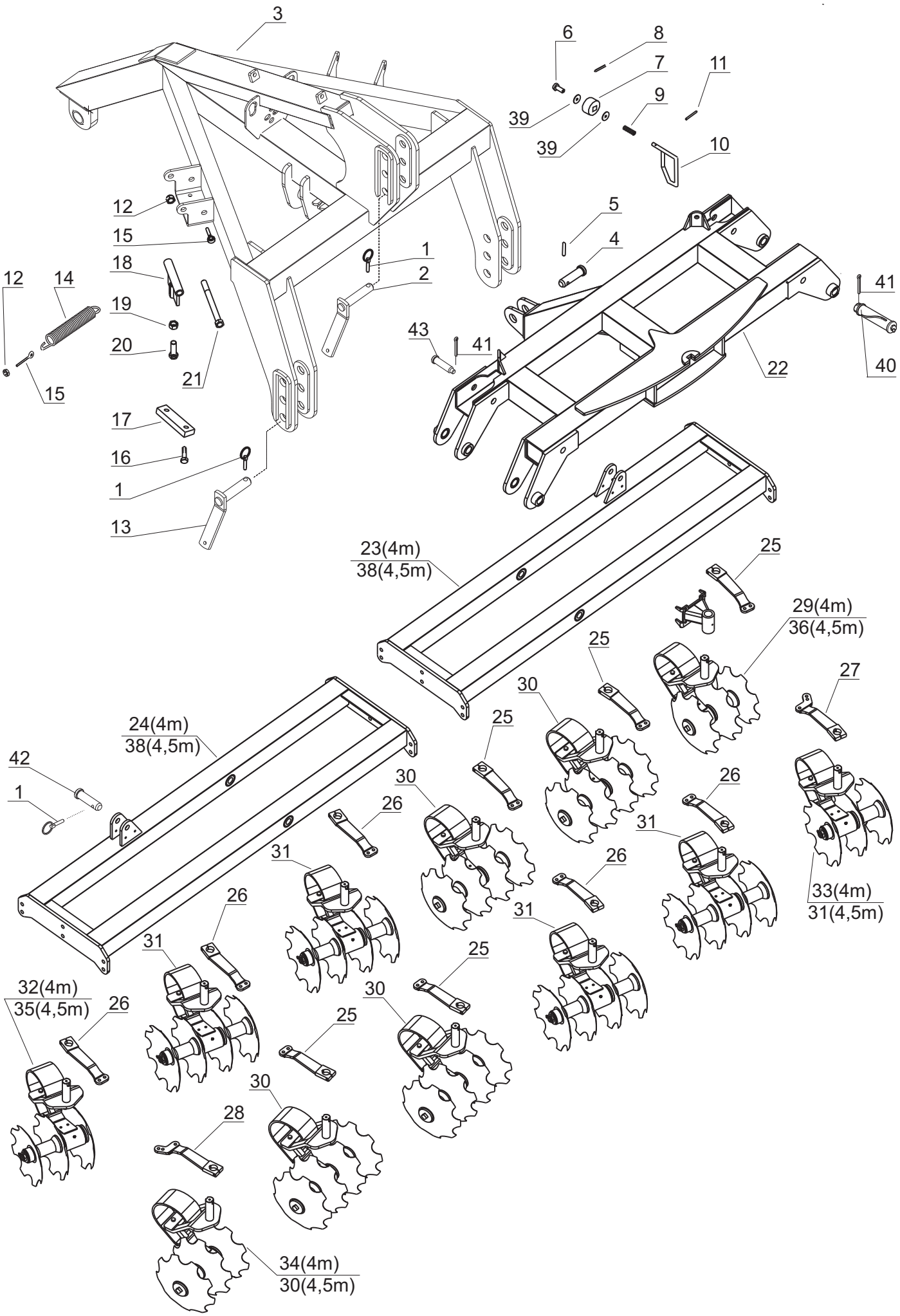

Tab. 2

Fig.	Serial no.	Part no.	Pieces	Notes	
1		300323046	5	Linch pin	
2		372179400	1	Socket pin	25x132
3		372179500	1		
4		7205302027	1		
5		300323010	1	Tension pin	10x50
6		7205303017	1		
7		7205302017	1		
8		300323039	1	Spring pin	8x50
9		7205302018	1		
10		7205302030	1		
11		300323020	1	Spring pin	5x36
12		300316023	4	Self locking nut	M16
13		372179300	2		
14		101019349	2		
15		300304261	4	Bolt	M16x60
16		300308021	4	Screw	M10x30 8.8
17		7205303013	2		
18		7201003026	2		
19		300315006	2	Nut	M16-8-B
20		300304094	2	Screw	M16x50 8.8
21		300304250	2	Bolt	M16x170
22		7205305011	1		
23		7201004005	1		
24		7201004004	1		
25		7201003231	5		
26		7201003232	5		
27		7201003270	1		
28		7201003269	1		
29		7201003225	1		
30		7201003222	4		
31		7201003223	4		
32		7201003224	1		
33		7201003227	1		
34		7201003226	1		
35		7201003221	1		
36		7201003220	1		
37		7201004504	1		
38		7201004505	1		
39		300332083	2	Washer 37	
40		7203302031	4	Spring pin with nut	30x157
41		300333060	6	Splin pin	4x45
42		300001938	2	Pin	25x122
43		300001957	2	Spring pin with nut	25x125

Tab. 3

Version 6m

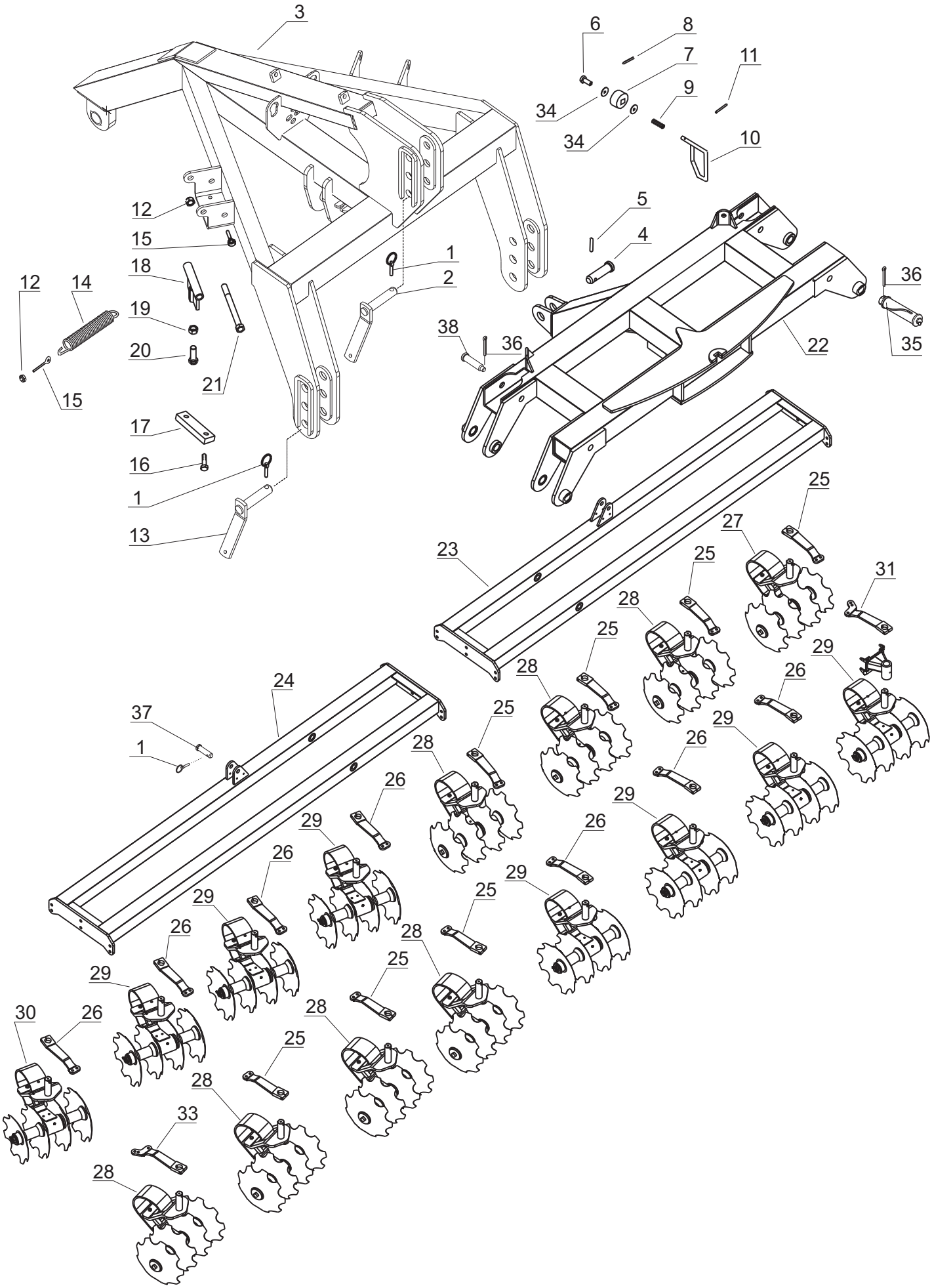

Tab. 3

Fig.	Serial no.	Part no.	Pieces	Notes	
1		300323046	3	Linch pin	
2		372179400	1	Socket pin	25x132
3		372179500	1		
4		7205302027	1		
5		300323010	1	Tension pin	10x50
6		7205303017	1		
7		7205302017	1		
8		300323039	1	Spring pin	8x5
9		7205302018	1		
10		7205302030	1		
11		300323020	1	Spring pin	5x36
12		300316023	4	Self locking nut	M16
13		372179300	2		
14		101019349	2		
15		300304261	4	Bolt	M16x60
16		300308021	4	Screw	M10x30 8.8
17		7205303013	2		
18		7201003026	2		
19		300315006	2	Nut	M16-8-B
20		300304094	2	Screw	M16x50 8.8
21		300304250	2	Bolt	M16x170
22		7205305011	1		
23		7201006005	1		
24		7201006004	1		
25		7201003231	7		
26		7201003232	7		
27		7201003220	1		
28		7201003222	7		
29		7201003223	7		
30		7201003221	1		
31		7201003270	1		
33		7201003269	1		
34		300332083	4	Washer 37	
35		7203302031	4	Spring pin with nut	30x157
36		300333060	6	Splin pin	4x45
37		300001938	2	Pin	25x122
38		300001957	2	Spring pin with nut	25x125

Tab. 4

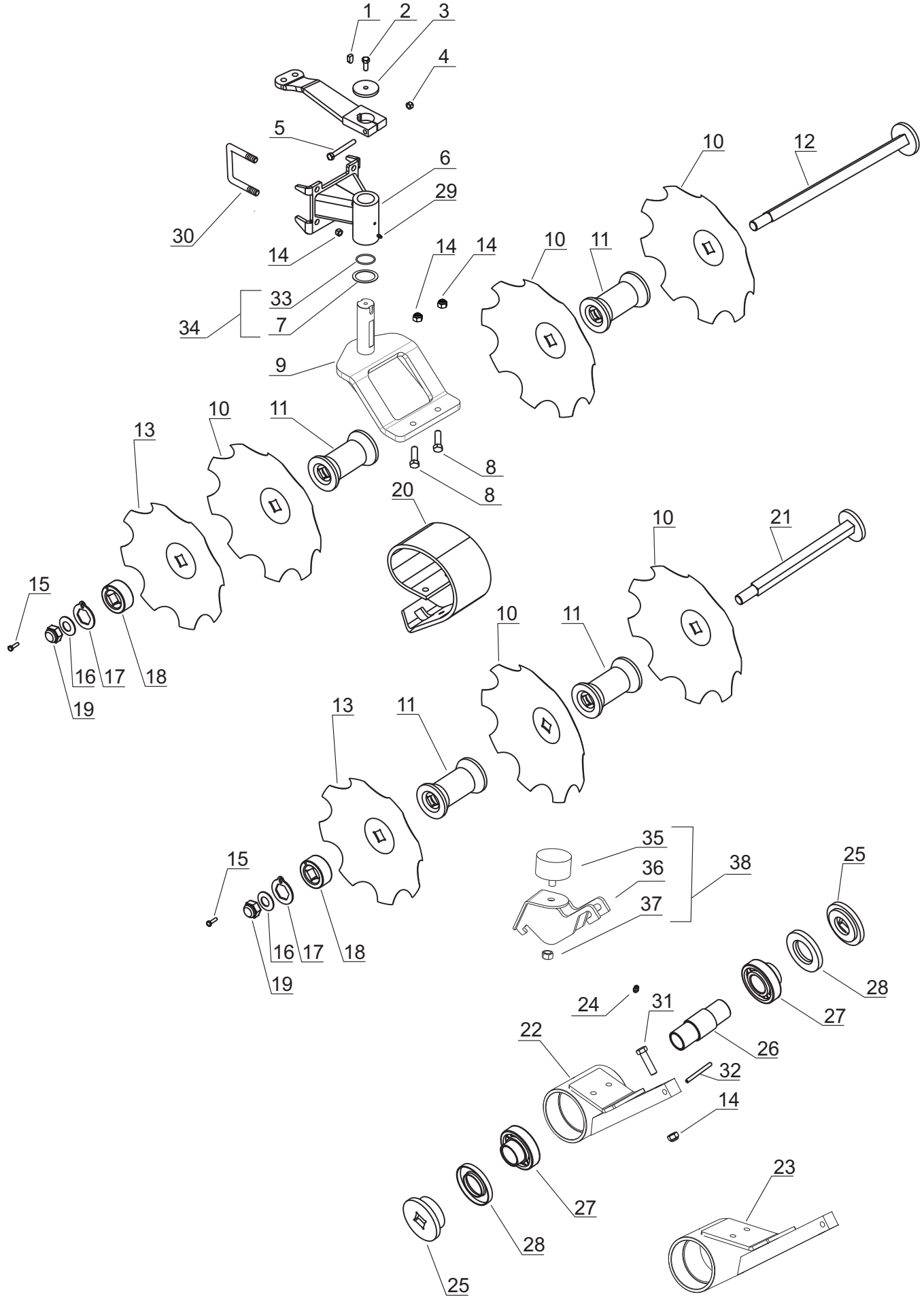
1
2
3
4
5
6
29
30
14
33
34
7
9
10
11
12
13
8
20
21
15
16
17
18
19
35
36
37
38
25
28
27
24
31
26
22
32
23

Tab. 4

Fig.	Serial no.	Part no.	Pieces	Notes	
1		7201003056	1		
2		300304056	1	Screw	M12x30 8.8
3		7201003077	1		
4		300316021	1	Self locking nut	M12-8-B
5		300304051	1	Bolt	M12x100
6		7201003204	1		
7		372005369	1	Washer	
8		71000652232	2	Bolt	M16x1,5x55 12.9 DIN931
9		372255700	1		
10		7201003209	4		461
11		7202302003	2		
12		7201003213	1	L=670	
13		7201003208	1		414
14		71307216385	3	Self locking nut	M16x1,5 10
15		300304155	1	Screw	M8x30 8.8
16		7202302007	1		
17		7202302005	1		
18		7202302006	1		
19		300316044	1	Self locking nut	M30x2
20		105150055	1		
21		7201003212	1	L=480	
22		7201003103	1		
23		7201003104	1		
24		300421009	1	Lubricating nipple	M10x1
25		7201003105	2		
26		7201003092	1		
27		7201003094	2		
28		7201003090	2		
29		300421006	1	Lubricating nipple	M8x1
30		7202301005	2		
31		71331116650	1	Bolt	M16x1,5x65 12.9 DIN931
32		300323106	1	Tension pin	12x65 DIN1481
33		7000405936	1	O-ring	50,4x3,5
34		7201003051	1	Kit O-ring 7000405936 + Washer 372005369	
35		300001531	1	Bumper	o60M12
36		372260800	1	Stopper welded	
37		300316021	1	Self locking nut	M12
38		372262800	1	Kit 300001531 + 372260800 + 300316021	

Tab. 5

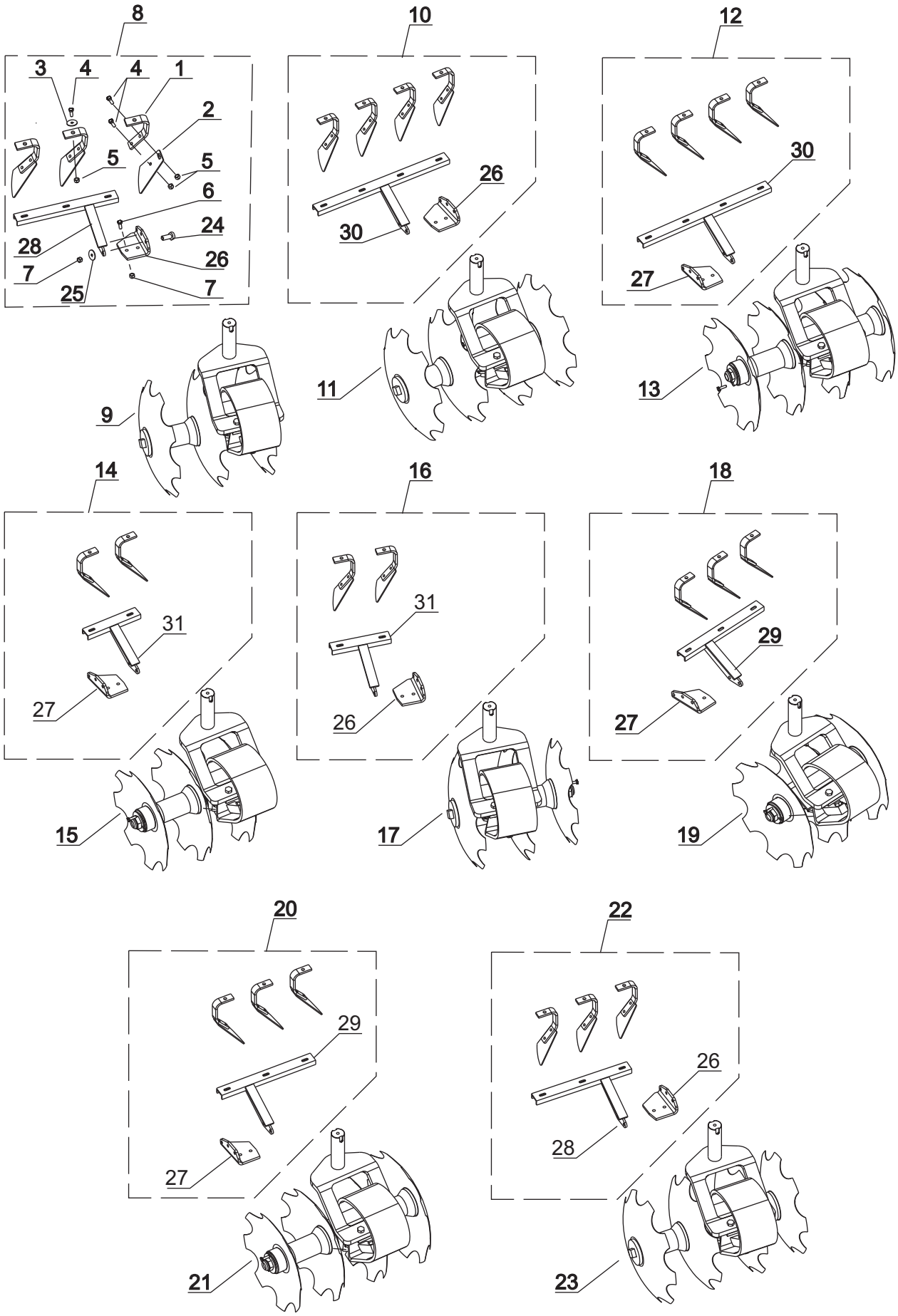
8
3
4
4
1
2
5
5
6
24
28
26
7
25
7
9
10
26
30
11
12
30
27
13
14
31
27
15
16
31
26
17
18
29
27
19
20
29
27
21
22
26
28
23

Tab. 5

Fig.	Serial no.	Part no.	Pieces	Notes
1		7201003301	1	
2		7201003300	1	
3		300332027	4/3	10 DIN 126
4		300304032	12/9	M10x25 DIN 933
5		300316020	12/9	M10 DIN 985
6		300304056	2	M12x30 DIN 933
7		300316021	4	M12 DIN 985
8		7201003314	1	
9		7201003227	1	
10		7201003310	1	
11		7201003223	1	
12		7201003311	1	
13		7201003222	1	
14		7201003316	1	
15		7201003225	1	
16		7201003313	1	
17		7201003224	1	
18		7201003315	1	
19		7201003226	1	
20		7201003311	1	
21		7201003220	1	
22		7201003310	1	
23		7201003221	1	
24		300304057	2	M12x35 DIN 933
25		300332008	2	12 DIN 126
26		7204005844	1	
27		7204005843	1	
28		7204005852	1	
29		7204005850	1	
30		7204005847	1	
31		7204005857	1	

Tab. 6

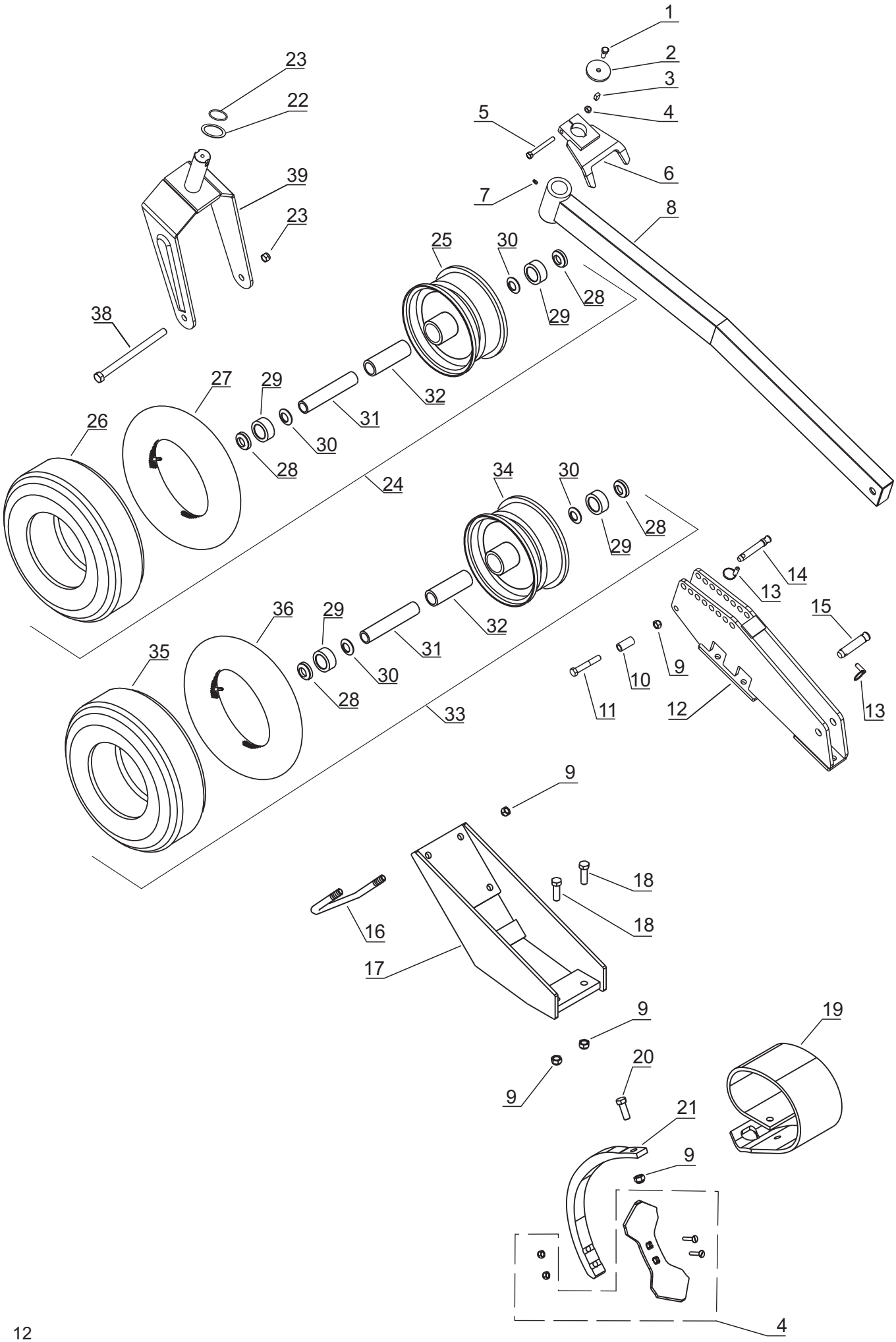
1
2
3
4
5
6
7
8
9
10
11
12
13
14
15
16
17
18
19
20
21
22
23
24
25
26
27
28
29
30
31
32
33
34
35
36
38
39

Tab. 6

Fig.	Serial no.	Part numer	Pieces	Notes	
1		300304056	1	Screw	M12x30 8.8
2		7201003077	1		
3		7201003056	1		
4		105000794	1	VF 11 cm rev. ultr-X. share w. Bolts	110x10
5		300304051	1		
6		7201003070	1		
7		300421006	1	Lubricating nipple	M8x1
8		7201003066			
9		300316023	8	Self locking nut	M16
10		7201003063	1		
11		300304077	1	Screw	M16x100 8.8
12		7201003071	1		
13		300323046	1	Linch pin	11x45
14		7201003057	1		
15		7201003058	1		
16		7202301005	2		
17		7201003044	1		
18		300304094	2	Screw	M16x50 8.8-B
19		105000002	1		
20		300304093	1	Screw	M16x45 8.8-B
21		105000128	1		
22		7201003051	1	Washer	
23		7000405936	1	O-ring	50,4x3,5
24		7201003085	2	Wheel GK kpl	6.75X14.5 4;4,5;6 m
25		372002809	1	Wheel GK	6.75X14.5 20X240 Silver
26		100423070	1	Tyre	24X8.00-14.5 ST-33 10PR TL K401A
27		100423071	1	Tube	200/60-14.5 Tr15
28		372002815	2	Oil seal	356210
29		300401020	2	Ballbearing	6206 2RS
30		372002814	2	Metal seal	35X2.5X15
31		372002813	1	Inner tube	35X4.5X240
32		372002812	1	Distance tube	35X2.0X178.2
33		7201003084	2	Wheel GK kpl	4.00X12 3 m
34		372002811	1	Wheel GK	4.00X12 20X240 Silver
35+36		100423039	2	Set	23X6.00-12 ST-33 6PR Tr13 DELI S319
37		7201003076	1		
38		7201003078	1		
39		300316016	1	Self locking nut	M20

Tab. 7

Version 3m

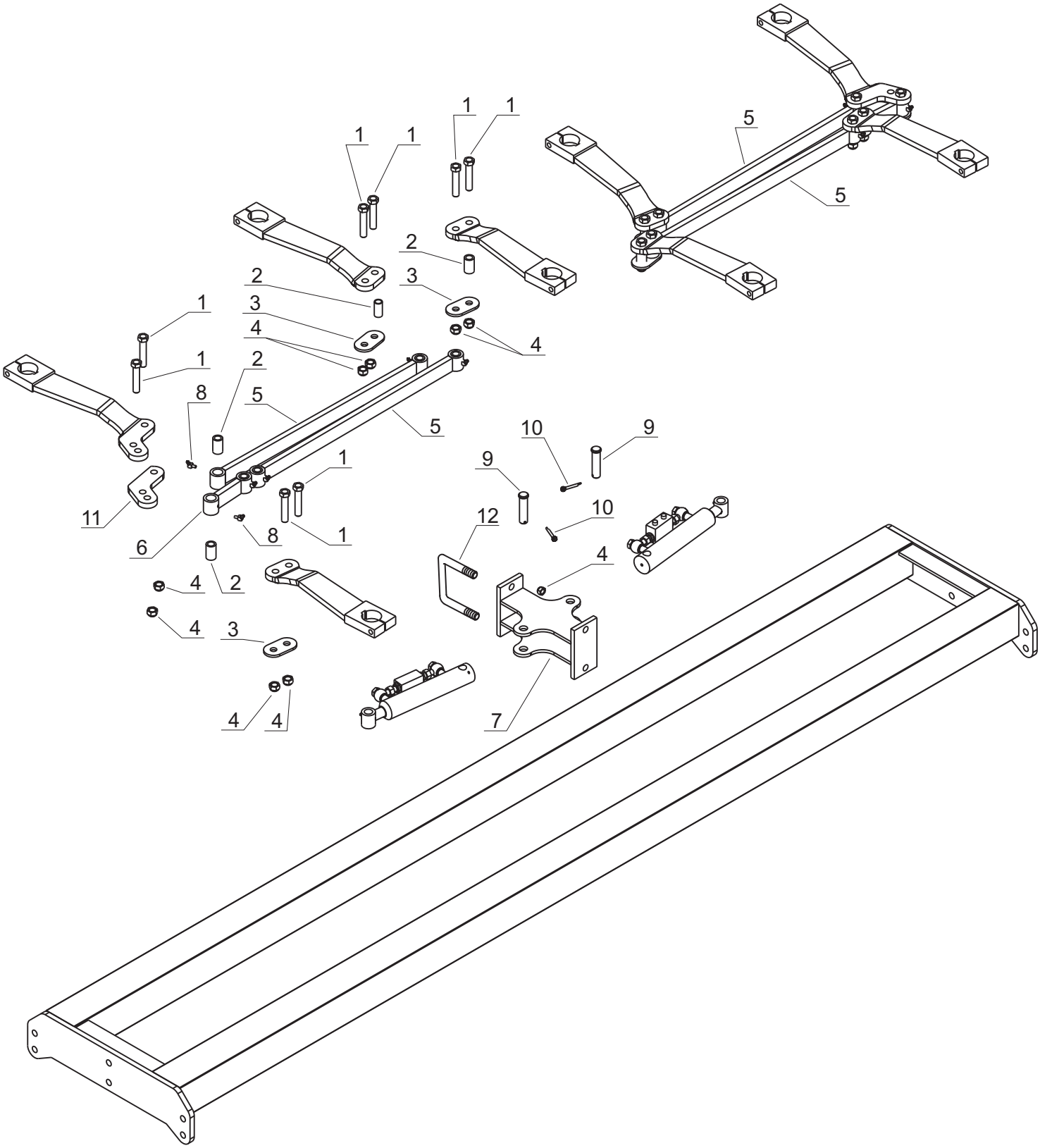

Fig.	Serial no.	Part no.	Pieces	Notes	Tab. 7
1		300304242	8	Screw	M16x80 8.8
2		7201003235	1		
3		7201003233	3		
4		300316023	8	Self locking nut	M16
5		7201003252	4		
6		7201003273	2		
7		7201003244	1		
8		300421005	12	Grease nipple	M8x1 K45
9		7201003245	2		
10		300333060	2	Pin	4x45
11		7201003263	1		
12		7202301005	2		

Tab. 8

Version 4m; 4,5m

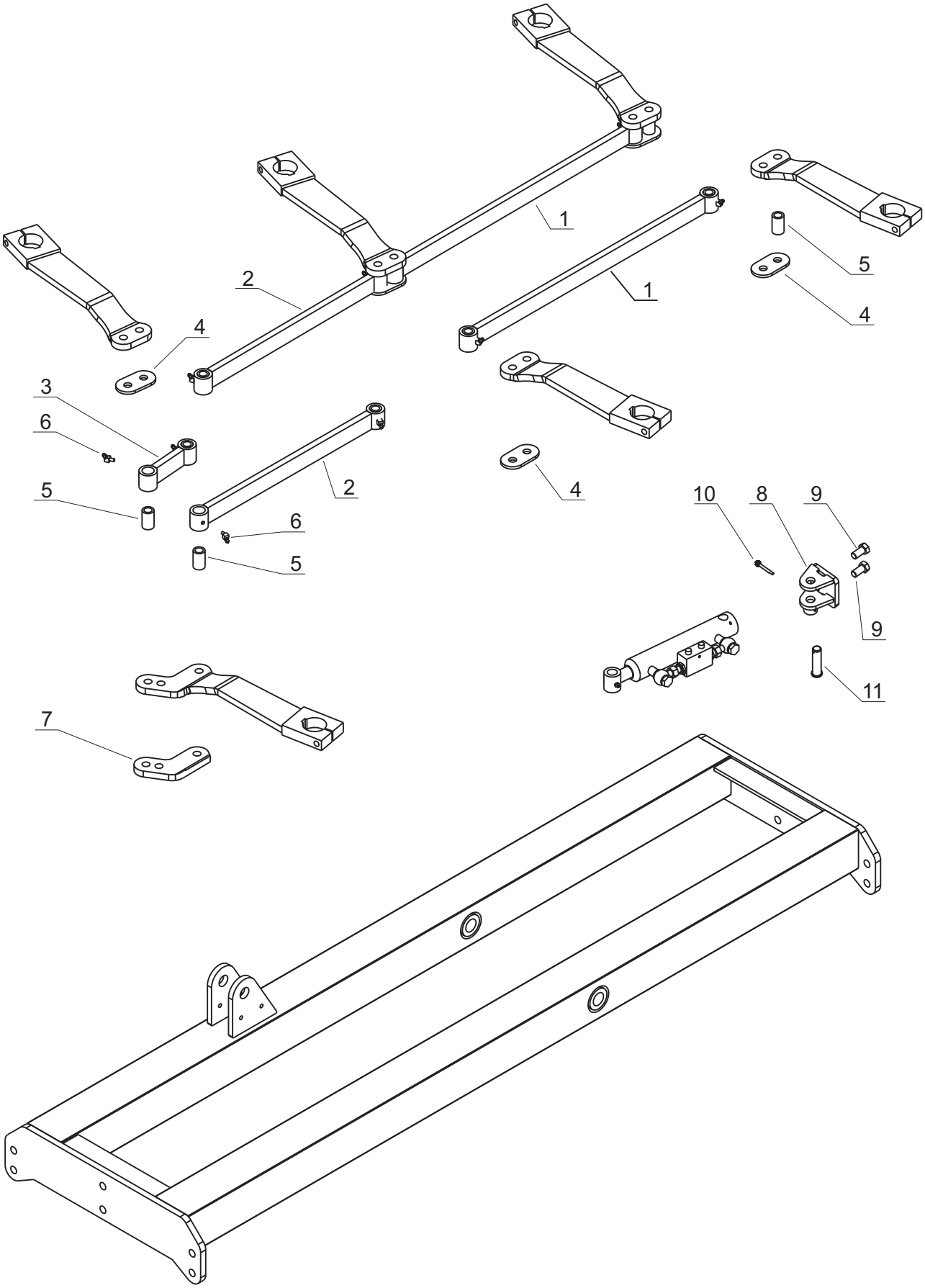

Tab. 8

Fig.	Serial no.	Part no.	Pieces	Notes	
1		7201003252	4		4m
1		7201003252	8		4,5m
2		7201003255	4		4m
3		7201003273	2		4m; 4,5m
4		7201003233			
5		7201003235	4		
6		300421005	20	Grease nipple	M8x1 K45
7		7201003263	1		
8		7201003241	1		
9		300304208	2	Bolt	M16x30 8.8
10		300333060	1	Pin	4x45
11		7201003245	1		

Tab. 9

Version 6m

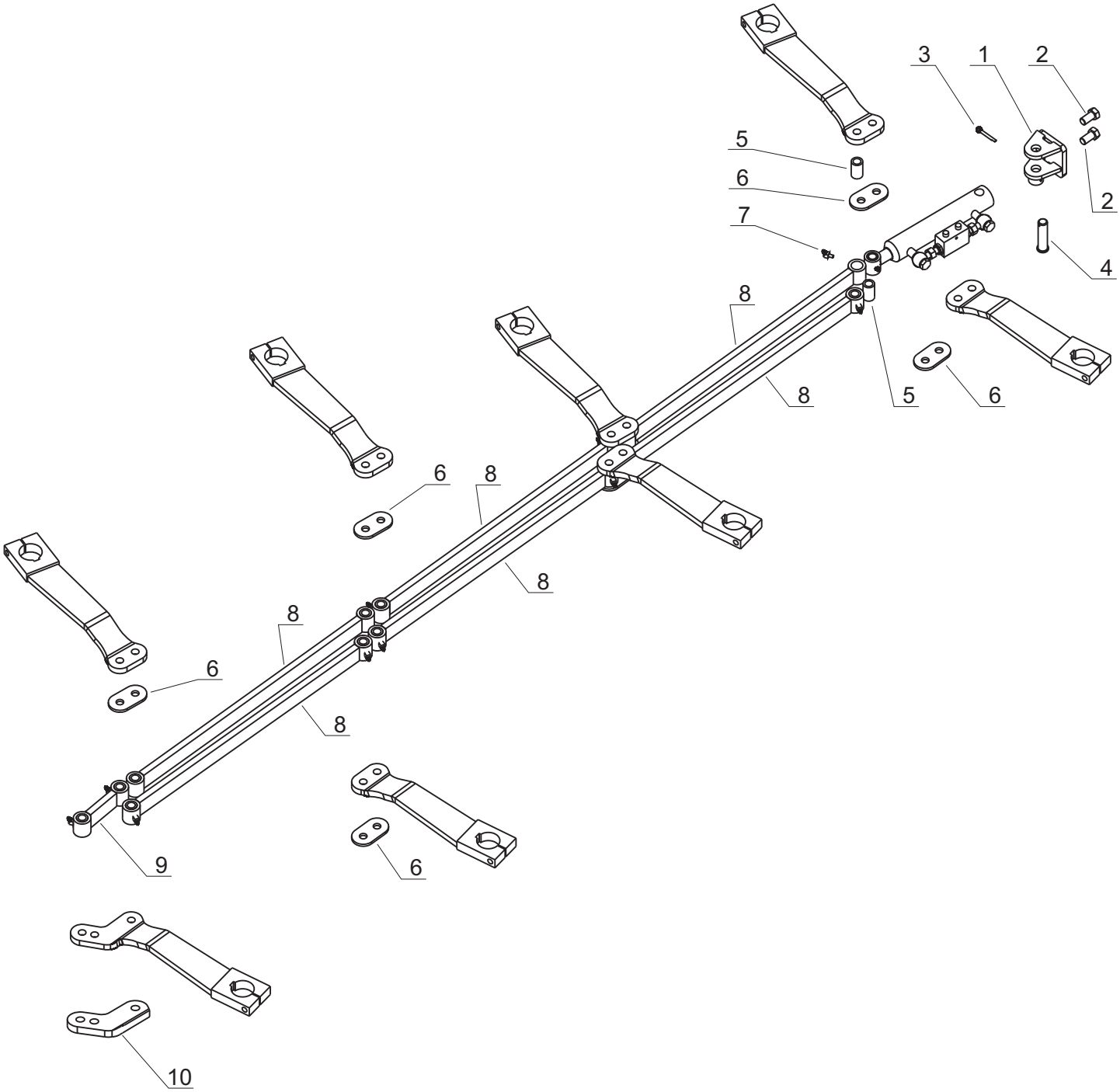

Tab. 9

Fig.	Serial no.	Part no.	Pieces	Notes	
1		7201003241	1		
2		300304208	2	Bolt	M16x30 8.8
3		300333060	1	Pin	4x45
4		7201003245	1		
5		7201003235	2		
6		7201003233	8		
7		300421005	28	Grease nipple	M8x1 K45
8		7201003252	12		
9		7201003273	2		
10		7201003263	1		

Tab. 10

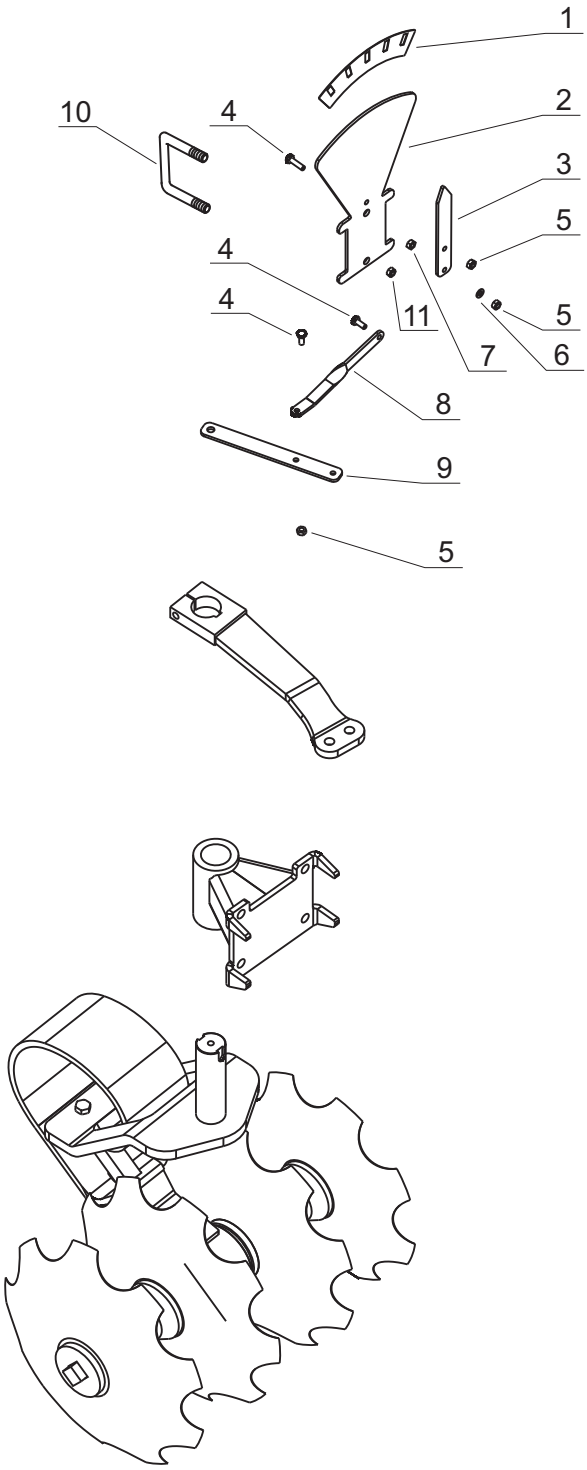

Tab. 10

Fig.	Serial no.	Part no.	Pieces	Notes	
1		7201003266	1		
2		7201003283	1		
3		7201003260	1		
4		300304153	3	Bolt	M8x20 8.8
5		300316027	3	Self locking nut	M8
6		300332039	1	Washer	8.4
7		300315018	1	Nut	M8-8-B
8		7201003275	1		
9		7201003261	1		
10		7203307007	1	U-bolt	M12
11		300316021	8	Self locking nut	M12

Tab. 11

Hydraulik plan 3 m

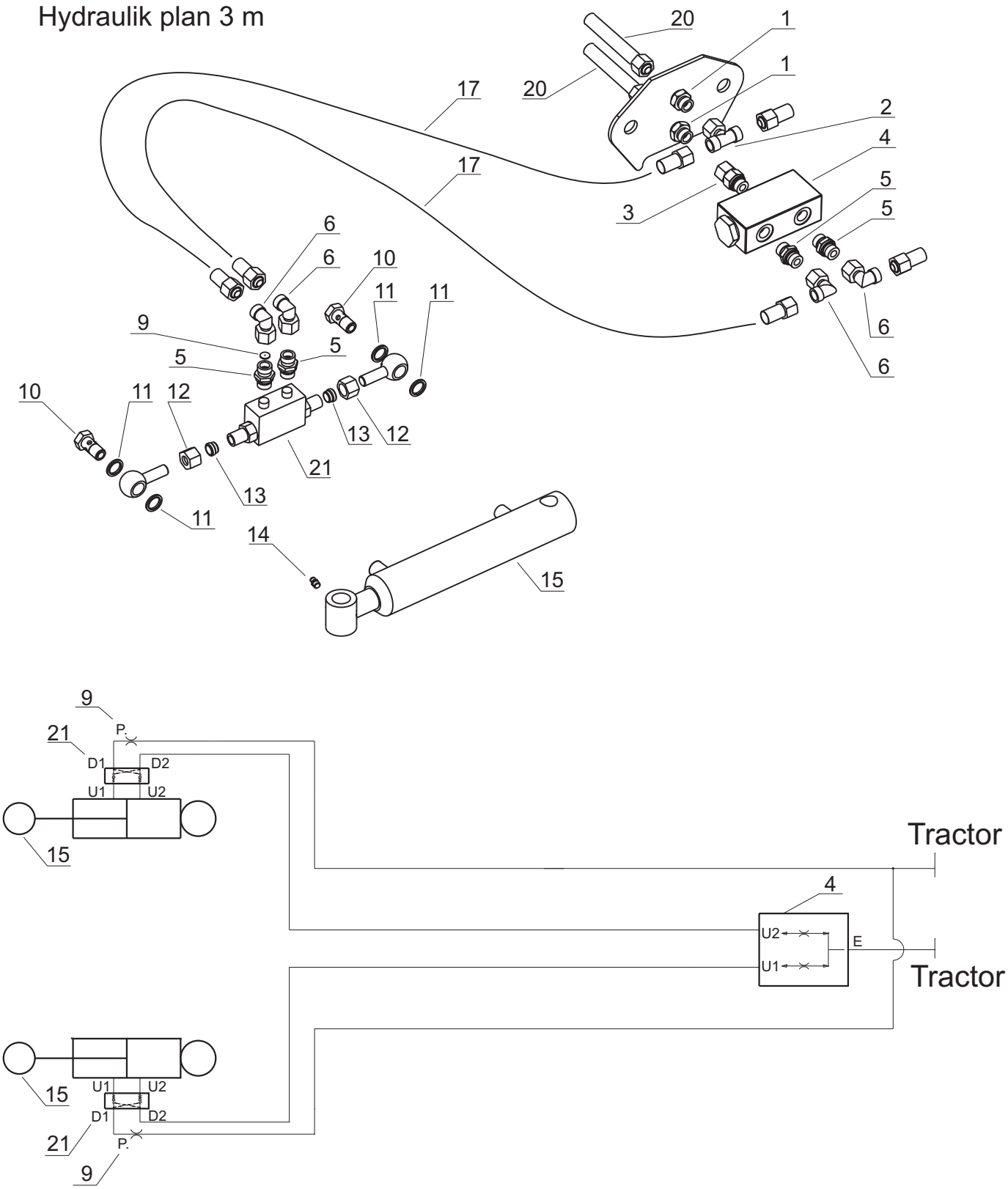

Tab. 11

Fig.	Serial no.	Part no.	Pieces	Notes	
1		7210000125	2	Quick nutXFV NW 10 HL	MS 18.15+GSS-12L
2		7210000105	1	Hydr. CouplingXT NW 10HL	ETS-D 12L
3		7210000128	1	Nut	EGES-D12L-R3/8-WD
4		7210000135	1	ValveVDFR 05-001	Po204722 1650021100 VDFR 38-12
5		71202079060	6	Nut	GES 12L-R 3/8-WD
6		7210000112	6	Hydr. CouplingXVE WONW 10HL	EWS-12L
9		7203310007	2	Washer	
10		7210000167	4	Nipple	HBB 06
11		7210000168	8	Washer	Usitring TT 06
12		7210000169	4	Nut	M12L
13		7210000170	4	Ring	
14		300421006	2	Lubricating nipple	M8x1
15		7201003247	2	Cylinder	701.85 KON Chapel
17		7210000103	4	Hydr. Hose	PHD AOL 210 750mm
20		7210000134	2	Hydr. Hose	PHD AOL 210 2100mm
21		7210000119	2	Sperrblock	3 m

Tab. 12

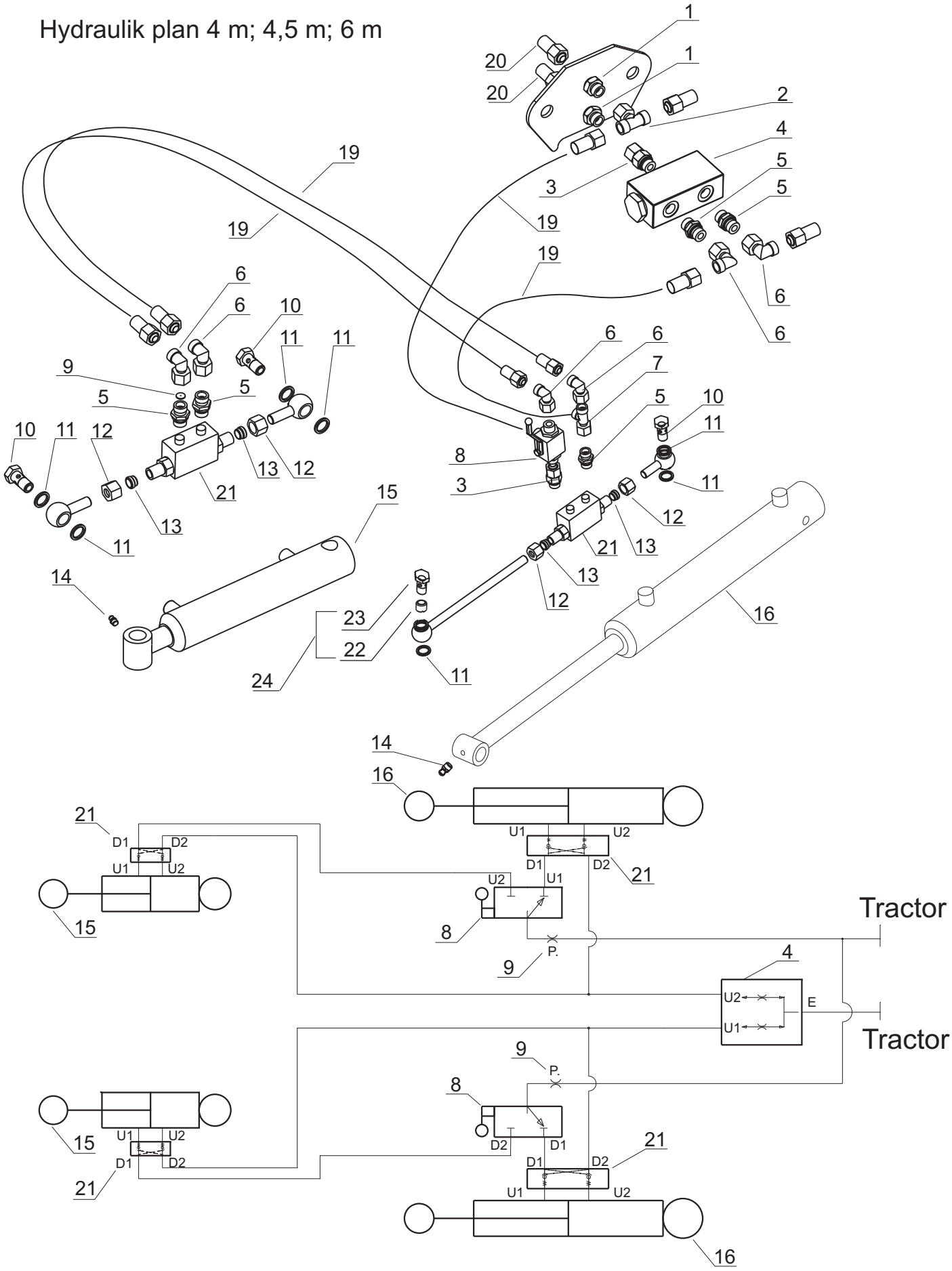
Hydraulik plan 4 m; 4,5 m; 6 m
1
1
20
20
2
4
5
5
3
19
19
19
19
6
6
6
6
10
11
11
6
6
7
9
5
5
5
10
11
10
11
12
13
12
8
3
11
21
15
12
13
21
11
13
14
12
23
22
16
24
11
14
16
21
D1
D2
U1
U2
U1
U2
D1
D2
21
U2
U1
15
8
Tractor
P.
9
4
U2
E
U1
Tractor
9
P.
8
15
U1
U2
D2
D1
21
D1
D2
D1
D2
21
U1
U2
16

Tab. 12

Fig.	Serial no.	Part no.	Pieces	Notes	
1		7210000125	2	Quick nut	XFV NW 10 HLMS 18.15+GSS-12L
2		7210000105	1	Hydr. Coupling	XT NW 10HLETS-D 12L
3		7210000128	3	Nut	EGES-D12L-R3/8-WD
4		7210000135	1	Valve	VDFR 05-001Po204722 1650021100 VDFR 38-12
5		71202079060	8	Nut	GES 12L-R 3/8-WD
6		7210000112	10	Hydr. Coupling	XVE WONW 10HLEWS-12L
7		7210000165	2	Hydr. Coupling	ELS-D 12L
8		7210000159	2	Valve	3BKHL 10LK
9		7203310007	2	Washer	
10		7210000167	8	Nipple	HBB 06
11		7210000168	16	Washer	Usitring TT 06
12		7210000169	8	Nut	M12L
13		7210000170	8	Ring	
14		300421006	4	Lubricating nipple	M8x1
15		7201003247	2	Cylinder	701.85 KON Chapel
16		7210000118	2	Cylinder	703.3 Chapel (4/4.5m)
16		7210000156	2	Cylinder	VDE 30x70 c300 (6m)
19		7210000124	8	Hydr. Hose	PHD AOL 210 1200mm
20		7210000134	2	Hydr. Hose	PHD AOL 210 2100mm
21		7210000119	4	Sperrblock	4/4.5/6 m.
22		372005275	2	Nozzle M12	
23		372005276	2	Screw with M12 inside	
24		372260500	2	Screws kit 372005275+ 372005276	

Tab. 13

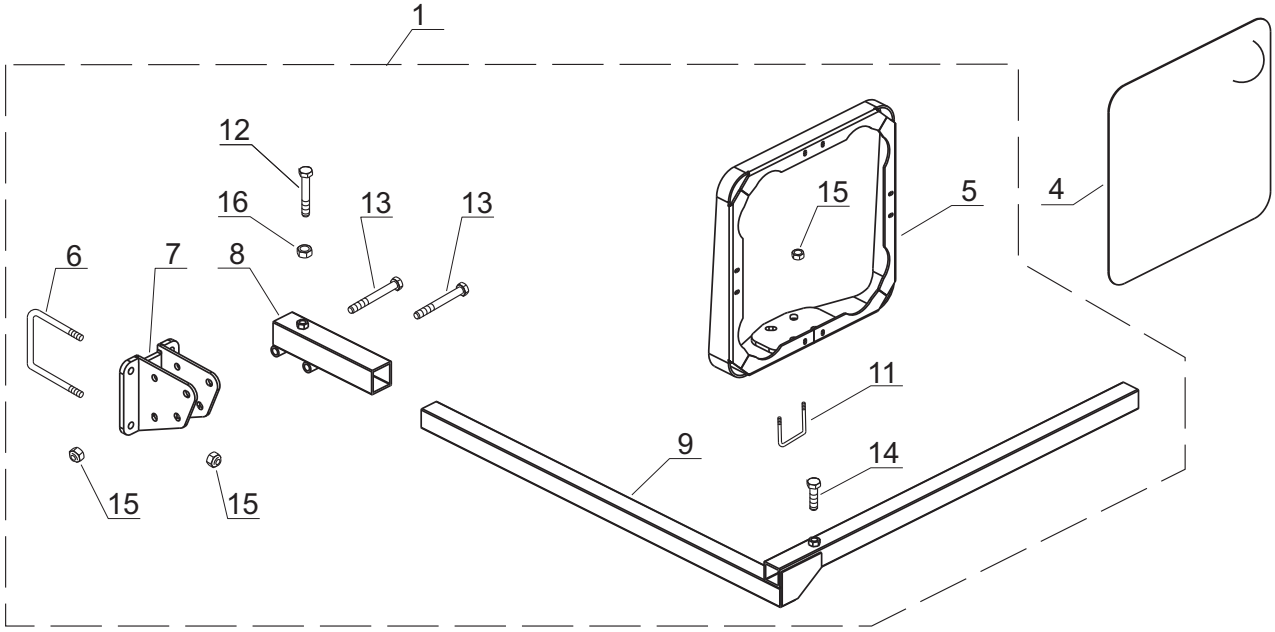
1
12
16
13
13
6
7
8
15
5
4
11
9
14
15
15

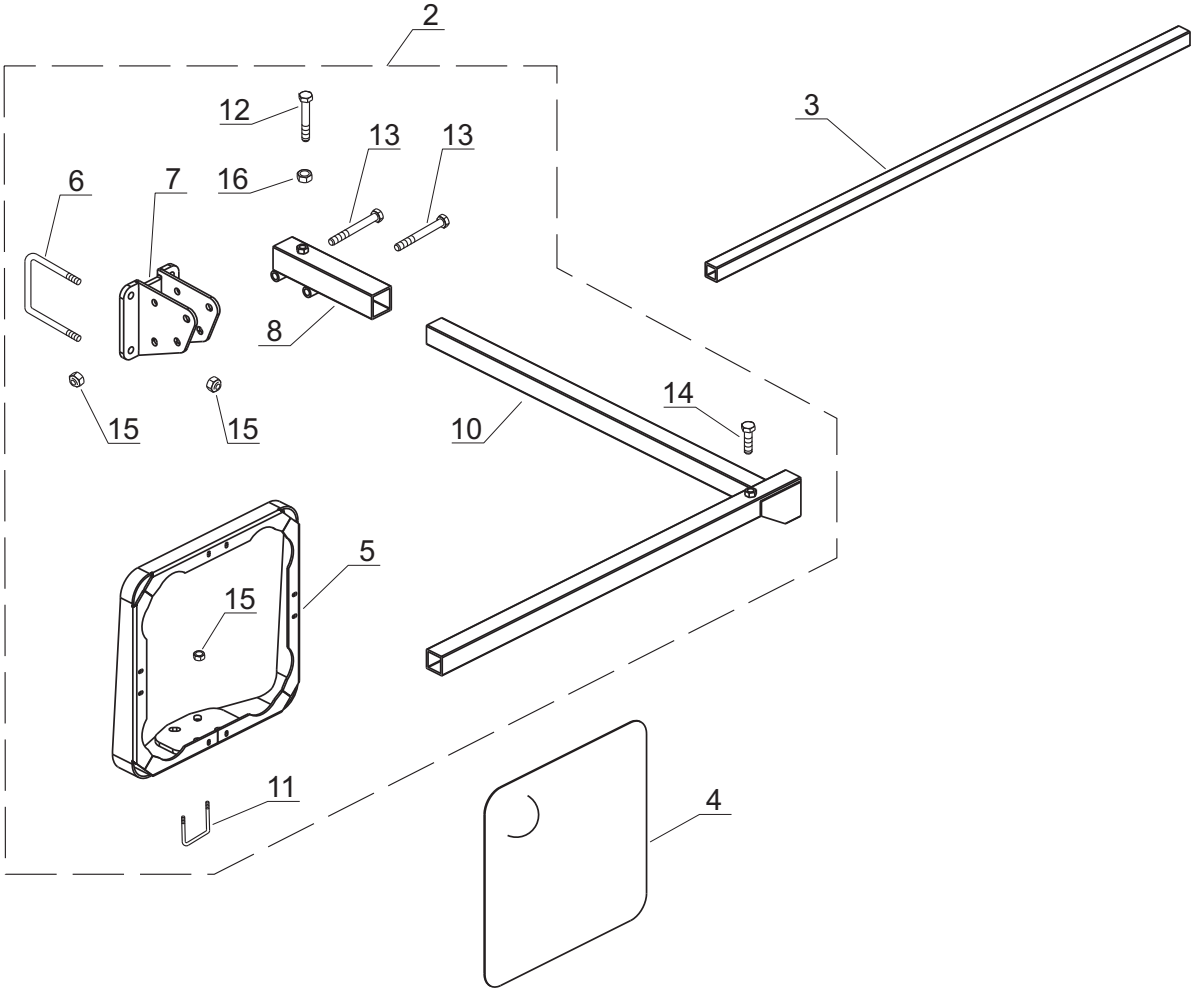
2
3
12
13
13
6
7
16
8
15
15
10
14
5
15
11
4

Tab. 13

Fig.	Serial no.	Part no.	Pieces	Notes	
1		7201003290	1		
2		7201003291	1		
3		7201003289	1		
4		7201003298	2		
5		7203307006	2		
6		7203307007	4		
7		7201003296	2		
8		7203307011	2		
9		7201003293	1		
10		7201003292	1		
11		7203307005	4		
12		300304064	2	BoltM12x70	DIN931
13		300304066	4	BoltM12x80	DIN931
14		300304056	2	BoltM12x30	DIN933
15		300316021	16	Self locking nut	M12 DIN985
16		300315003	2	Nut	M12 DIN934

Tab. 14

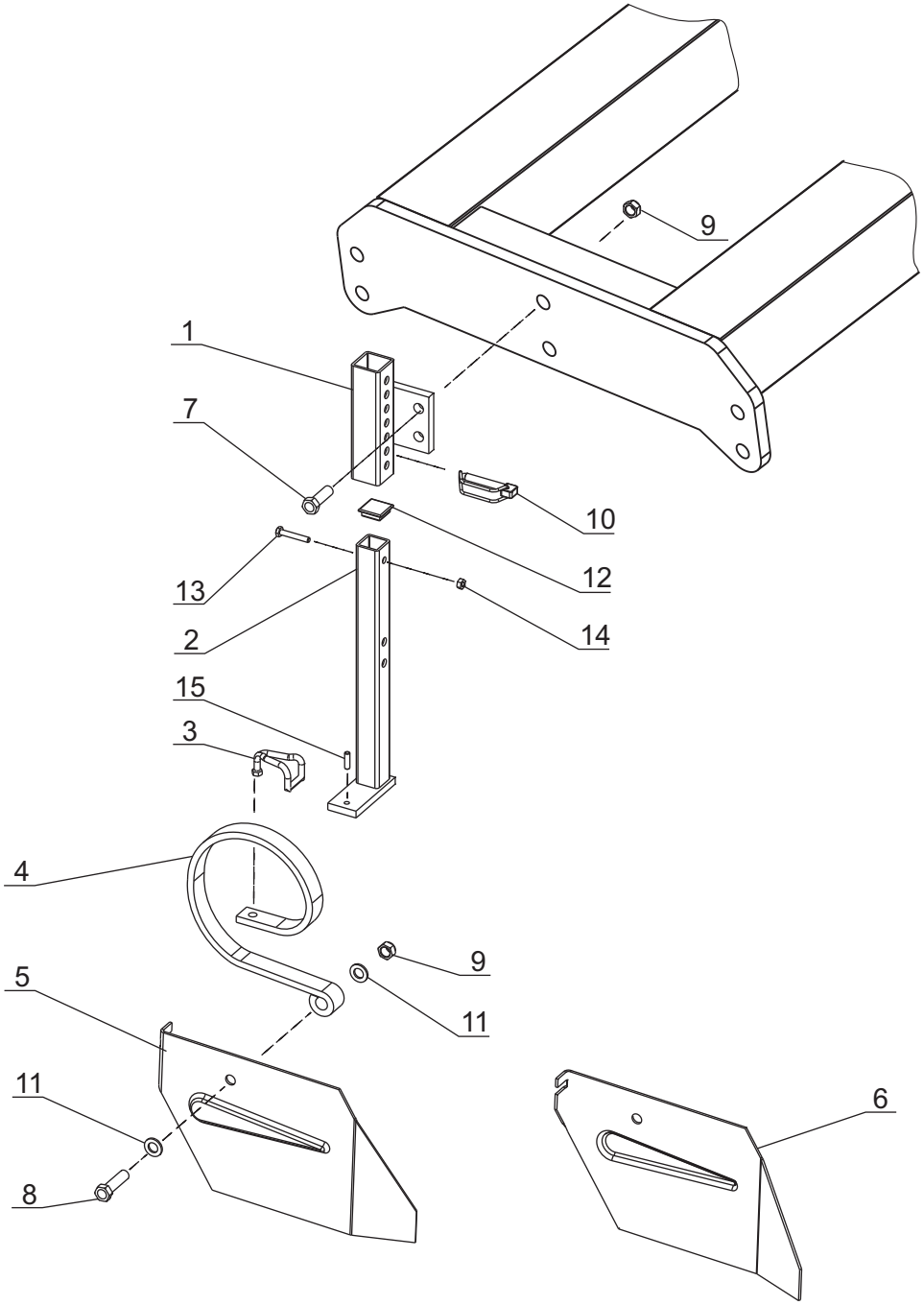

Tab. 14

Fig.	Serial no.	Part no.	Pieces	Notes	
1		7204005303	2	External pipe	
2		7204005304	2	Internal pipe	
3		101000507	2	Tine clamp cpl.	
4		105077093	2	Spring	
5		7204005311	1	Side plate LH	
6		7204005310	1	Side plate RH	
7		300304094	4	Bolt	M16x50 8.8 DIN933
8		100306058	2	Bolt	M16x60 8.8 DIN931
9		300316023	6	Self-locking nut	M16 DIN985
10		372004023	2	Clip pin	
11		300332009	4	Washer	M16 DIN126
12		7000306151	2	Plastic stopper	
13		7000550255	2	Bolt	M8x55 8.8 DIN931
14		300316027	2	Self-locking nut	M8 DIN985
15		300323034	2	Tension pin	8x30 DIN1481