KONGSKILDE
Moving agriculture ahead

Germinator Pro

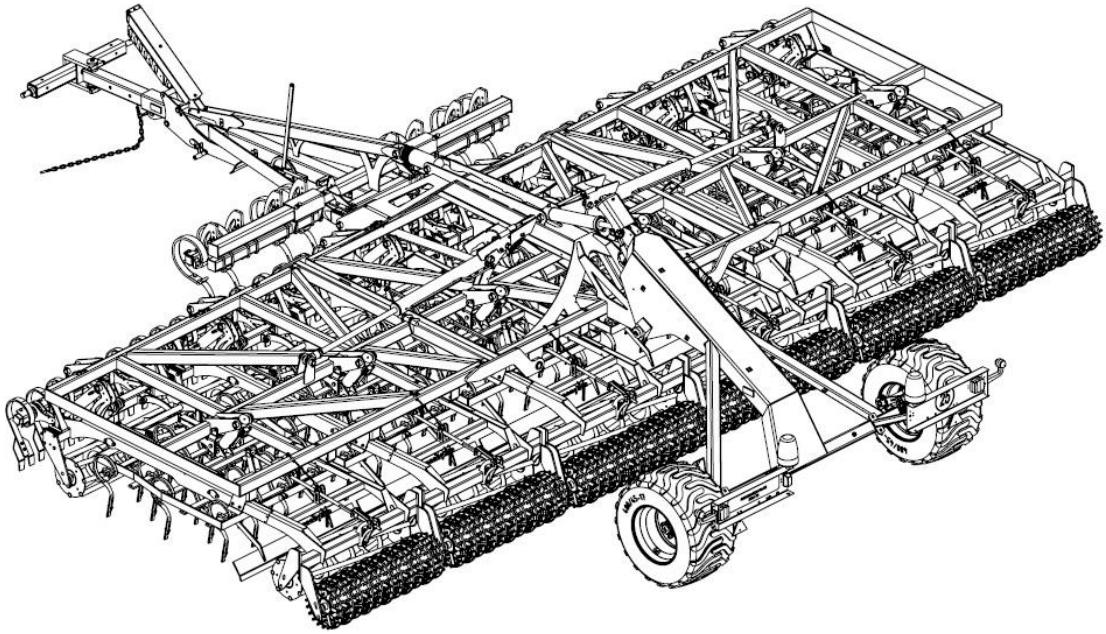

Reservedelsliste
Spare parts list
Ersatzteilliste
Onderdelenlijst
Liste de piece de rechange
Catalogul de piese de schimb
Katalog części zamiennych

Valid from serial number / Gültig ab Seriennummer / Valable á partir de numéro de série / Gyldig fra serienummer:

Serial number / Seriennummer / Numéro de série / Serienummer: A12-2410-40170026 for GP5400

A12-2420-40170044 for GP6200

A12-2430-40170024 for GP7900

Tab.1

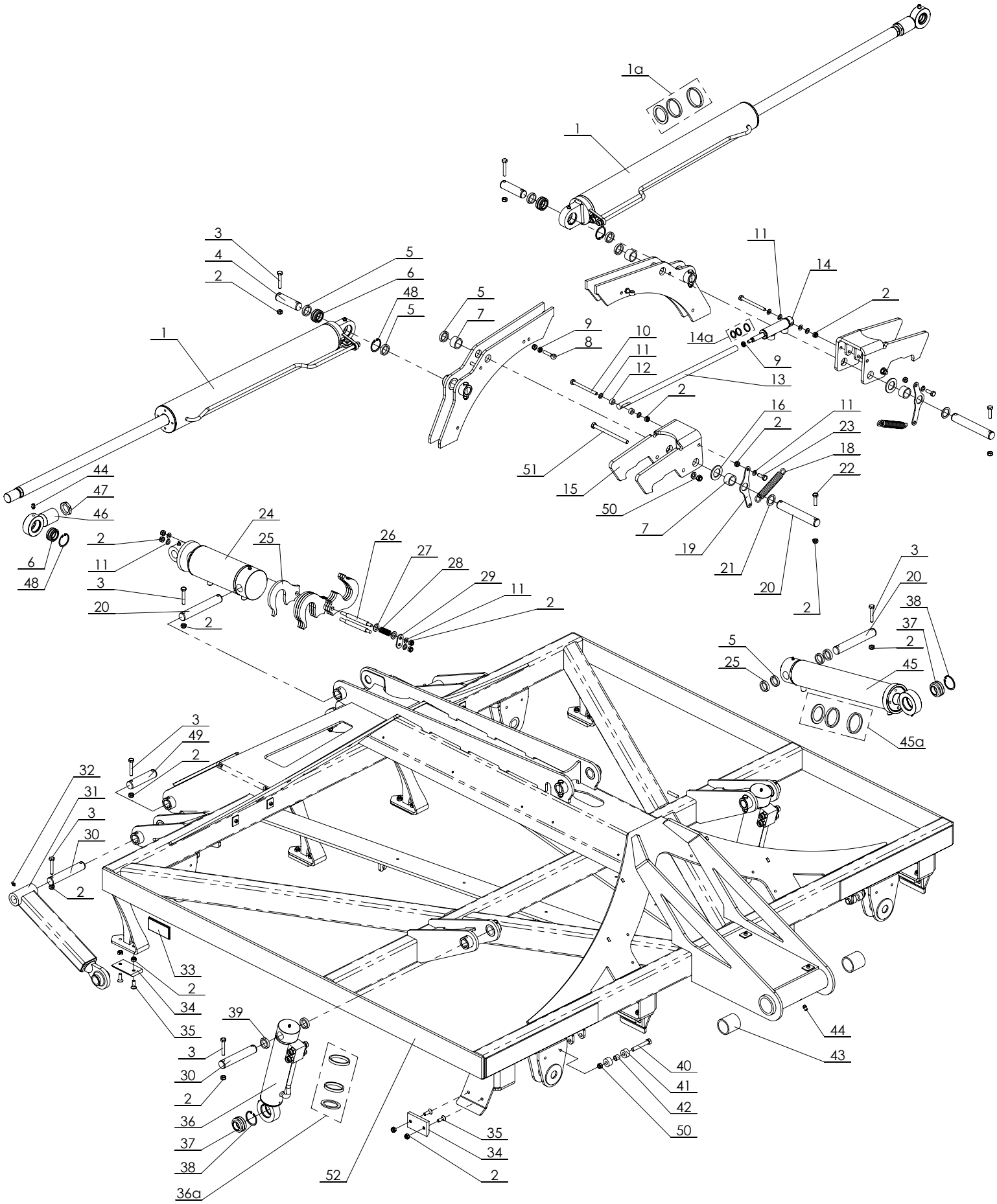
1a
1
3
4
2
5
6
48
5
5
7
9
8
10
11
12
2
11
14
2
14a
9
13
1
16
2
11
23
18
22
51
15
50
7
19
21
20
2
44
47
46
6
48
2
11
3
20
2
24
25
26
27
28
29
11
2
3
20
38
37
2
5
25
45
45a
3
49
2
32
31
3
30
2
33
2
34
35
39
3
30
2
36
37
38
36a
52
35
34
2
40
41
42
50
44
43

Central frame

Tab.1 Date: 2017.08.01

Fig.	CNH Part no.	Kongskilde Part no.	Quantity	Description
1		301044039	2	Wing cylinder
1a		301044014		Sealing kit for 301044039
2		300316020	60	Lock nut M10 cl.8.8 DIN985
3		300304197	20	Bolt M10x60 cl. 8.8 DIN931
4		301010010	2	Folding cylinder pin L=109mm
5		373006243	8	Bushing D40x4,5 L=8
6		301044034	4	Wing cylinder bearing
7		373006242	4	Bushing D40x4,5 L=24
8		7000600986	2	Eye bolt M10x50
9		71307210025	3	Nut M10 DIN936
10		300304226	2	Bolt M10x120 DIN931
11		300332027	12	Washer M10 DIN126
12		300071621	2	Bush d=10; l=9,5
13		301013005	1	Rod of hooks
14		301044019	1	Cylinder for hooks
14a		301044020		Sealing kit for 301044019
15		301013001	2	Hook
16		300332037	2	Washer M30 DIN126
17		300332008	2	Washer M12 DIN126
18		371002803	2	Spring
19		301013008	2	Spring holder
20		301010011	4	Drawbar and chassis cylinder pin L=197
21		200215491	4	Washer M30 L=2
22		300304036	4	Bolt M10x40 cl.8.8 DIN931
23		300304034	2	Bolt M10x30 cl. 8.8 DIN933
24		301044017	1	Drawbar cylinder
25		301044029	7	Regulation plate
26		301044030	2	Pivot
27		300332032	2	Washer M14 DIN126
28		101200048	1	Spring
29		301044031	1	Link
30		301010008	4	Section pin L=170mm
31		301010002	2	Section arm
32		300421002	2	Grease nipple M6x1
33		600475131	2	Yellow reflector
34		301010053	12	Plastic plate 100x60
35		100304023	24	Bolt M10x30 DIN7991
36		301044027	2	Hydraulic cylinder for section
36a		301044028		Sealing kit for 301044028
37		301044033	6	Bearing for cylinder
38		200215290	6	Seger ring 55x2 DIN472
39		301010029	6	Bush D=30 L=9
40		300304066	2	Bolt M12x80 cl.8.8 DIN931
41		301014134	4	Plastic washer
42		300066078	2	Bushing
43		7201011429	2	Bush
44		300421009	1	Grease nipple M10x1
45		330100001	1	Hydraulic cylinder for chassis
45a		301044046		Sealing kit for 330100001
46		301044035	2	Wing cylinder housing for bearing
47		71307736025	2	Nut M36x2 cl.8 FZB DIN936
48		7000603351	2	Seger ring DIN472
49		301010009	2	Drawbar pin L=129
50		300316021	4	Lock nut M12 cl. 8.8 DIN985
51		300304047	2	Bolt M12x170 cl. 8.8 DIN931
52		301011000	1	Central frame

Tab.2

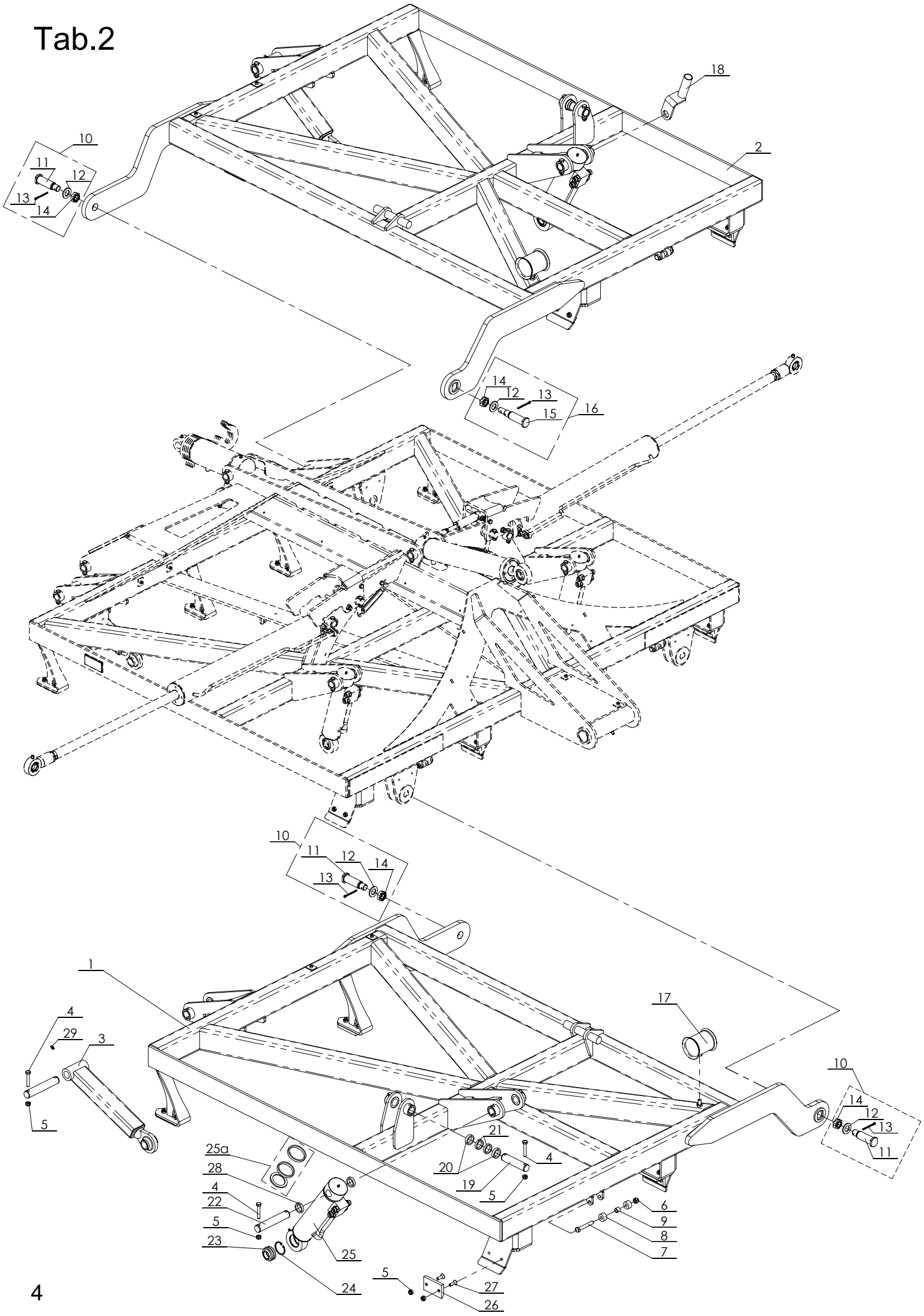
18
2
10
11
12
13
14
16
15
1
4
29
3
5
17
21
20
19
25a
28
22
23
25
24
6
9
8
7
27
26

Tab.2 Date: 2017.08.01

Fig.	CNH Part no.	Kongskilde Part no.	Quantity 5400	Description
1		301012001	1	Left wing 5,4m
2		301012002	1	Right wing 5,4m
3		301010002	2	Section arm
4		300304197	12	Bolt M10x60 cl. 8.8 DIN931
5		300316020	36	Lock nut M10 cl. 8.8 DIN985
6		300316021	2	Lock nut M12 cl. 8.8 DIN985
7		300304066	2	Bolt M12x80 cl. 8.8 DIN931
8		301014134	4	Plastic washer
9		300066078	2	Bushing
10		301010027	3	Complete pin for wings 11+12+13+14
11		301010017	3	Pin 30x80
12		300332035	4	Washer M24 DIN126
13		200215431	4	Split pin 5x50 DIN94
14		300316063	4	Nut M24x1,5 DIN937
15		301010061	1	Wing pin for ball valve
16		301010067	1	Complete pin for wing 12+13+14+15
17		301012025	2	Wing hose holder
18		301014033	1	Indicator bracket
19		301010009	2	Wing cylinder pin L=129
20		301010007	4	Bush D=30 L=10
21		373006243	4	Bushing D40x4,5 L=8
22		301010008	4	Section pin L=170mm
23		301044033	2	Bearing for cylinder
24		200215290	2	Seger ring 55x2 DIN472
25		301044027	2	Hydraulic cylinder for section
25a		301044028		Sealing kit for 301044027
26		301010053	12	Plastic plate 100x60
27		100304023	24	Bolt M10x30 DIN7991
28		301010029	3	Bush D=30 L=9
29		300421002	2	Grease nipple M6x1

Tab.3

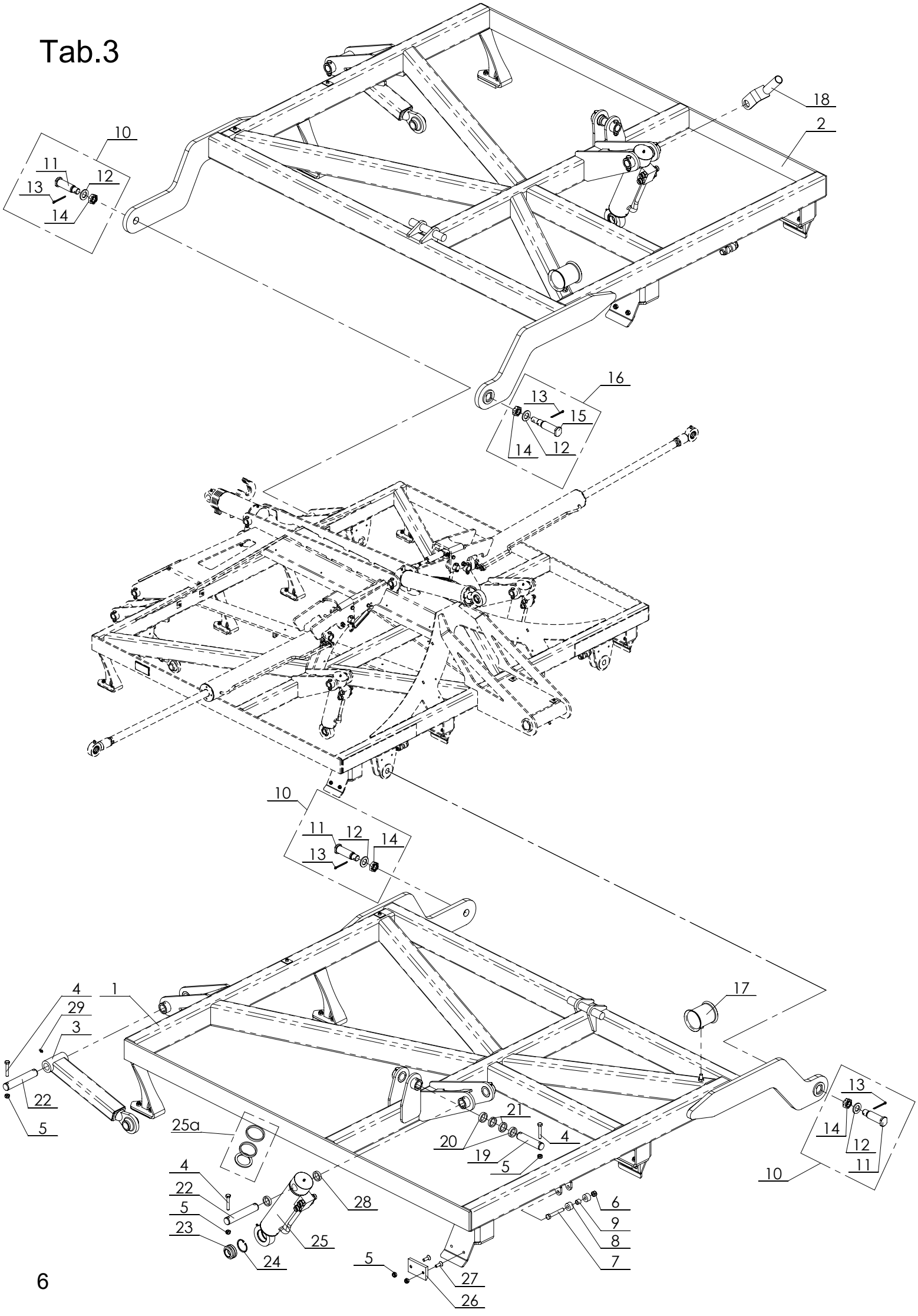

18
2
10
11
12
13
14
16
13
15
14
12
10
11
12
14
13
4
1
29
3
22
5
17
13
14
12
11
10
25a
21
20
4
19
5
4
22
5
23
24
25
28
6
9
8
7
5
27
26

Tab.3 Date: 2017.08.01

Fig.	CNH Part no.	Kongskilde Part no.	Quantity 6200	Description
1		301112001	1	Left wing 6,2m
2		301112002	1	Right wing 6,2m
3		301010002	2	Section arm
4		300304197	12	Bolt M10x60 cl. 8.8 DIN931
5		300316020	36	Lock nut M10 cl. 8.8 DIN985
6		300316021	2	Lock nut M12 cl. 8.8 DIN985
7		300304066	2	Bolt M12x80 cl. 8.8 DIN931
8		301014134	4	Plastic washer
9		300066078	2	Bushing
10		301010027	3	Complete pin for wings 11+12+13+14
11		301010017	3	Pin 30x80
12		300332035	4	Washer M24 DIN126
13		200215431	4	Split pin 5x50 DIN94
14		300316063	4	Nut M24x1,5 DIN937
15		301010061	1	Wing pin for ball valve
16		301010067	1	Complete pin for wing 12+13+14+15
17		301012025	2	Wing hose holder
18		301014033	1	Indicator bracket
19		301010009	2	Wing cylinder pin L=129
20		301010007	4	Bush D=30 L=10
21		373006243	4	Bushing D40x4,5 L=8
22		301010008	4	Section pin L=170mm
23		301044033	2	Bearing for cylinder
24		200215290	2	Seger ring 55x2 DIN472
25		301044027	2	Hydraulic cylinder for section
25a		301044028		Sealing kit for 301044027
26		301010053	12	Plastic plate 100x60
27		100304023	24	Bolt M10x30 DIN7991
28		301010029	3	Bush D=30 L=9
29		300421002	2	Grease nipple M6x1

Tab.4

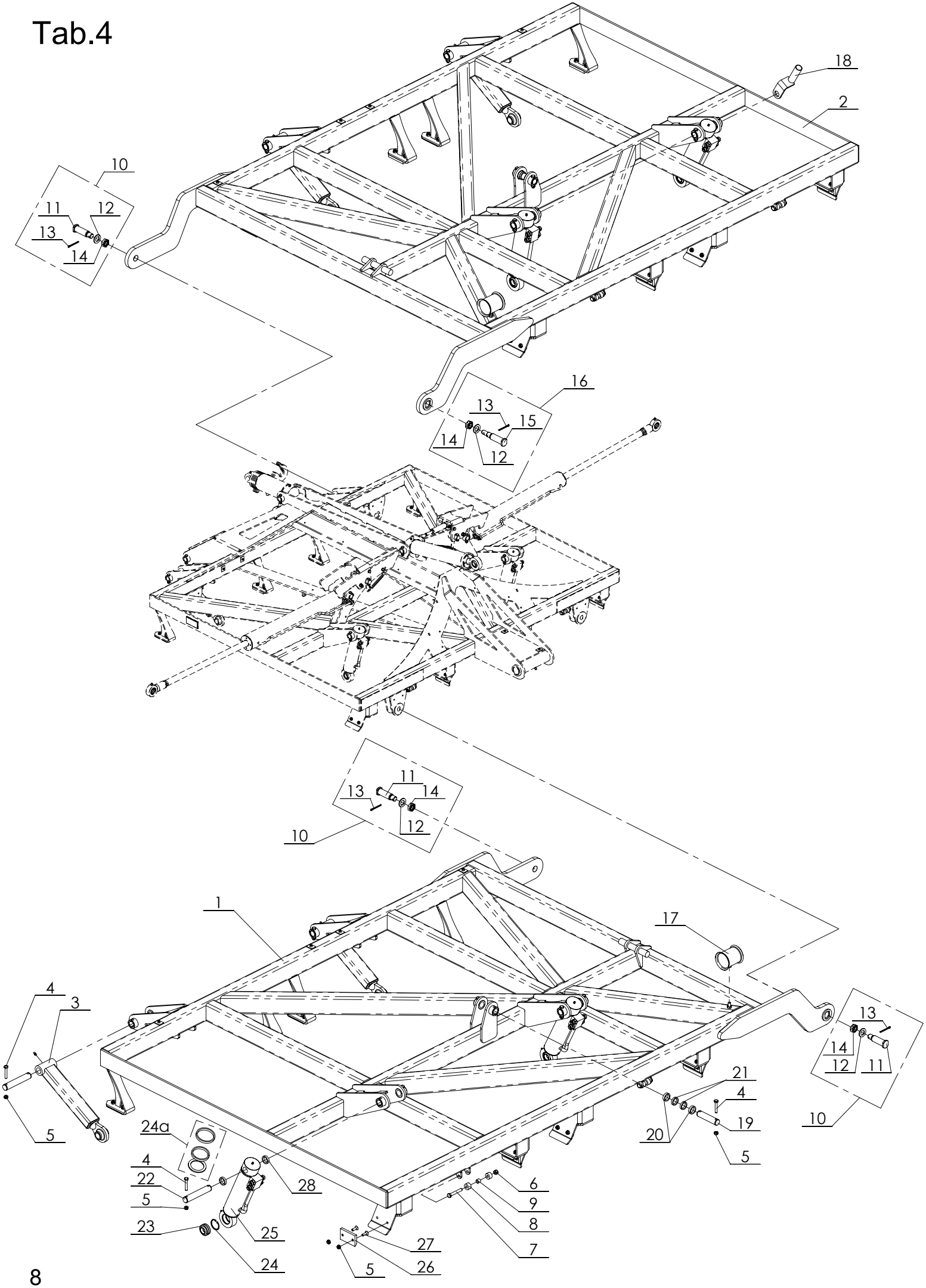
18
2
10
11
12
13
14
16
13
15
14
12
11
13
14
12
10
1
17
4
3
5
24a
4
22
5
23
24
28
25
27
26
5
6
9
8
7
21
4
19
20
5
13
14
12
11
10

Tab.4 Date: 2017.08.01

Fig.	CNH Part no.	Kongskilde Part no.	Quantity 7900	Description
1		301212001	1	Left wing 7,9m
2		301212002	1	Right wing 7,9m
3		301010002	4	Section arm
4		300304197	20	Bolt M10x60 cl. 8.8 DIN931
5		300316020	68	Lock nut M10 cl. 8.8 DIN985
6		300316021	4	Lock nut M12 cl. 8.8 DIN985
7		300304066	4	Bolt M12x80 cl. 8.8 DIN931
8		301014134	8	Plastic washer
9		300066078	4	Bushing
10		301010027	3	Complete pin for wings 11+12+13+14
11		301010017	3	Pin 30x80
12		300332035	4	Washer M24 DIN126
13		200215431	4	Split pin 5x50 DIN94
14		300316063	4	Nut M24x1,5 DIN937
15		301010061	1	Wing pin for ball valve
16		301010067	1	Complete pin for wing 12+13+14+15
17		301012025	2	Wing hose holder
18		301014033	1	Indicator bracket
19		301010009	2	Wing cylinder pin L=129
20		301010007	4	Bush D=30 L=10
21		373006243	4	Bushing D40x4,5 L=8
22		301010008	8	Section pin L=170mm
23		301044033	4	Bearing for cylinder
24		200215290	4	Seger ring 55x2 DIN472
25		301044027	4	Hydraulic cylinder for section
25a		301044028		Sealing kit for 301044027
26		301010053	24	Plastic plate 100x60
27		100304023	48	Bolt M10x30 DIN7991
28		301010029	7	Bush D=30 L=9
29		300421002	4	Grease nipple M6x1

Tab.5

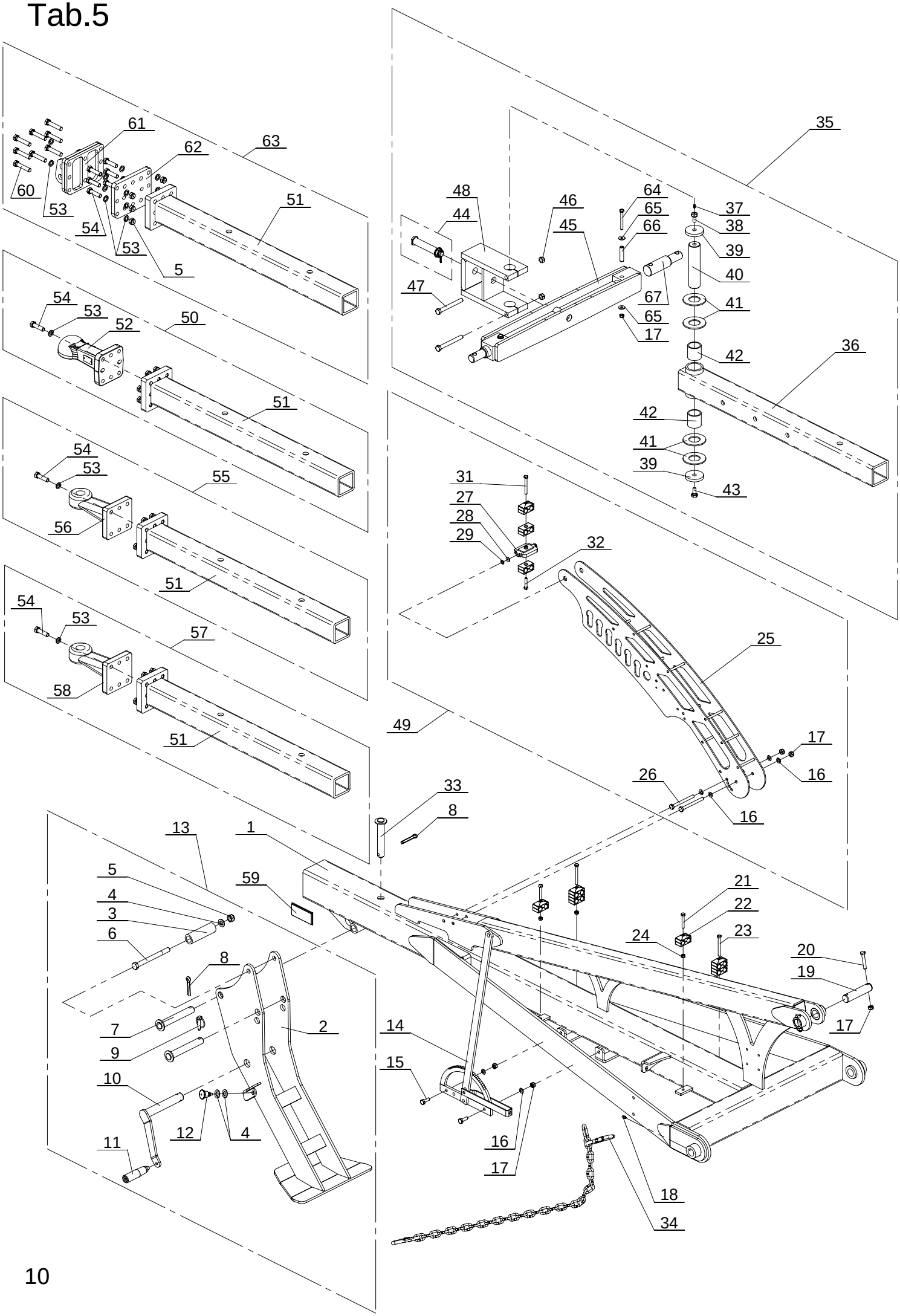
61
62
63
60
53
54
53
51
5
54
53
52
50
51
54
53
55
56
51
54
53
57
58
51
35
48
44
46
45
64
65
66
37
38
39
40
47
67
41
65
17
42
36
42
41
39
43
31
27
28
29
32
25
49
17
16
26
16
33
8
13
1
5
4
3
6
59
8
7
9
2
10
12
4
11
21
22
24
23
20
19
17
14
15
16
17
18
34

Drawbar and hitches

Tab.5 Date: 2017.12.04

Fig.	CNH Part no.	Kongskilde Part no.	Quantity	Description
1		301022001	1	Drawbar
2		301022023	1	Support leg
3		7201011221	1	Bush
4		300332009	3	Washer M16 DIN126
5		300316023	3	Lock nut M16 cl.8.8 DIN985
6		300304250	1	Bolt M16x170 DIN931
7		7201011227	2	Pin 25x155
8		100333031	2	Split pin 10x56
9		7000226328	1	Locking pin
10		301014026	1	Handle deep of working adj.
11		301010018	1	Handle
12		301014132	1	Mini indexing plunger
13		301022024	2	Support leg cpl.
14		300007556	1	Hand brake lewer
15		300304034	2	Bolt M10x30 cl.8.8 DIN933
16		300332027	8	Washer M10 DIN126
17		300316020	8	Lock nut M10 DIN985
18		300421002	2	Grease nipple M6
19		301010009	1	Drawbar pin L=129mm
20		300304197	2	Bolt M10x60 cl. 8.8 DIN931
21		300304161	2	Bolt M8x55 cl. 8.8 DIN933
22		7210000111	9	Double hose clamp d=20 DIN3015
23		200216116	3	Bolt M8x80 cl. 8.8 DIN931
24		300316027	4	Lock nut M8 cl. 8.8 DIN985
25		301022201	1	Hose holder
26		300304026	2	Bolt M10x110 cl.8.8 DIN931
27		301022206	1	Plate with hose bracket
28		300332052	2	Washer M6 DIN9021
29		300332025	2	Spring washer M6 DIN127B
30		300304139	2	Bolt M6x16 cl. 8.8 DIN933
31		300304163	1	Bolt M8x70 cl. 8.8 DIN931
32		200200003	1	Bolt M8x40 cl. 8.8 DIN931
33		7201011231	1	Pin 25x135
34		300360700	1	Saefty chain 6,7T
35A		330020950	1	2-points drawbar cat. 3
35B		330020960	1	2-points drawbar cat. 4
35C		330020970	1	2-points drawbar cat. 4 narrow
36		372202200	1	Drawbar pipe
37		300421006	1	Grease nipple M8x1
38		372006043	2	Special bolt
39		7201011421	1	Washer
40		372004941	4	Axle
41		372004939	2	Washer
42		7201011429	1	Bush
43		300304085	1	Bolt M16x1,5x35 cl. 8.8 DIN961
44		7203302030	1	Pin 30x140
45A		330020600	1	Beam cat. 3 / Beam cat. 4 narrow
45B		330020750	1	Beam cat. 4
46				
47		300304089	2	Bolt M16x140 cl. 10.9 DIN931
48		372243200	1	Long holder cpl.
49		301022200	1	Hose holder cpl.
50		301000102	1	Drawbar with towing eye K80
51		7201011212	1	Drawbar pipe
52		372006208	1	Towing eye K80
53		300332018		Spring washer M16 DIN127B
54		300304095		Bolt M16x60 cl. 10.9 DIN931
55		301000100	1	Drawbar with hook 40mm
56		7201011213	1	Hook 40mm DIN11026-RO 57233-0
57		301000101	1	Drawbar with hook 50mm
58		300007625	1	Hook 50mm DIN3678/ISO20019
59		600475131	1	Yellow reflector
60		300304275	8	Bolt M16x80 cl. 10.9 FZB DIN931
61		302020590	1	US hook
62		302020591	1	US hook plate

Tab.5

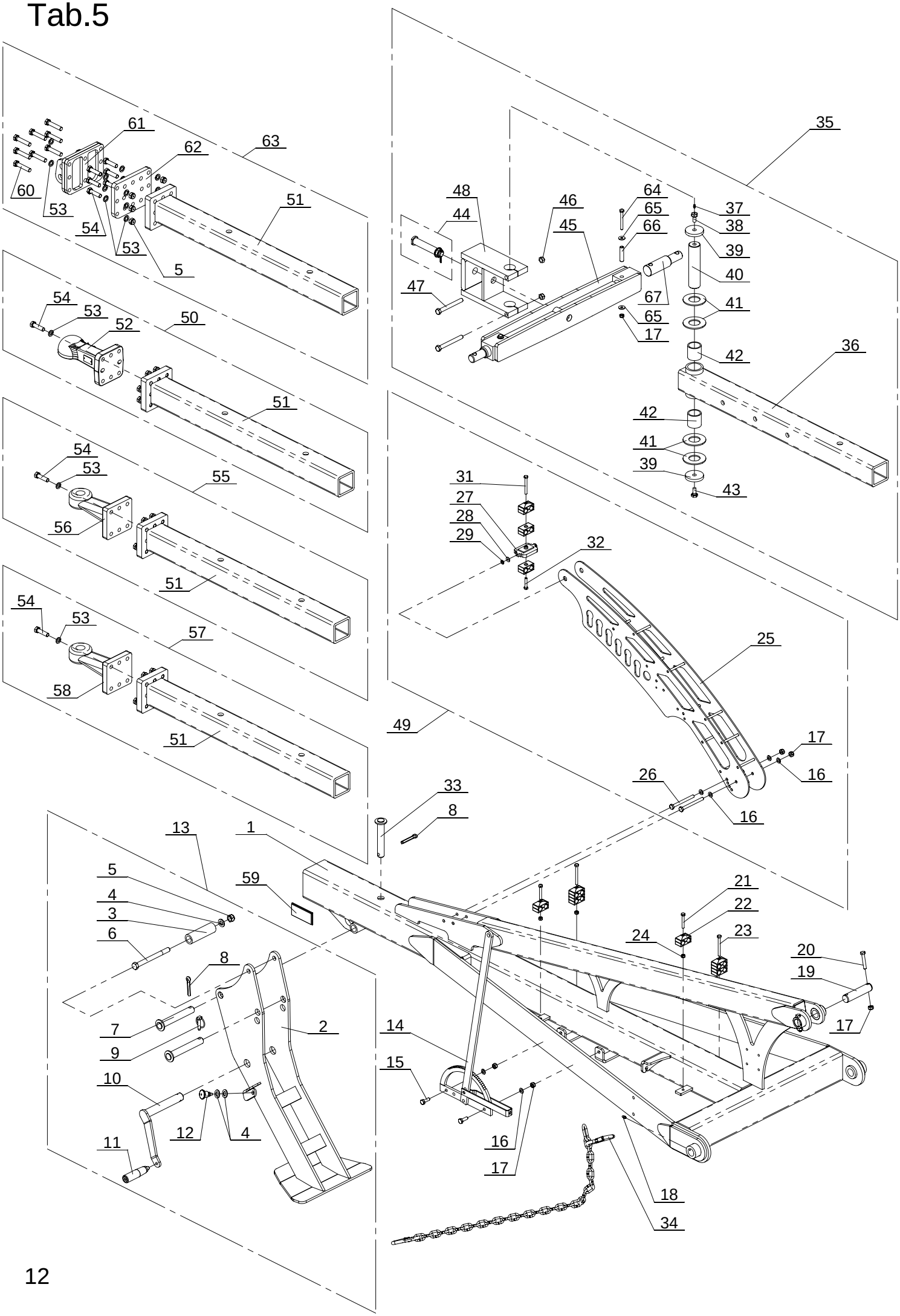
61
62
63
60
53
54
53
51
5
54
53
52
50
51
54
53
55
56
51
54
53
57
58
51
35
48
44
46
45
64
65
66
37
38
39
40
47
67
41
65
17
42
36
42
41
39
43
31
27
28
29
32
25
49
17
16
26
16
33
8
13
1
5
4
3
6
59
8
7
9
2
10
12
4
11
21
22
24
23
20
19
17
14
15
16
17
18
34

Tab.5 Date: 2017.08.01

Fig.	CNH Part no.	Kongskilde Part no.	Quantity	Description
63		301000103	1	Drawbar with USA double clevis adaptor – GP/DF/VF
64		300304196	2	Bolt M10x85 8.8 FZB DIN933
65		300332043	4	Washer M10 FZB DIN9021
66		300323119	2	Spring pin ISO 8752 DIN 1481 - 16x70
67A		330020303	2	Pin cat. 3
67B		330020344	2	Pin cat. 4

Tab.6

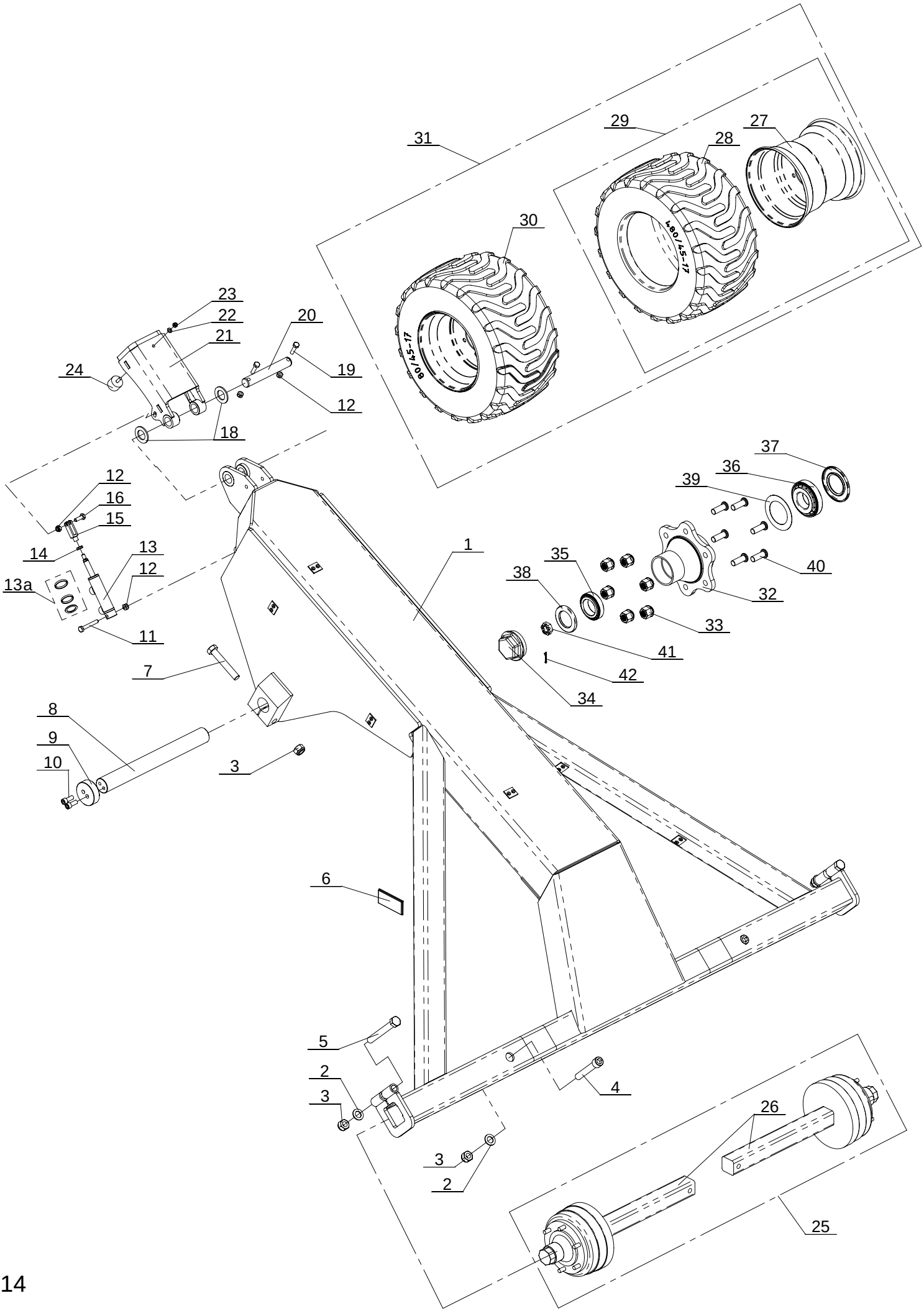
31
29
28
27
30
80/45-17
80/45-17
23
22
21
20
19
24
12
18
12
16
15
14
13
12
13a
11
1
37
36
39
35
38
40
32
33
41
42
34
7
8
9
10
3
6
5
2
3
4
26
3
2
25

Chassis, hubs w/o brakes and wheels

Tab.6 Date: 2017.12.04

Fig.	CNH Part no.	Kongskilde Part no.	Quantity	Description
1		7201011415	1	Chassis
2		300332034	4	Washer M20 DIN126
3		300316016	6	Lock nut M20 DIN985
4		300304263	2	Bolt M20x100 cl. 10.9 DIN912
5		71301620165	2	Bolt M20x160 cl. 8.8 DIN931
6		600475131	2	Yellow reflector
7		200214920	2	Bolt M20x120 cl. 8.8 DIN931
8		372006343	1	Chassis axle
9		372006344	2	Washer
10		71360412300	4	Bolt cl. 10.9 M20x100 DIN912
11		300304041	1	Bolt M10x70 cl. 8.8 DIN931
12		300316020	4	Lock nut M10 DIN985
13		301044019	1	Hydraulic cylinder
13a		301044020		Sealing kit for 301044019
14		71307210025	1	Nut M10 DIN936
15		7201014452	1	Fork 40811 DIN71752
16		300304034	1	Bolt M10x30 cl. 8.8 DIN933
17		301010007	4	Bush d=30; l=10
18		300332037	2	Washer M30 DIN126
19		300304036	2	Bolt M10x40 cl. 8.8 DIN 933
20		301010011	1	Draw bar and chassis cylinder pin L=197mm
21		301031101	1	Transport lock
22		300332039	1	Washer M8 DIN126
23		300316027	1	Lock nut M8 cl. 8.8 DIN985
24		7201011438	1	Bumper
25		301000400	1	Set of hubs without brakes
26		7203304012	2	Hub without brakes
27A		301010016	2	Rim (16.00x17 6/161/205 ET-0)
27B		71209067600	2	Rim (13.00x17 6/161/205 ET-0)
28A		301010015	2	Tyre 480/45-17
28B		372005154	2	Tyre 380/55-17
29A		301010014	1	Wheel 480/45-17 right
29B		372257200	1	Wheel 380/55-17 right
30A		301010013	1	Wheel 480/45-17 left
30B		372257300	1	Wheel 380/55-17 left
31A		301000200	1	Set of wheels 380/55-17
31B		301000201	1	Set of wheels 480/45-17
32		372003583	2	Hub
33		372003581	12	Wheel nut
34		372003587	-	Set of cap (2 pieces)
35		372003586	-	Set of bearings (item 35 + item 36)
36		372003586	-	Set of bearings (item 35 + item 36)
37		372003585	-	Set of sealings (2 x item 37 + 2 x item 38 + 2 x item 39)
38		372003585	-	Set of sealings (2 x item 37 + 2 x item 38 + 2 x item 39)
39		372003585	-	Set of sealings (2 x item 37 + 2 x item 38 + 2 x item 39)
40		372003579	-	Set of wheel stud (12 pcs.)
41		372003588	-	Set of nuts and spring pins (4 x item 41 + 4 x item 42)
42		372003588	-	Set of nuts and spring pins (4 x item 41 + 4 x item 42)

Tab.7

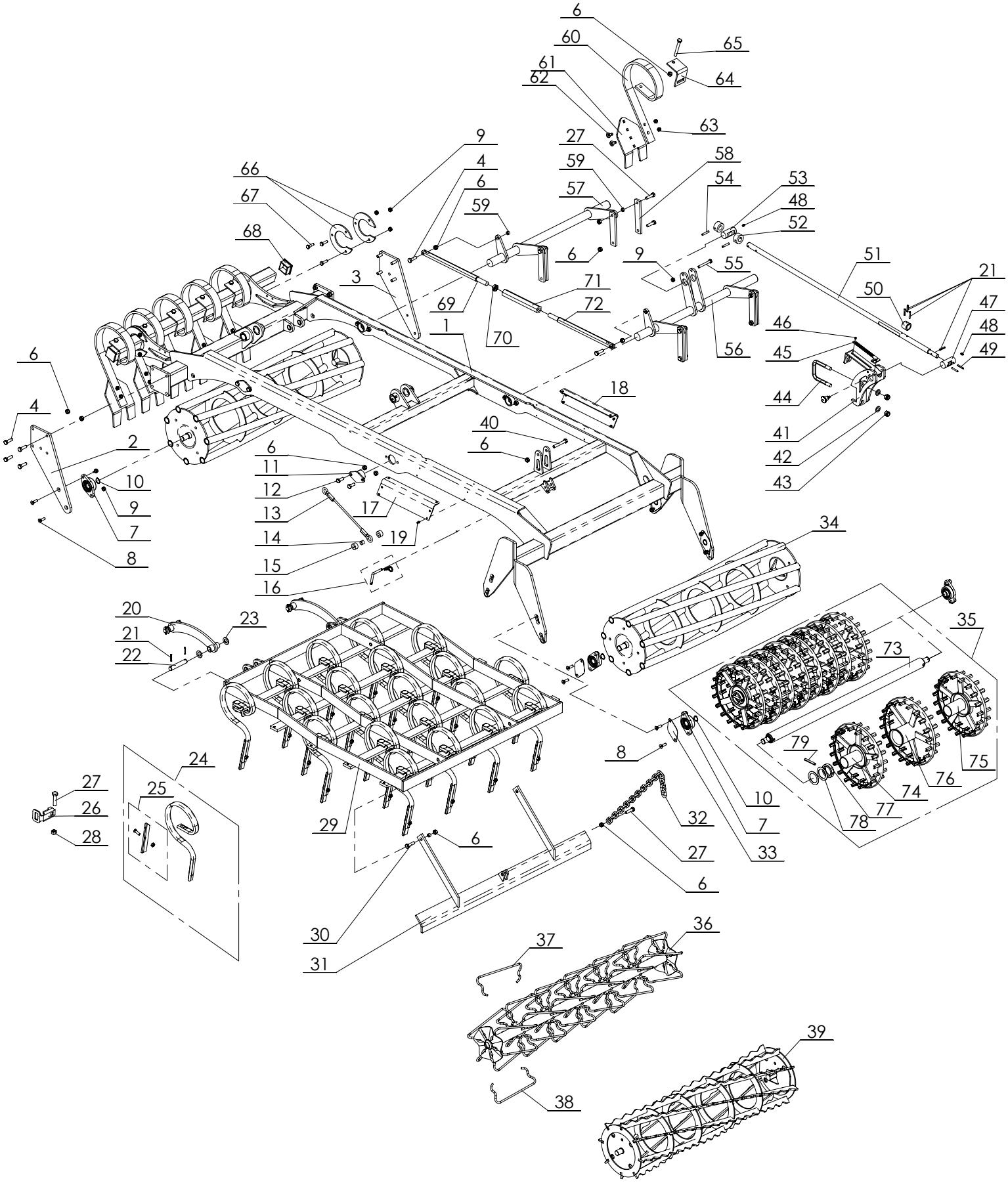
6
60
65
61
62
64
63
9
27
58
66
4
59
54
53
67
6
57
48
59
52
68
6
9
55
51
21
3
71
50
69
72
47
1
70
46
48
56
45
49
6
18
44
4
40
41
2
6
42
6
11
43
10
12
9
13
17
7
14
19
34
8
15
16
20
23
35
21
73
22
79
24
8
75
27
25
76
26
74
10
77
28
29
32
7
78
6
27
33
6
30
36
37
31
39
38

Sections

Tab.7 Date: 2017.08.01

Fig.	CNH Part no.	Kongskilde Part no.	Quantity 1,2m/1,4m/1,6m	Description
1A		301014100	1	Section frame (1.2m)
1B		301015100	1	Section frame (1.4m)
1C		301016100	1	Section frame (1.6m)
2		301014052	1	Left plate of front roller
3		301014051	1	Right plate of front roller
4		300304058	10	Bolt M12x40 8.8 DIN933
6		300316021	36	Lock nut M12 DIN985
7		301010025	6	Bearing with housing
8		71302210405	12	Bolt M10x40 cl.8.8 DIN7991
9		300316020	19	Lock nut M10 DIN985
10		300407009	6	Seger ring 25x1,2 DIN471
11		301014010	4	Suspensions holder
12		300304056	8	Bolt M12x30 cl. 8.8 FZB DIN933
13		301010021	1	Steel rope
14		300066078	1	Bush
15		301014134	2	Plastic washer
16		300720649	1	Pin
17		301014054	1	Stainless steel plate - left
18		301014055	1	Stainless steel plate - right
19		300334036	12	Rivet 4,8x16
20		301014016	2	Link for tines frame
21		300323030	12	Spring pin 6x36 DIN1481
22		301010020	4	Pin d=20
23		300332034	8	Washer M20 FZB DIN126
24		101003152	20\25\28	Cpl. Germinator Pro tine (32x12)
25		101200231	20\25\28	Share cpl.
26		101003136	20\25\28	Clamp 50x13
27		300304711	20\25\28	Bolt M12x50 10.9 DIN603 DACROMET 320 grade A
28		300315003	20\25\28	Nut M12 cl.8.8 DIN934
29A		301014200	1	Tine frame (1,2m)
29B		301015200	1	Tine frame (1,4m)
29C		301016200	1	Tine frame (1,6m)
30		300304059	11	Bolt M12x45 cl. 8.8 DIN931
31A		301014060	1	Rear levelboard (1.2m)
31B		301015060	1	Rear levelboard (1.4m)
31C		301016060	1	Rear levelboard (1.6m)
32		301014136	1	Chain
33		301014138	4	Plate for roller bearing
34A		301014600		"B" roller L=1200
34B		301015600		"B" roller L=1400
34C		301016600		"B" roller L=1600
35A		301014800		Croskill roller L=1200
35B		301015800		Croskill roller L=1400
35C		301016800		Croskill roller L=1600
36A		300286500		Rotocrat roller L=1200
36B		300286600		Rotocrat roller L=1400
36C		300286700		Rotocrat roller L=1600
37		103000486		Rod right
38		103000487		Rod left
39A		300281900		"C" roller L=1200
39B		300282200		"C" roller L=1400
39C		300282500		"C" roller L=1600
40		300304066	1	Bolt M12x80 cl. 8.8 DIN931
41		301014130	1	Depth control holder
42		300332009	2	Washer M16 DIN126
43		300316023	2	Lock nut M16 cl.8 FZB DIN985
44		7002148764	1	U-bolt M16x110 (for tube 80X80)
45		301014131	1	Scale
46		300334027	2	Rivet 4x10 DIN7337
47		301014023	1	Bush with thread
48		300421002	2	Grease nipple M6
49		300323031	4	Spring pin 6x40 DIN1481
50		301014133	1	Bush
51		301014126	1	Trapezoidal bolt Tr24x5

Tab.7

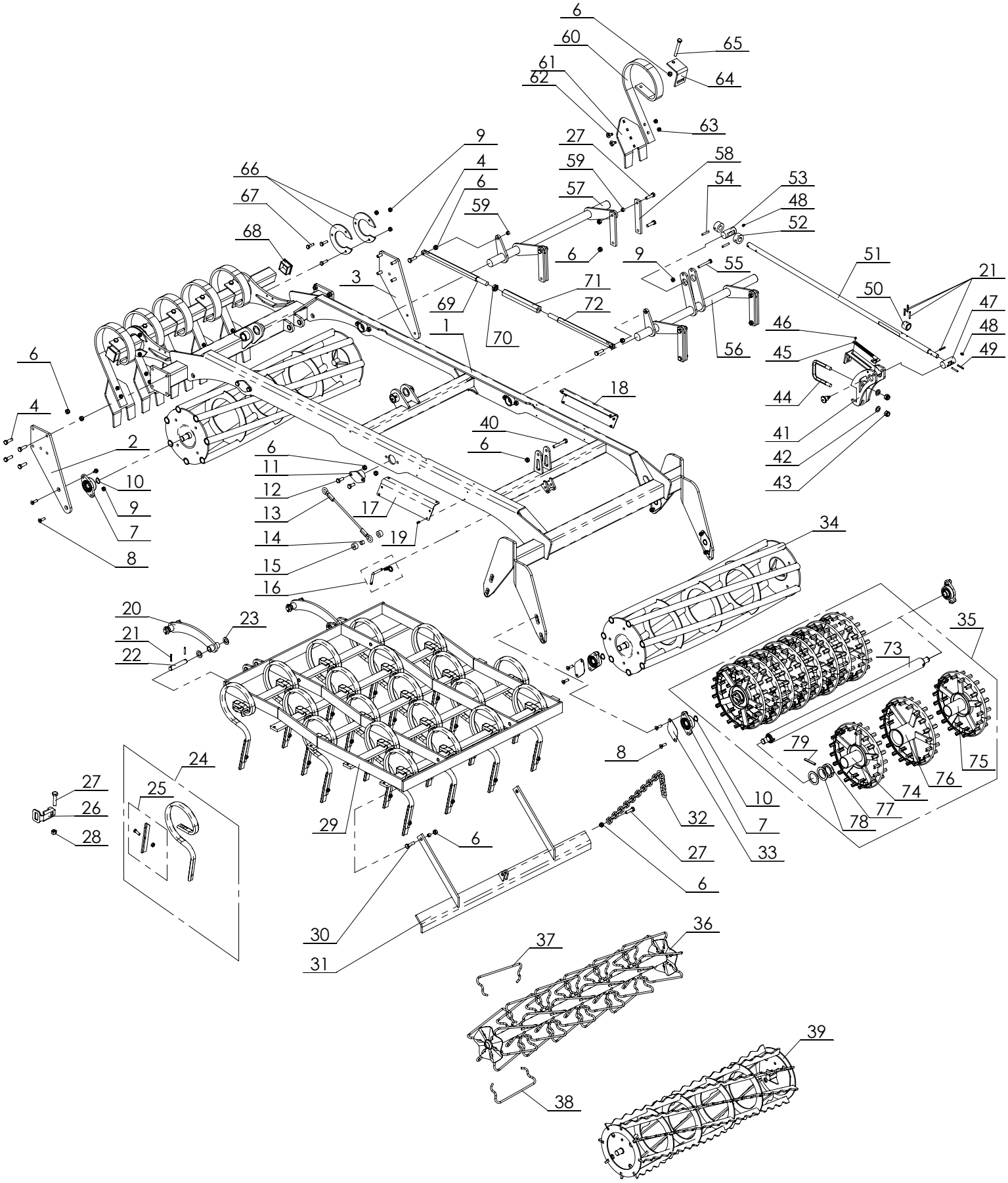
6
60
65
61
62
64
63
9
27
58
66
4
59
54
53
67
6
57
48
59
52
68
6
9
55
51
3
71
21
69
72
50
47
1
70
46
48
56
45
49
6
18
44
4
40
41
2
6
42
6
11
43
10
12
9
13
17
7
14
19
34
8
15
16
20
23
35
21
73
22
79
24
8
75
27
25
76
26
74
10
77
32
78
28
29
7
6
27
33
6
30
36
37
31
39
38

Tab.7 Date: 2017.08.01

Fig.	CNH Part no.	Kongskilde Part no.	Quantity 1,2m/1,4m/1,6m	Description
52		301014049	2	Sleeve
53		301014056	1	Bush wthout thread
54		200215714	2	Spring pin 8x45 DIN1481
55		300304042	1	Bolt 10x80 cl. 8.8 DIN931
56A		301014007	1	Rear suspensions of tine frame (1.2m)
56B		301015003	1	Rear suspensions of tine frame (1.4m)
56C		301016003	1	Rear suspensions of tine frame (1.6m)
57A		301014001	1	Front suspensions of tine frame (1.2m)
57B		301015001	1	Front suspensions of tine frame (1.4m)
57C		301016001	1	Front suspensions of tine frame (1.6m)
58		301014009	8	Flat bar
59		101200658	14	Bush
60		101000940	6\7\8	Vibro level tine 45x11
61		301018118	6\7\8	Working plate
62		300304165	12\14\16	Bolt M10x30 cl. 8.8 DIN603
63		300315001	12\14\16	Nut M10 DIN934
64		101155311	6\7\8	Clamp B=60x60
65		300304051		Bolt M12x100 cl.8.8 DIN931
66		301018140	4	Plate
67		300304036	6	Bolt M10x40 cl. 8.8 DIN933
68		301010022	2	Square insert
69		301014013	1	Parallelogram bolt
70		300315010	1	Nut M20x1,5 cl. 8.8 DIN936
71		301014015	1	Parallelogram middle bolt
72		301014014	1	Parallelogram left bolt
73A		301014820	1	Roller axle L=1200
73B		301015820	1	Roller axle L=1400
73C		301016820	1	Roller axle L=1600
74		301014825	4/5/6	Middle ring 350
75		301014827	2	Side ring 350
76		301014828	5/6/7	Ring 365
77		301014829	2	Bushing
78		301014830	4/2/0	Washer
79		500068143	2	Spring pin 10x70 DIN1481

Tab.8

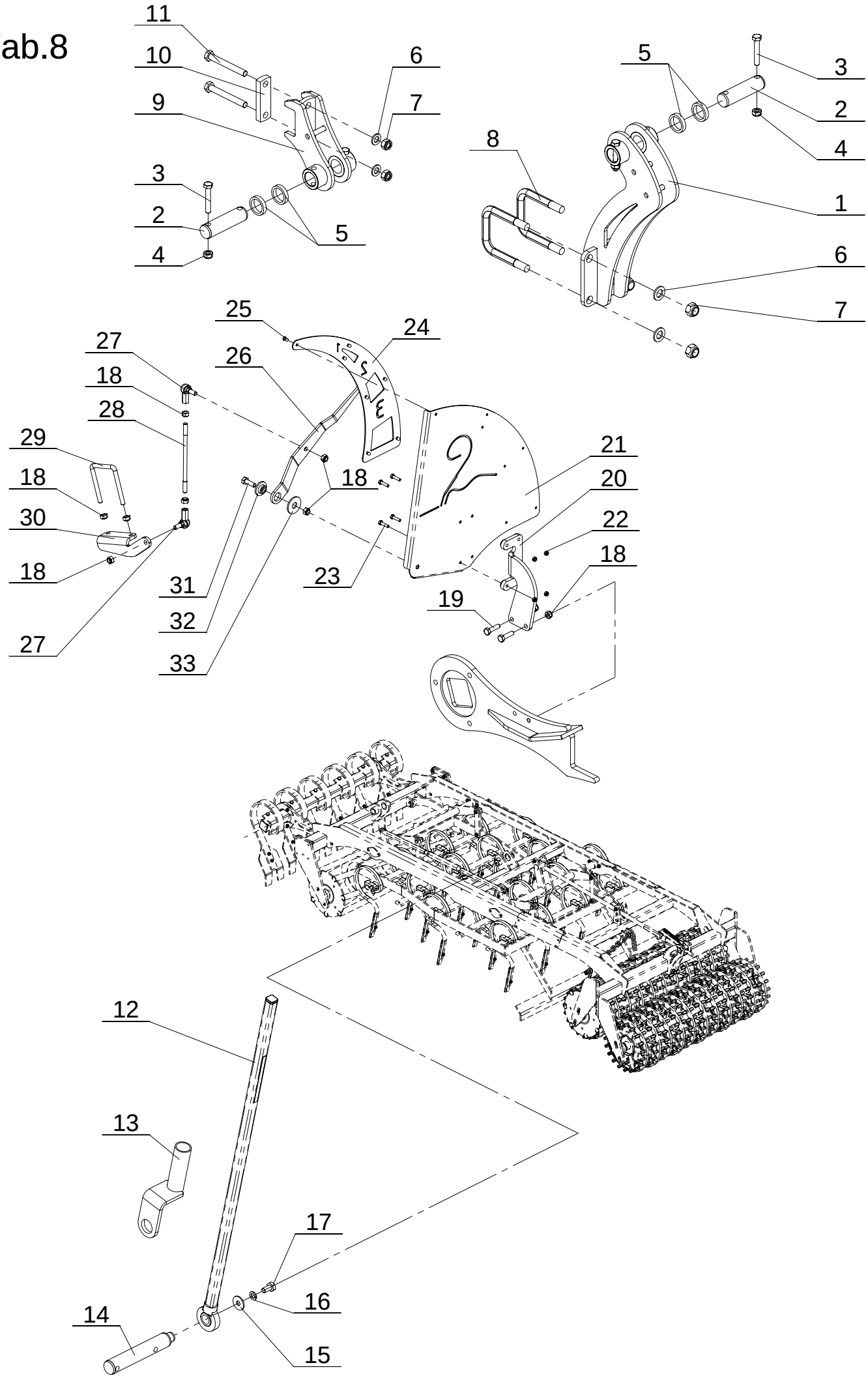
11
10
9
3
2
4
6
7
5
5
3
2
4
8
1
6
7
25
24
27
26
18
28
29
18
30
18
27
31
32
33
18
23
21
20
22
18
19
12
13
17
16
14
15

Front leveling board scale and cylinder holders

Tab.8 Date: 2017.08.01

Fig.	CNH Part no.	Kongskilde Part no.	Quantity	Description
1		301018111	1	Top holder
2		301010010	2	Pin L= 109
3		300304197	4	Bolt M10x60 DIN931
4		300316020	4	Lock nut M10 DIN985
5		373006243	4	Bushing D40x4,5 L=8
6		300332008	2	Washer M12 DIN126
7		300316021	2	Lock nut M12 cl.8.8 DIN985
8		7002148764	2	U-bolt M16x110
9		301018107	1	Bottom holder
10		301018117	1	Flat bar
11		300304051	2	Bolt M12x100 8.8 DIN931
12		301014030	1	Indicator
13		301014033	1	Indicator bracket
14		301014029	1	Indicator pin
15		300332043	1	Washer M10 DIN9021
16		300332021	1	Spring washer M10 DIN127B
17		300304031	1	Bolt M10x20 cl. 8.8 DIN933
18		300316027	8	Lock nut M8 DIN985
19		300304156	2	Bolt M8x30 cl. 8.8 DIN933
20		301018131	1	Scale holder
21		301018124	1	Support fol scale
22		300316025	4	Lock nut M5 DIN985
23		100323134	4	Bolt M5x12 cl. 8.8 DIN933
24		301018125	1	Scale
25		200217617	7	Rivet 4x12 DIN7337
26		301018126	1	Scale indicator
27		301018121	2	Joint M8
28		301018120	1	Rod
29		71000105501	1	U-bolt M8x77
30		301018119	1	Arm
31		300304155	1	Bolt M8x25 cl. 8.8 DIN933
32		301018127	1	Bush
33		300332044	1	Washer M12 DIN9021

Tab.9

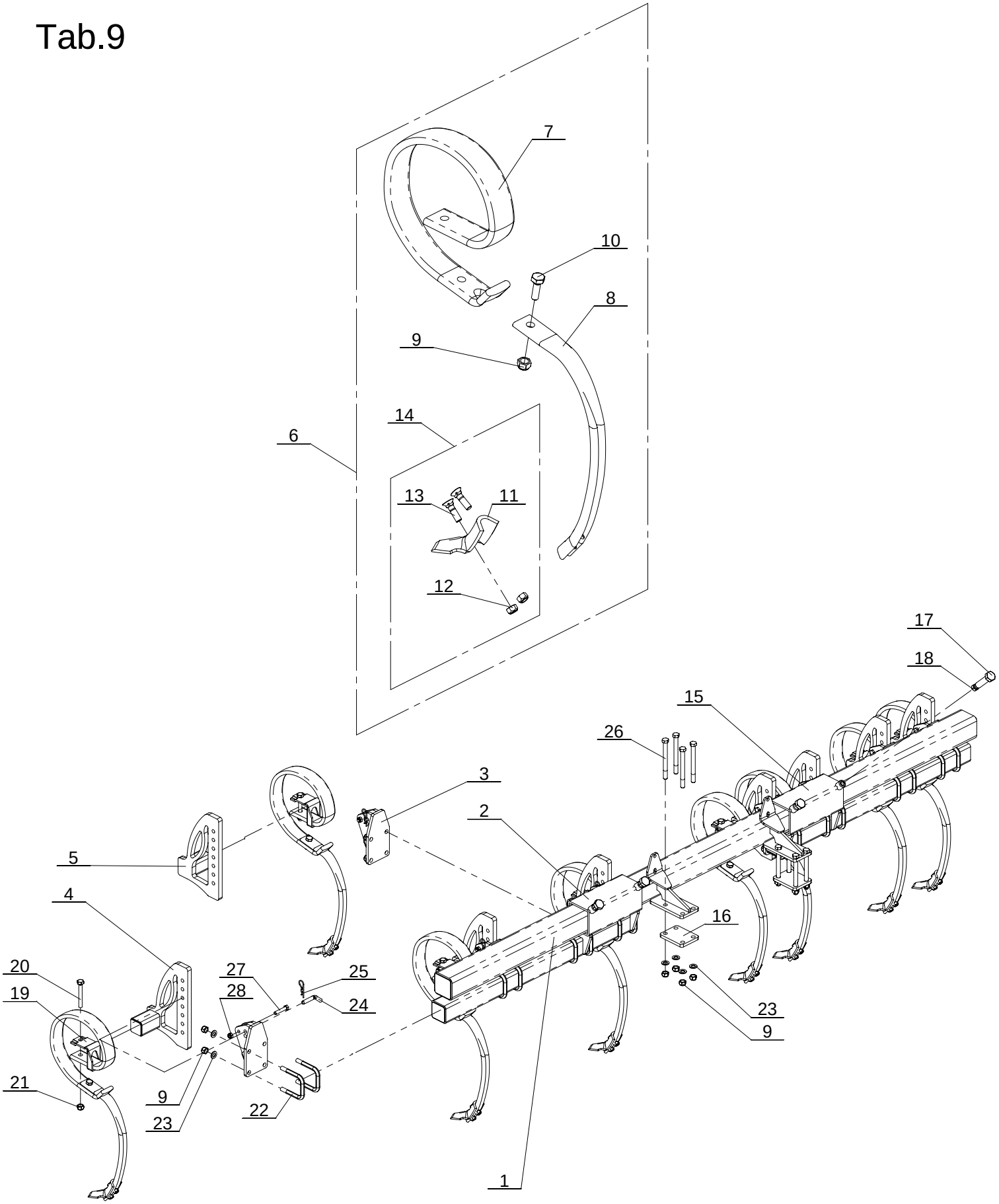
7
10
8
9
14
6
13
11
12
17
18
15
26
3
2
5
4
16
20
27
25
19
28
24
23
9
21
9
22
23
1

Tab.9 Date: 2017.12.04

Fig.	CNH Part no.	Kongskilde Part no.	Quantity	Description
1		301050005	1	Main beam
2		301050009	1	Left slide holder
3		301050014	8	Depth setting holder
4		301050017	4	Left tine holder
5		301050018	4	Right tine holder
6		101000992	8	VTH tine with 2 hole ultra goosefoot 70x6mm.
7		101000836	1	Spring
8		101000837	1	Stem
9		300316023	41	Lock nut M16 cl.8 FZB DIN985
10		300304093	1	Bolt M16x45
11			1	Ultra goosefoot 70x6mm (see item 14)
12			2	Nut (see item 14)
13			2	Bolt (see item 14)
14		101000551	1	Ultra goosefoot 70x6mm cpl. (1 x item 37 + 2 x item 12 + 2 x item 13)
15		301050010	1	Right slide holder
16		301050019	2	Mounting plate
17		300304219	4	Bolt M16x55 DIN933
18		300315006	4	Nut M16 DIN934
19		101000839	8	Clamp for VTH tine 630
20		100306168	8	Bolt M16x1,5x110 10.9 DIN960
21		100316088	8	Lock nut M16x1,5 cl.8 DIN980
22		7002148764	16	U-bolt M16x110 (for tube 80X80)
23		300332009	40	Washer M16 FZB DIN126
24		104000013	8	Pin 14mm
25		300333067	8	Cotter B48 FZB DIN11024
26		300304250	8	Bolt M16x170 cl. 8.8 DIN931
27		300304062	8	Bolt M12x60 8.8 Din931
28		300316021	8	Lock nut M12

Tab.10

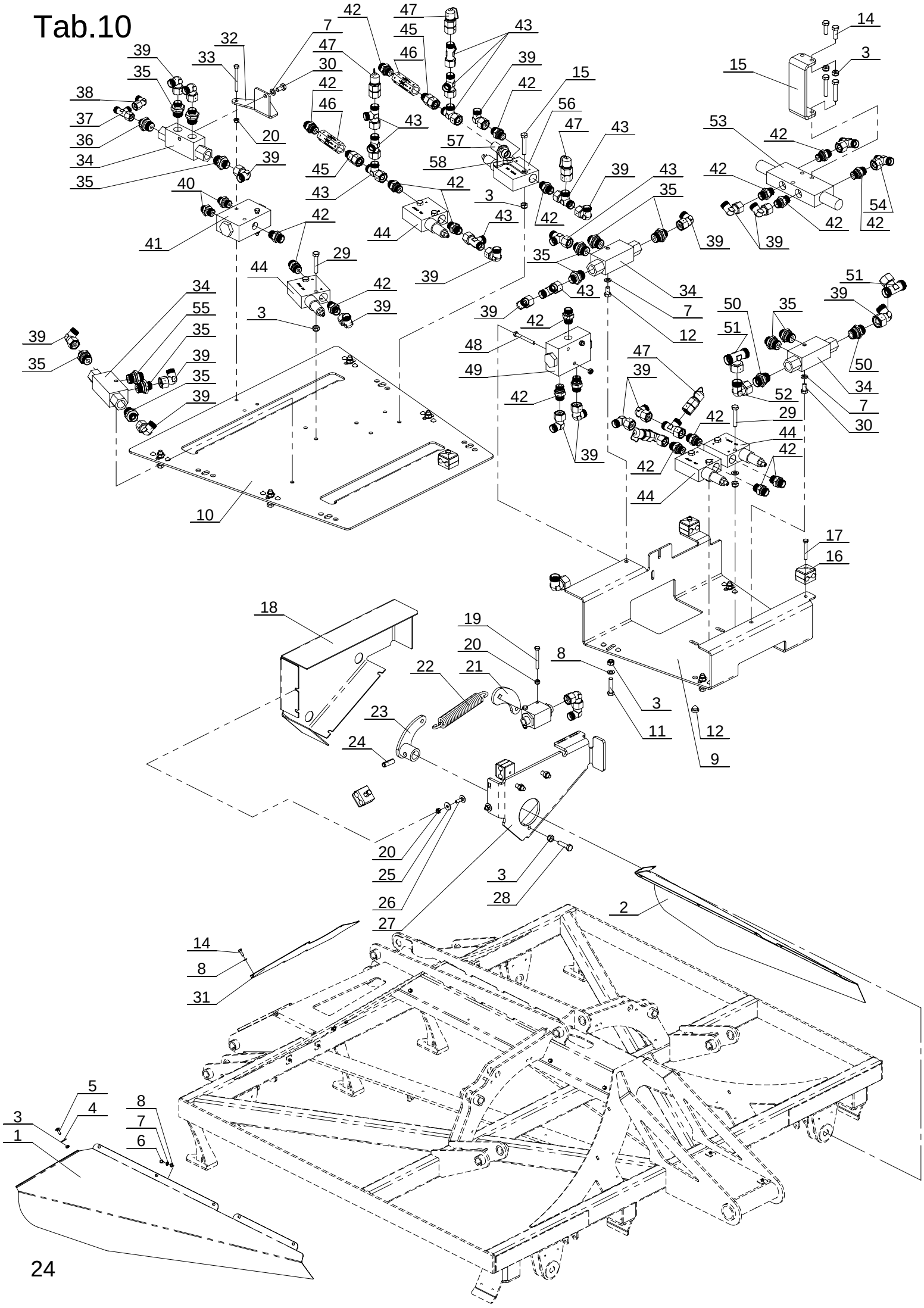

14
3
15
53
42
54
42
42
39
39
42
47
45
46
43
39
42
15
56
47
43
57
58
39
43
35
39
35
34
7
12
42
47
39
43
39
42
48
49
42
39
47
39
42
29
44
42
44
42
39
51
39
50
35
51
50
34
52
7
30
29
44
42
42
44
32
33
7
30
39
35
38
37
36
34
35
20
39
40
41
42
29
44
42
39
3
34
55
35
39
35
39
39
35
10
17
16
18
19
20
21
22
23
24
8
3
11
12
9
20
25
26
27
3
28
2
14
8
31
5
4
3
1
8
7
6

Main hydraulic system - valves and fittings

Tab.10 Date: 2017.12.04

Fig.	CNH Part no.	Kongskilde Part no.	Quantity	Description
1		301011081	1	Left cover
2		301011080	1	Right cover
3		300316027	33	Lock nut M8 cl. 8.8 DIN985
4		7000602447	4	Washer M8 DIN126
5		300304191	4	Bolt M8x25 cl. 8.8 DIN603
6		300304150	10	Bolt M8x12 cl. 8.8 DIN933
7		300332025	10	Washer M8 DIN127B
8		300332039	26	Washer M8 DIN126
9		301010065	1	Rear valves plate
10		301010064	1	Front valves plate
11		300304157	8	Bolt M8x35 cl. 8.8 DIN 933
12		300081791	16	Bumper
14		300304155	6	Bolt M8x25 cl. 8.8 DIN933
15		301010063	1	Valve holder
16		500031594	3	Hose double holder
17		7000602216	3	Bolt M6x45 cl. 8.8 DIN931
18		301010055	1	Ball valve cover
19		300304136	3	Bolt M6x50 cl. 8.8 DIN931
20		300316026	3	Lock nut M6 DIN985
21		301010058	1	Plate
22		371002803	1	Spring
23		301010057	1	Lever
24		300323012	1	Spring pin 10x30
25		300332052	4	Washer M6 DIN126
26		300304187	4	Bolt M6x20 cl. 8.8 DIN603
27		301010059	1	Ball valve bracket
28		300304156	3	Bolt M8x30 cl. 8.8 DIN933
29		300304159	10	Bolt M8x45 cl. 8.8 DIN933
30		300304152	4	Bolt M8x16 cl. 8.8 DIN933
31		301011079	1	Front cover
32		301010066	1	VBPDE 1/2" L valve holder
33		300304146	2	Bolt M6x60 cl. 8.8 DIN931
34		330140001	4	Double pilot operated check valve
35		300007689	12	Fitting 1/2" / M18x1,5
36		300008303	1	Fitting 1/2" / M14x1,5
37		300008314	1	T-fitting M14x1,5
38		300007696	1	L-fitting M14x1,5
39		300000867	16	L-fitting M18x1,5
40		300007695	2	Fitting 3/8" / M14x1,5
41		7210000135	1	Steel Flow Divider DFL 6-10L/min.
42		71202079060	16	Fitting 3/8" / M18x1,5
43		7210000165	12	L-fitting M18x1,5
44		330140004	4	Sequence valve adjusted on 170 bar VSQAPP 3/8"
45		330130005	2	Fitting M18x1,5
46		330140003	2	Body + Flow control valve adjusted on 17L/min. VRD 380 - D
47		330130004	5	Test point B715-MT01-912L (M18x1,5 / M16x2)
48		300304145	2	Bolt M6x55 cl. 8.8 DIN931
49		330140005	1	Steel Flow Divider DFL 10-20 L/min.
50		300008369	2	Fitting 1/2" / M22x1,5
51		300008370	2	T-fitting M22x1,5
52		300008371	2	L-fitting M22x1,5
53		330140002	1	Overcenter valve VBCD3/8"DE-A (V0422)
54		300037400/1	2	T-fitting M18x1,5
55		330130007	1	Fitting d=0,8mm 1/2" / M18x1,5
56		330140007	1	Sequence valve adjusted on 100 bar VSQAPP 3/8"
57		71202079340	1	12L Bulkhead connector M18x1,5
58		301044642	1	Bulkhead connector bracket

Tab.11

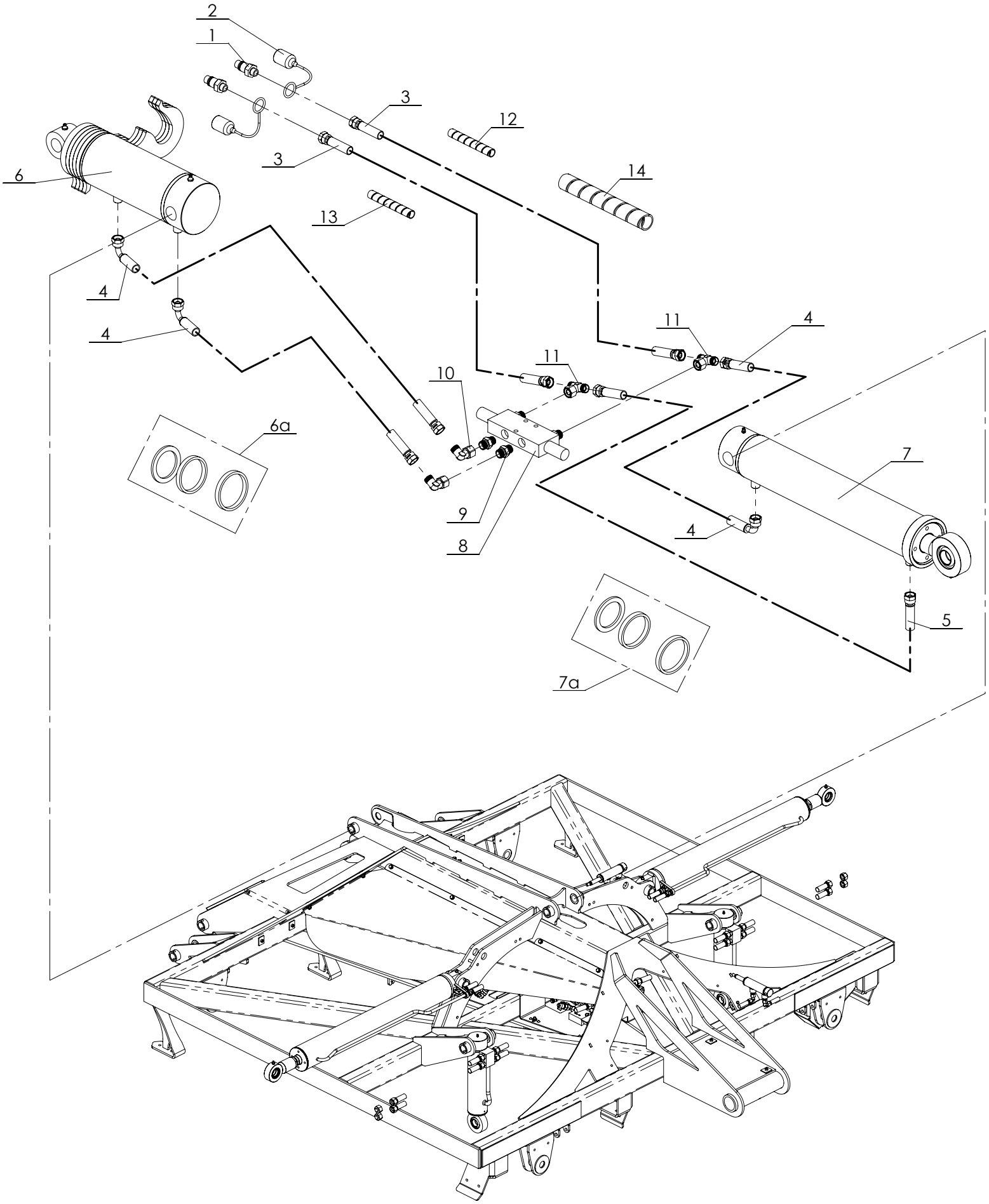

Drawbar and chassis hydr. system

Tab.11 Date: 2017.08.01

Fig.	CNH Part no.	Kongskilde Part no.	Quantity	Description
1		7210000125	2	Quick coupling M18x1,5
2		7000406140	2	Dust coupling - black
3		301044054	2	Hydraulic hose M18x1,5 L=5500
4		330120007	3	Hydraulic hose M18x1,5 L=750
5		330120006	1	Hydraulic hose M18x1,5 L=1650
6		301044032	1	Drawbar hydraulic cylinder cpl.
6a		301044018		Sealing kit for drawbar cylinder
7		330100001	1	Hydraulic cylinder for chassis
7a		301044046		Sealing kit for chassis cylinder
8		330140002	1	Overcenter valve VBCD3/8"DE-A (V0422)
9		71202079060	4	Fitting 3/8" / M18x1,5
10		300000867	2	L-fitting M18x1,5
11		300037400/1	2	T-fitting M18x1,5
12		330190021	1	Helix protection black 3/8" L=100mm
13		330190022	1	Helix protection black 3/8" L=200mm
14		330190011	1	Helix protection kit HG-40 L=350mm

Tab.12

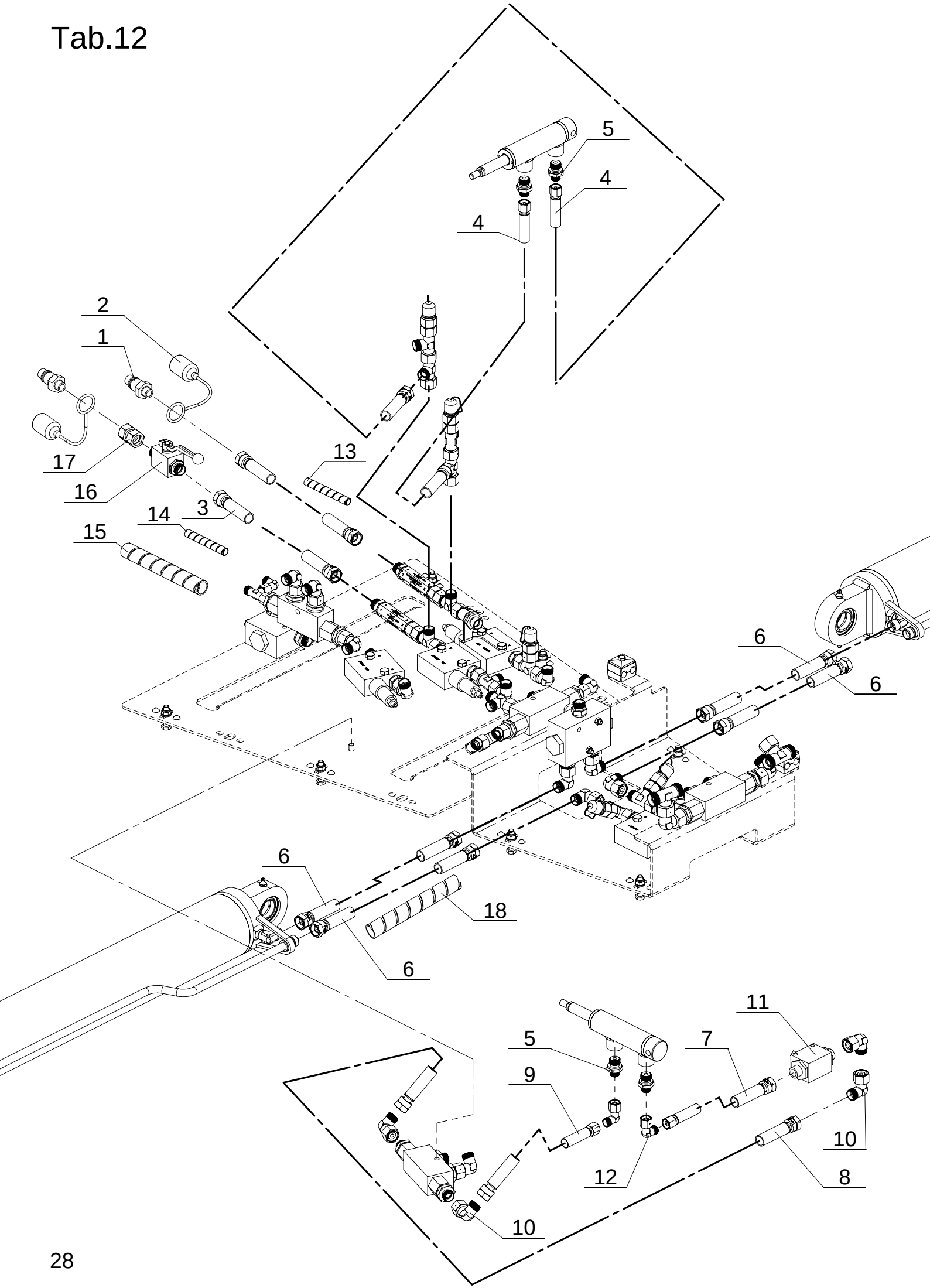

Hooks and transport lock hydr. system

Tab.12 Date: 2017.12.04

Fig.	CNH Part no.	Kongskilde Part no.	Quantity	Description
1		7210000125	2	Quick coupling
2		7000600399	2	Dust coupling - red
3		301044054	2	Hydraulic hose M18x1,5 L=5500
4		330120009	2	Hydraulic hose M14x1,5/ M18x1,5 L=1000
5		300007695	2	Fitting 3/8" / M14x1,5
6		330120010	4	Hydraulic hose M18x1,5 L=700
7		330120008	1	Hydraulic hose M14x1,5/ M18x1,5 L=2100
8		330120018	1	Hydraulic hose M18x1,5 L=2300
9		330120015	1	Hydraulic hose M18x1,5 L=2450
10		300000867	4	L-fitting M18x1,5
11		330140006	1	Ball valve M18x1,5 (RS2-12L)
12		300007696	2	L-fitting M14x1,5
13		330190023	1	Helix protection red L=100
14		330190024	1	Helix protection red L=200
15		330190012	1	Helix protection HG-63 L= 800mm
16		330140006	1	Bal valve M18x1,5
17		71202079361	1	Fitting M18x1,35
18		330190009	2	Helix protection HG-40 L=550mm

Tab.13

Germinator Pro 5400

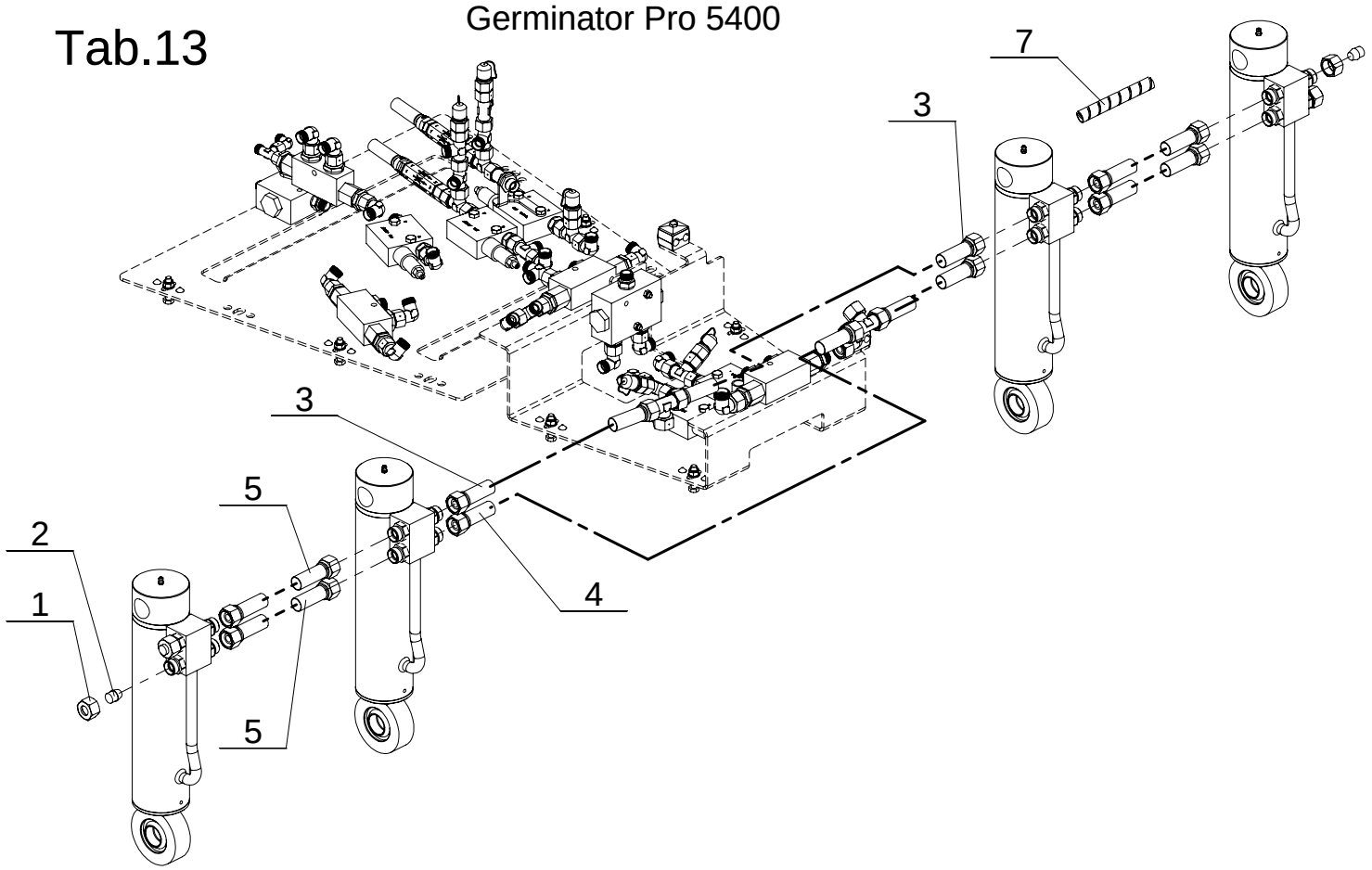

Germinator Pro 6200

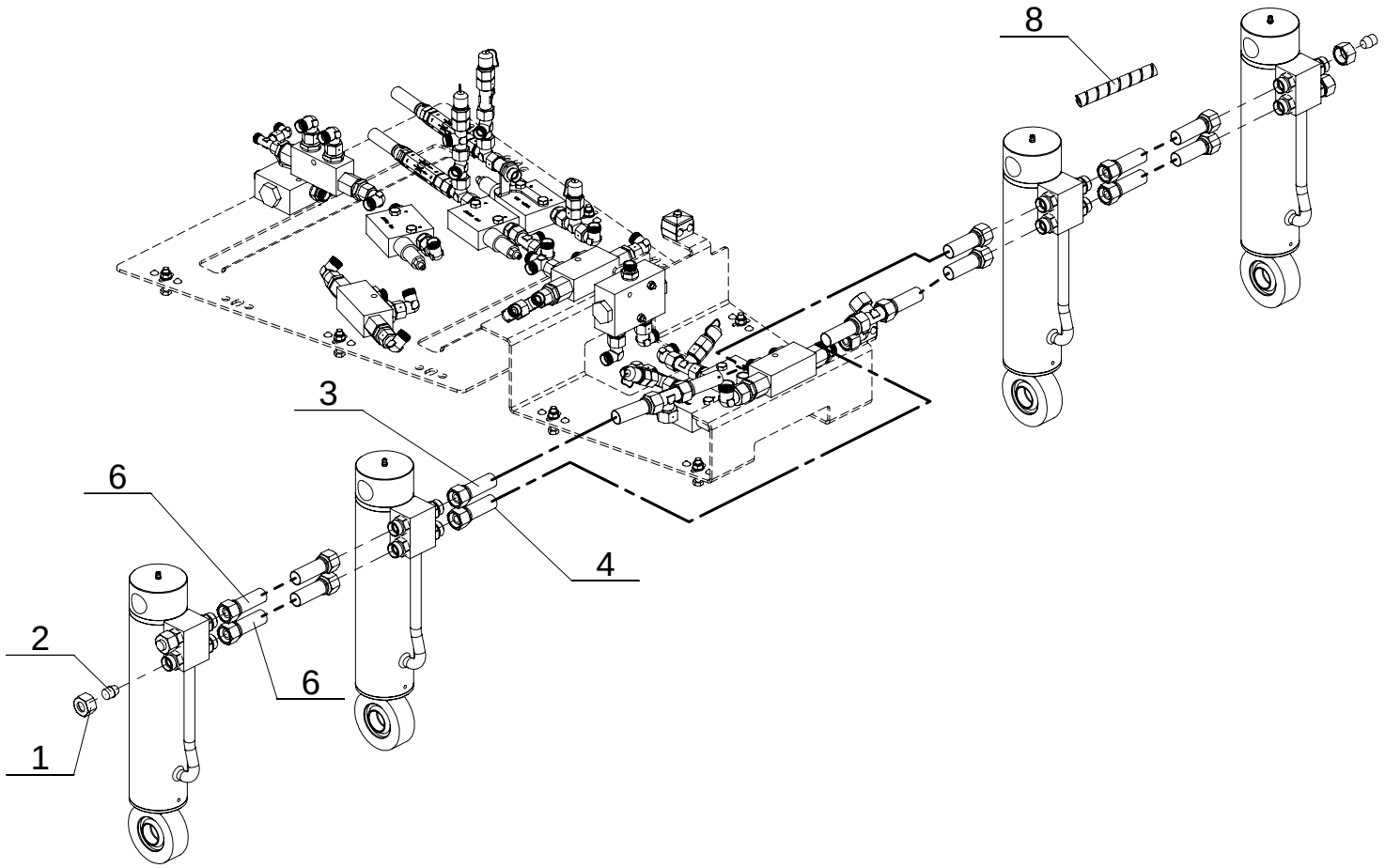

Tab.13 Date: 2017.08.01

Fig.	CNH Part no.	Kongskilde Part no.	Quantity 5400/6200	Description
1		301044077	4/4	Nut M22x1,5
2		301044076	4/4	Plug
3		330120013	2/2	Hydraulic hose M22x1,5 L=600
4		330120012	2/2	Hydraulic hose M22x1,5 L=840
5		330120011	4/0	Hydraulic hose M22x1,5 L=1900
6		330120014	0/4	Hydraulic hose M22x1,5 L=2100
7		330190014	2/0	Helix protection HG-50 L=1700mm
8		330190016	0/2	Helix protection HG-50 L=1900mm

Tab.14

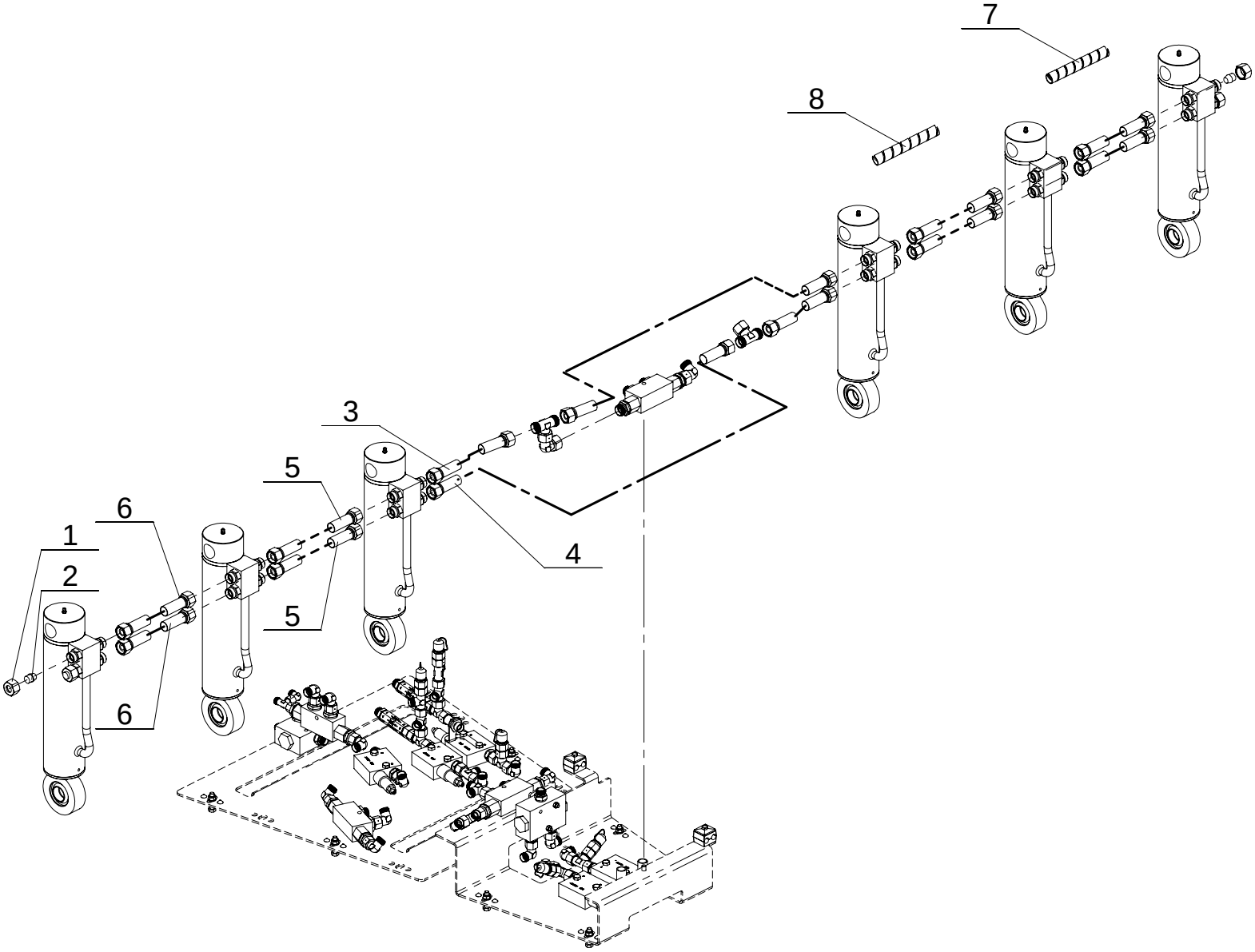

Tab.14 Date: 2017.08.01

Fig.	CNH Part no.	Kongskilde Part no.	Quantity 7900	Description
1		301044077	4	Nut M22x1,5
2		301044076	4	Plug
3		330120013	2	Hydraulic hose M22x1,5 L=600
4		330120012	2	Hydraulic hose M22x1,5 L=840
5		330120011	4	Hydraulic hose M22x1,5 L=1900
6		330120001	4	Hydraulic hose M22x1,5 L=1250
7		330190015	2	Helix protection HG-50 L=1050mm
8		330190014	2	Helix protection HG-50 L=1700mm

Tab.1 5

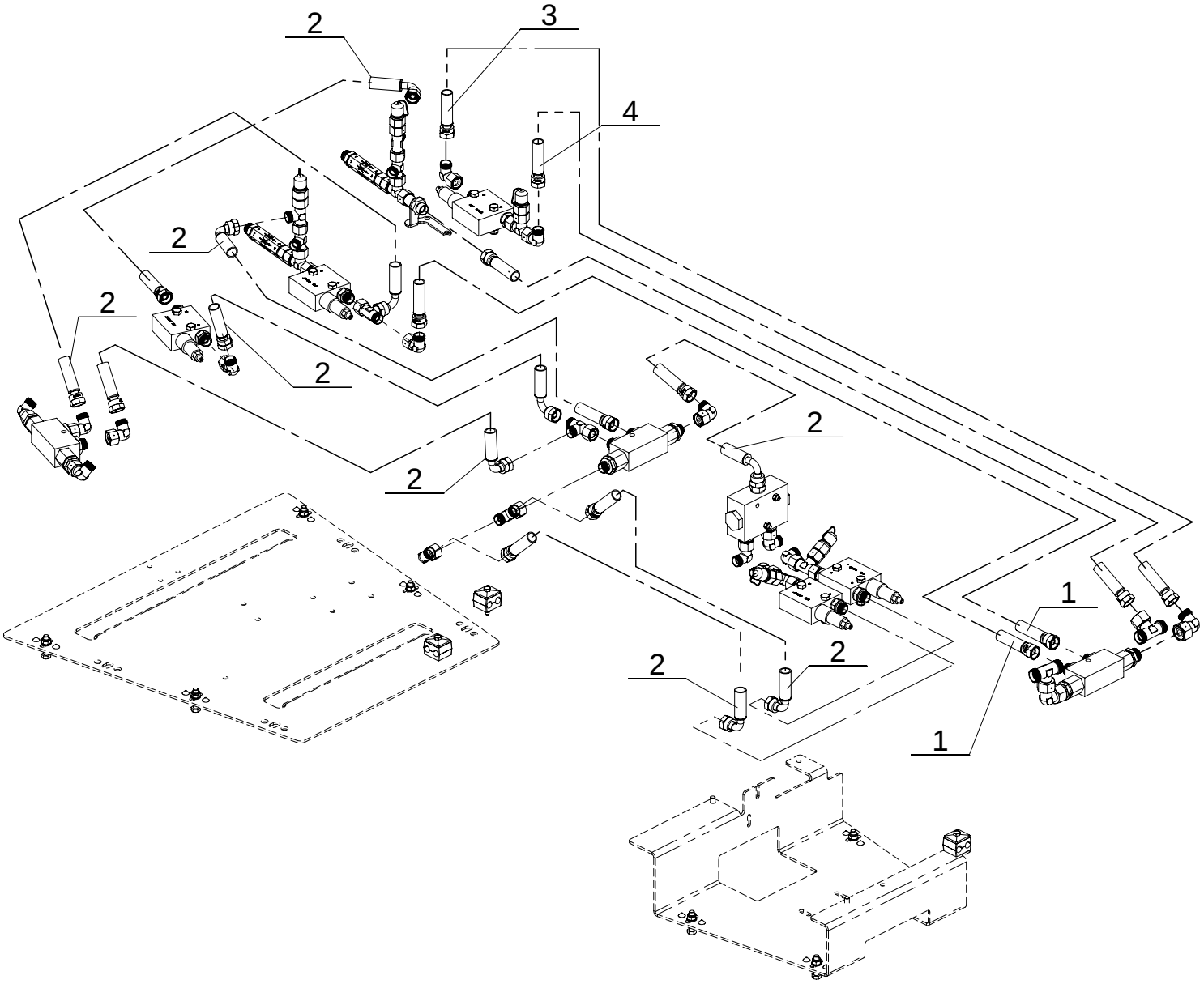

Main hydraulic system - hoses

Tab.15 Date: 2017.08.01

Fig.	CNH Part no.	Kongskilde Part no.	Quantity	Description
1		330120016	2	Hydraulic hose M18x1,5 45˚ L=750
2		330120005	8	Hydraulic hose M18x1,5 90˚ L=500
3		330120052	1	Hydr. hose 3/8" M18x1,5 45° nut / M22x1,5 0° nut L=900
4		330120051	1	Hydr. hose 3/8" M18x1,5 0° nut. / M22x1,5 0° outside thread L=750

Tab.16

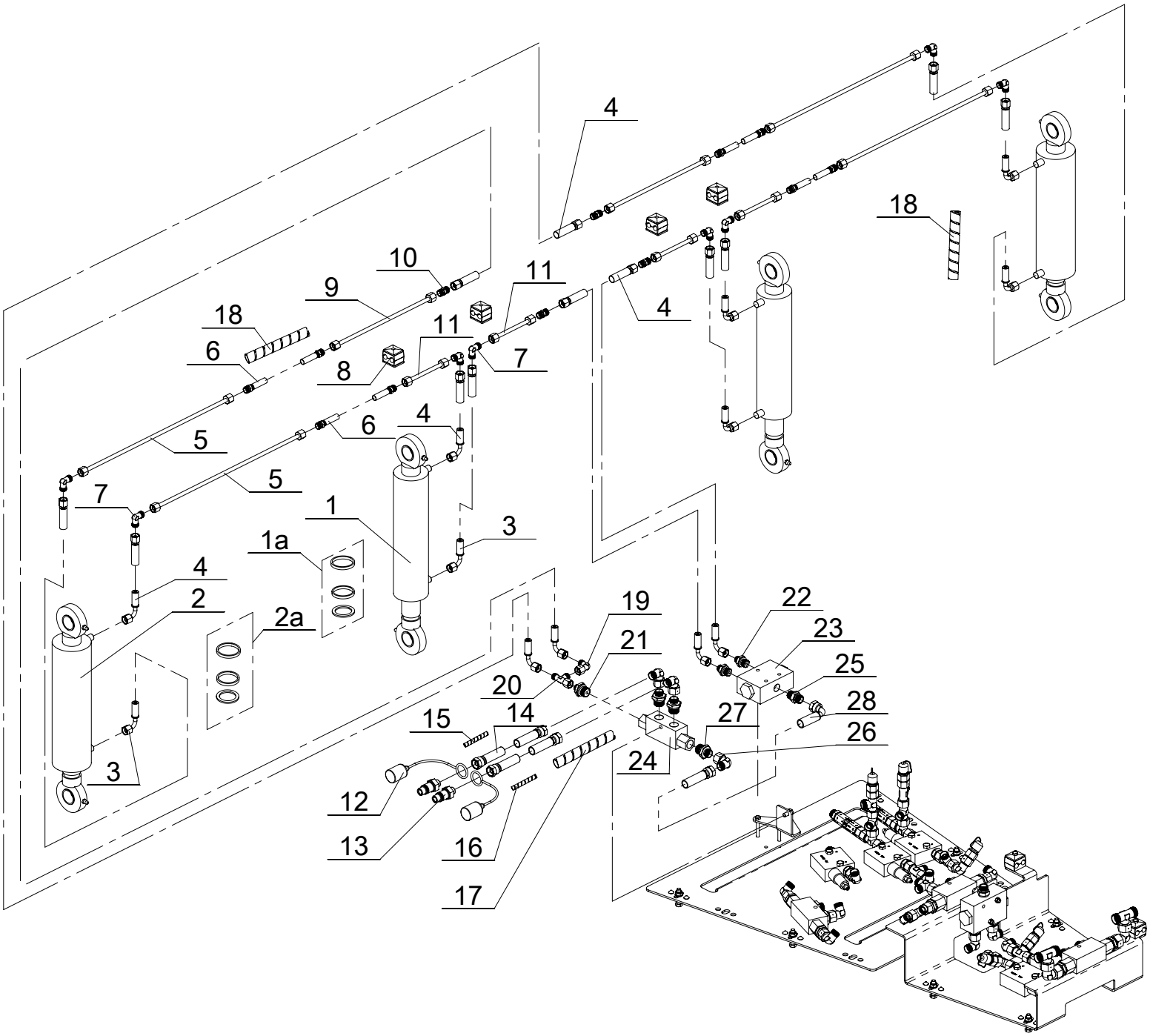
4
18
10
9
11
4
18
6
11
8
7
4
6
5
5
7
1
3
1a
4
2
2a
19
22
23
21
25
20
28
15
14
27
26
24
3
12
13
16
17

Front leveling board hydr. system GP5400 and GP6200

Tab.16 Date: 2017.08.01

Fig.	CNH Part no.	Kongskilde Part no.	Quantity 5400/6200	Description
1		301044001	2/2	Hydraulic cylinder
1a		301044002		Seal kit for 301044001
2		301044003	2/2	Hydraulic cylinder
2a		301044004		Seal kit for 301044003
3		330120003	4/4	Hydraulic hose M14x1,5 L=1025
4		330120002	8/8	Hydraulic hose M14x1,5 L=750
5A		330150006	4/0	Hydraulic pipe L=450
5B		330150007	0/4	Hydraulic pipe L=625
6		330120004	4/4	Hydraulic hose M14x1,5 L=750
7		330130003	8/8	L-fitting M14x1,5
8		301044222		Double pipe holder
9		330150002	2/2	Hydraulic pipe L=300
10		330130006	4/4	Fitting M14x1,5
11		330150001	4/4	Hydraulic pipe L=120
12		7000600401	2/2	Dust coupling - blue
13		7210000125	2/2	Quick coupling M18x1,5
14		301044054	2	Hydraulic hose M18x1,5 L=5550
15		330190019	1/1	Helix protection 3/8" L=100
16		330190020	1/1	Helix protection 3/8" L=200
17		330190010	1/1	Helix protection HG-40 L=800
18		330190008	6/6	Helix protection HG-32 L=600
19		300007696	1/1	L-fitting M14x1,5
20		300008314	1/1	T-fitting M14x1,5
21		300008303	1/1	Fitting 1/2" - M14x1,5
22		300007695	2/2	3/8" - M14x1,5
23		7210000135	1/1	Hydraulic Splitter DFL 6-10
24		330140001	1/1	Check valve VBPDE 1/2" L (V0030)
25		71202079060	1/1	Fitting 3/8" - M18x1,5
26		300000867	3/3	L-fitting M18x1,5
27		300007689	3	Fitting M18x1,5
28		330120005	1	Hydraulic hose M18x1,5 L=500

Tab.17

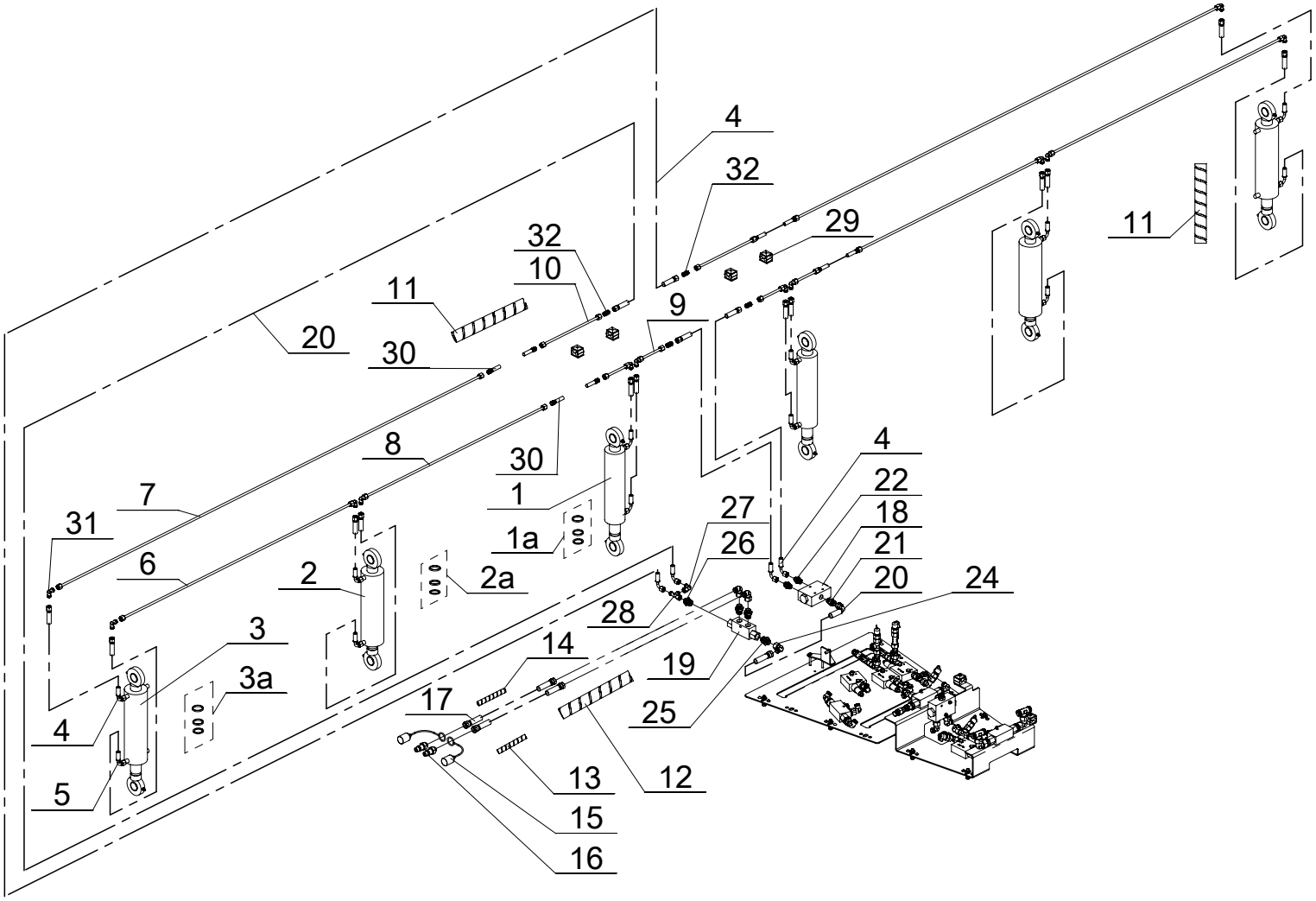
4
32
29
11
32
10
11
9
20
30
8
30
4
22
7
1
27
18
31
1a
26
21
6
2
2a
20
24
28
3
14
19
3a
17
25
4
13
12
5
15
16

Front leveling board hydr. system GP7900

Tab.17 Date: 2017.12.04

Fig.	CNH Part no.	Kongskilde Part no.	Quantity 7900	Description
1		301044001	2	Hydraulic cylinder
1a		301044002		Seal kit for 301044001
2		301044003	2	Hydraulic cylinder
2a		301044004		Seal kit for 301044003
3		301044005	2	Hydraulic cylinder
3a		301044006		Seal kit for 301044006
4		330120002	10	Hydraulic hose M14x1,5 L=750
5		330120003	4	Hydraulic hose M14x1,5 L=1025
6		330150004	2	Hydraulic pipe L=1200
7		330150005	2	Hydraulic pipe L=2200
8		330150003	2	Hydraulic pipe L=940
9		330150001	2	Hydraulic pipe L=120
10		330150002	2	Hydraulic pipe L=300
11		330190008	8	Helix protection HG-32 L=600
12		330190010	1	Helix protection HG-40 L=800
13		330190019	1	Helix protection 3/8" L=100
14		330190020	1	Helix protection 3/8" L=200
15		7000600401	2	Dust coupling - blue
16		7210000125	2	Quick coupling M18x1,5
17		301044054	2	Hydraulic hose M18x1,5 L=5550
18		7210000135	1	Hydraulic Splitter DFL 6-10
19		330140001	1	Check valve VBPDE 1/2" L (V0030)
20		330120005	1	Hydraulic hose M18x1,5 L=500
21		71202079060	1	Fitting 3/8" - M18x1,5
22		300007695	2	3/8" - M14x1,5
24		300000867	3	L-fitting M18x1,5
25		300007689	3	Fitting M18x1,5
26		300008303	1	Fitting 1/2" - M14x1,5
27		300007696	1	L-fitting M14x1,5
28		300008314	1	T-fitting M14x1,5
29		301044222		Double pipe holder
30		330120004	4	Hydraulic hose M14x1,5 L=750
31		330130003	12	L-fitting M14x1,5
32		330130006	4	Fitting M14x1,5

Tab.18

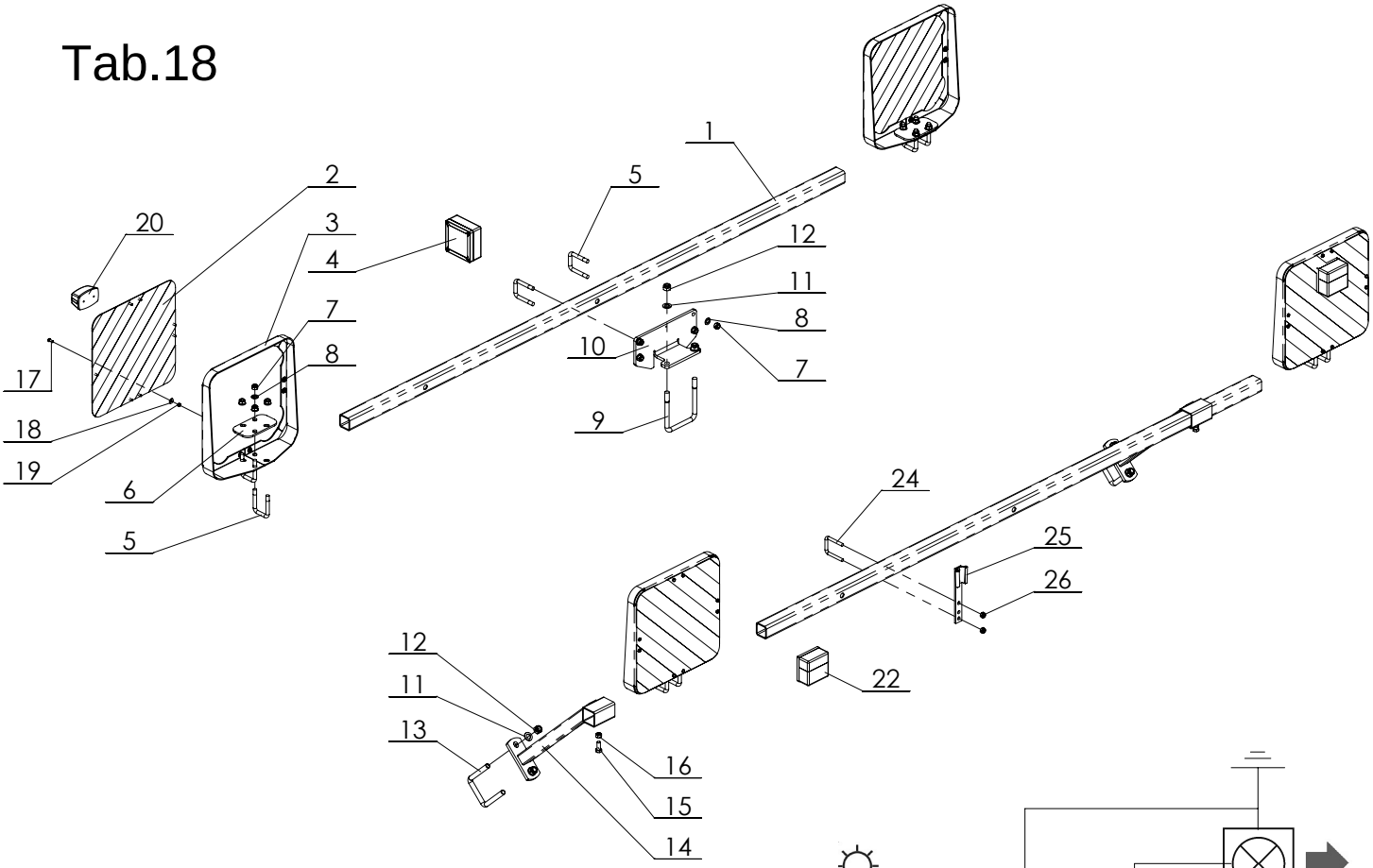
1
2
3
4
5
6
7
8
9
10
11
12
13
14
15
16
17
18
19
20
22
24
25
26

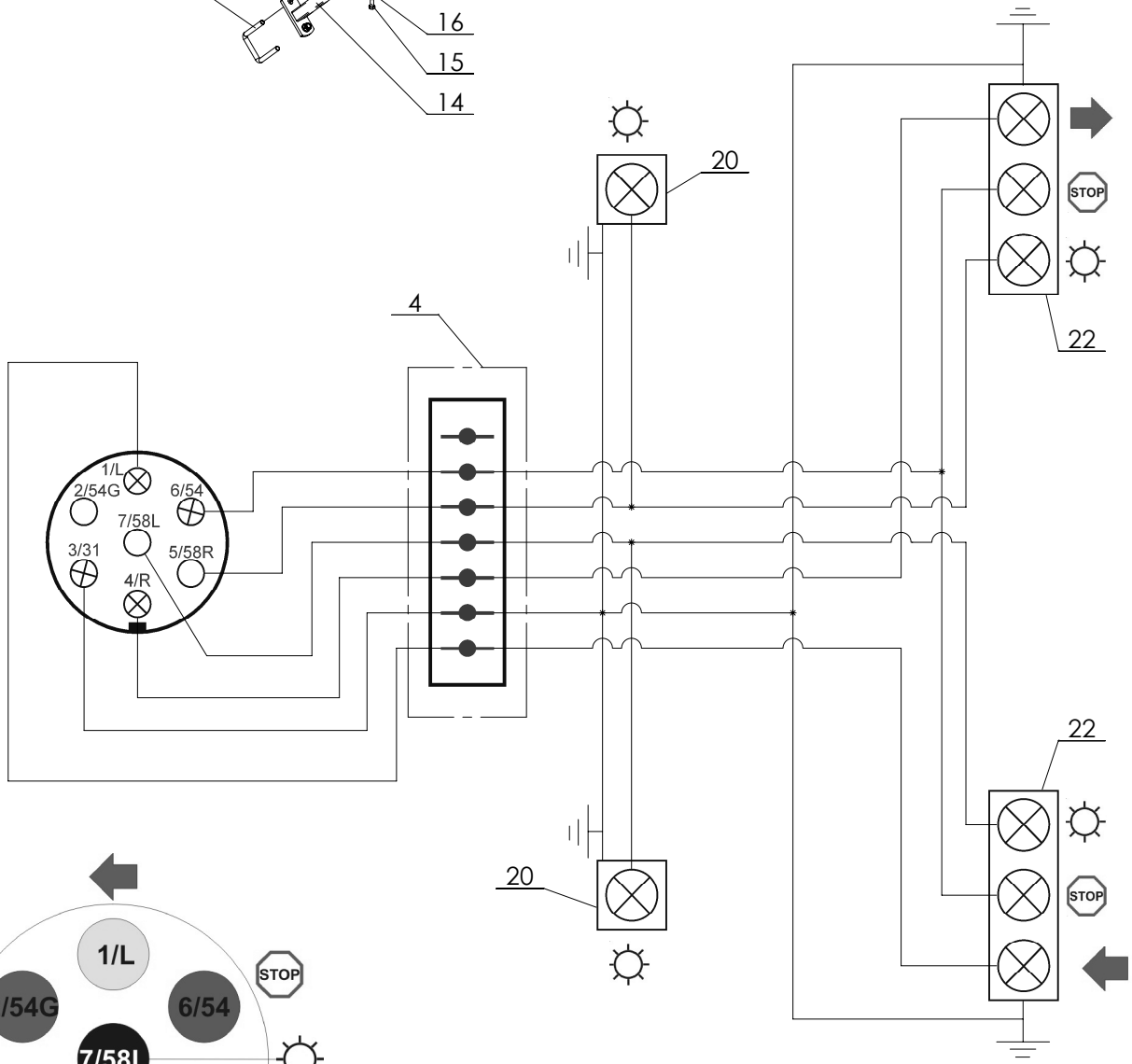
4
20
22
STOP
1/L
2/54G
6/54
7/58L
3/31
5/58R
4/R

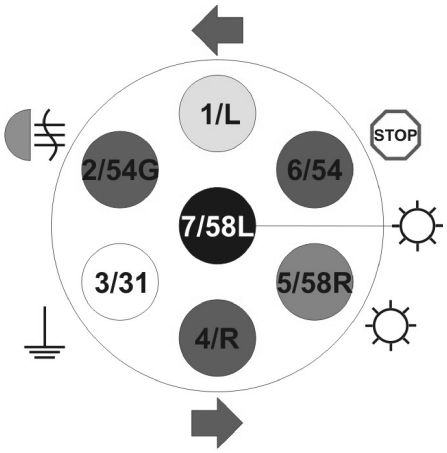
1/L
STOP
2/54G
6/54
7/58L
3/31
5/58R
4/R

Standard light kit

Tab.18 Date: 2017.08.01

Fig.	CNH Part no.	Kongskilde Part no.	Quantity	Description
1		7201014471	2	Pipe
2		330220003		Set of 4 warning plates with lights and electric wires
3		7203307002	4	Warning plate frame
4		7000603072	1	Electrical box
5		7002156661	10	U-bolt M12x81
6		372006209	4	Plate
7		300316021	20	Lock nut M12 cl. 8.8 DIN985
8		300332008	20	Washer M12 DIN126
9		300007474	1	U-bolt M16x150
10		372005185	1	Light holder
11		300332009	6	Washer M16 DIN126
12		300316023	6	Lock nut M16 cl. 8.8 DIN985
13		7002156620	2	U-bolt M16x124
14		301032101	2	Light holder
15		300304056	2	Bolt M12x30 cl. 8.8 DIN933
16		300315003	2	Nut M12 DIN934
17		300304139	32	Bolt M6x16 cl. 8.8 DIN933
18		300332052	64	Washer M6 DIN9021
19		300316026	32	Lock nut M6 DIN985
20		330220001	2	Front lamp
21		330220002	1	Glas for front lamp
22		372175100	2	Rear lamp
23		372003959	1	Glas for rear lamp
24		7002148874	1	U-bolt M10x75
25		300000633	1	Warning table holder
26		300316020	2	Lock nut m10 cl. 8.8 DIN985

Tab. 19 Light kit for French market

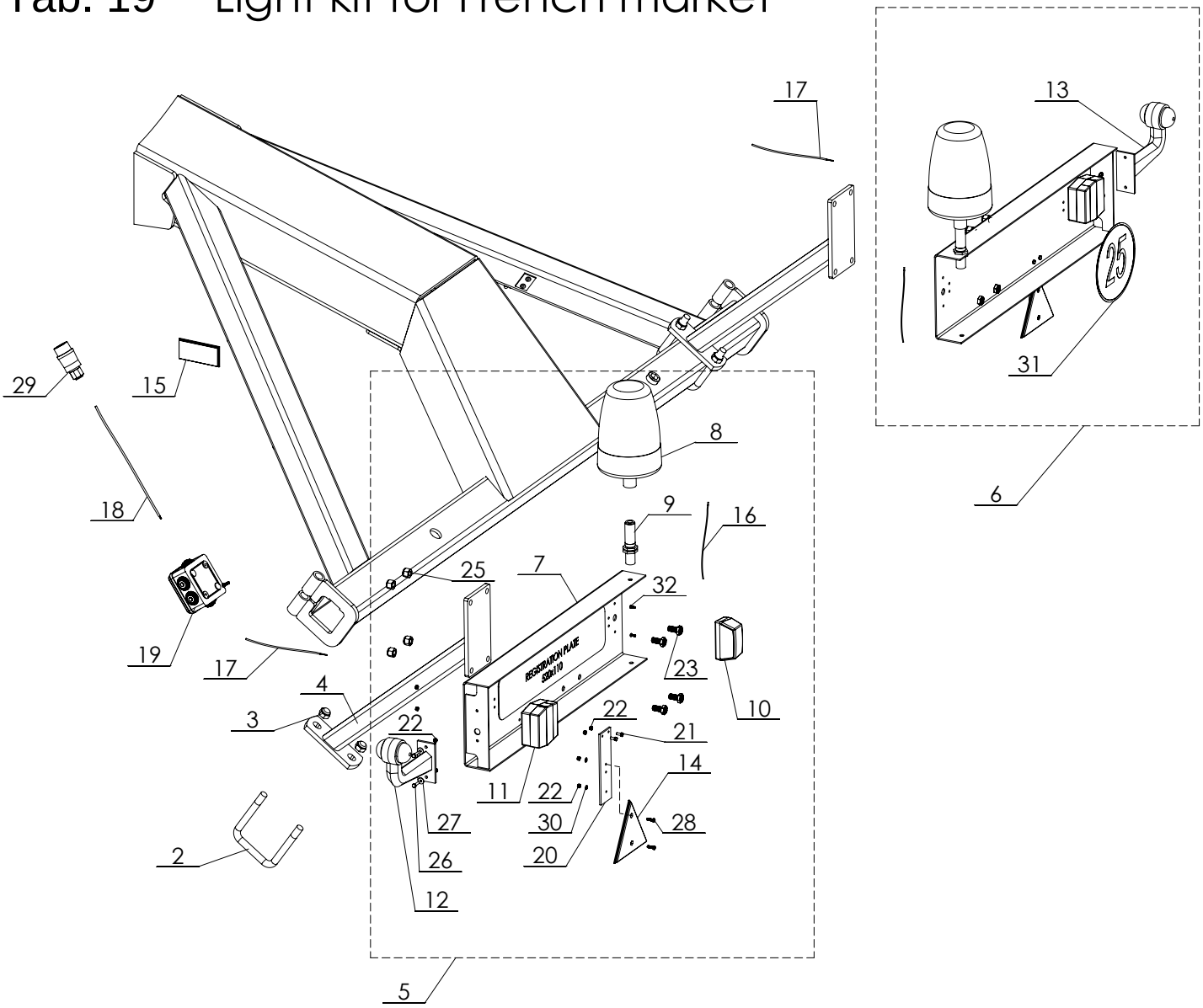

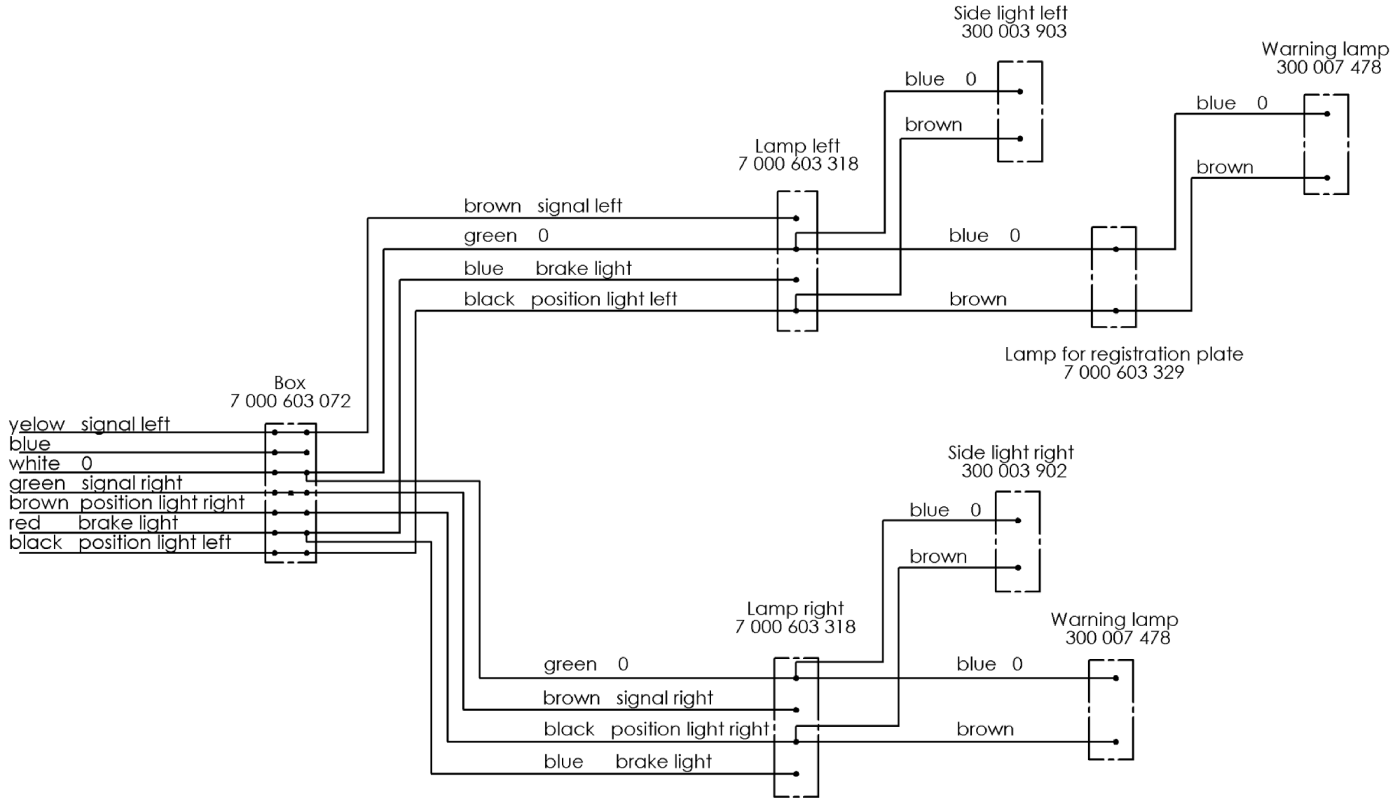

Light kit for French market

Tab.19 Date: 2017.12.04

Fig.	CNH Part no.	Kongskilde Part no.	Quantity	Description
1		301000601	1	Light kit cpl.
2		7002156620	2	U-bolt
3		300316023	4	Lock nut M16 DIN985
4		301010033	2	Light holder
5		300007512	1	Light kit left
6		300007511	1	Light kit right
7		300007498	2	Light plate
8		300007478	2	Warning light
9		300007477	2	Warning light holder
10		7000603329	1	Number plate light
11		7000603318	2	Rear light
12		300003903	1	Side light left
13		300003902	1	Side light right
14		500053263	2	Slow moving sign
15		600475131	8	Yellow reflector
16		300007517	2	Electric wire
17		300007515	2	Electric wire
18		300007521	1	Electric wire
19		7000603072	1	Junction box
20		300007499	2	Triangle holder
21		100323134	4	Bolt M5x12 DIN933
22		300316025	16	Lock nut M5 DIN 985
23		300304055	8	Bolt M12x25 DIN933
25		300316021	8	Lock nut M12 DIN985
26		300304129	4	Bolt M5x20 DIN933
27		300332073	4	Washer M5 DIN126
28		300308004	8	Screw M5x16 DIN84
29		7000018142	1	Plug socket
30		300332050	4	Washer M5 DIN126
31		300007514	1	Stick
32		7000603333	2	Screw M4x10

Tab.20

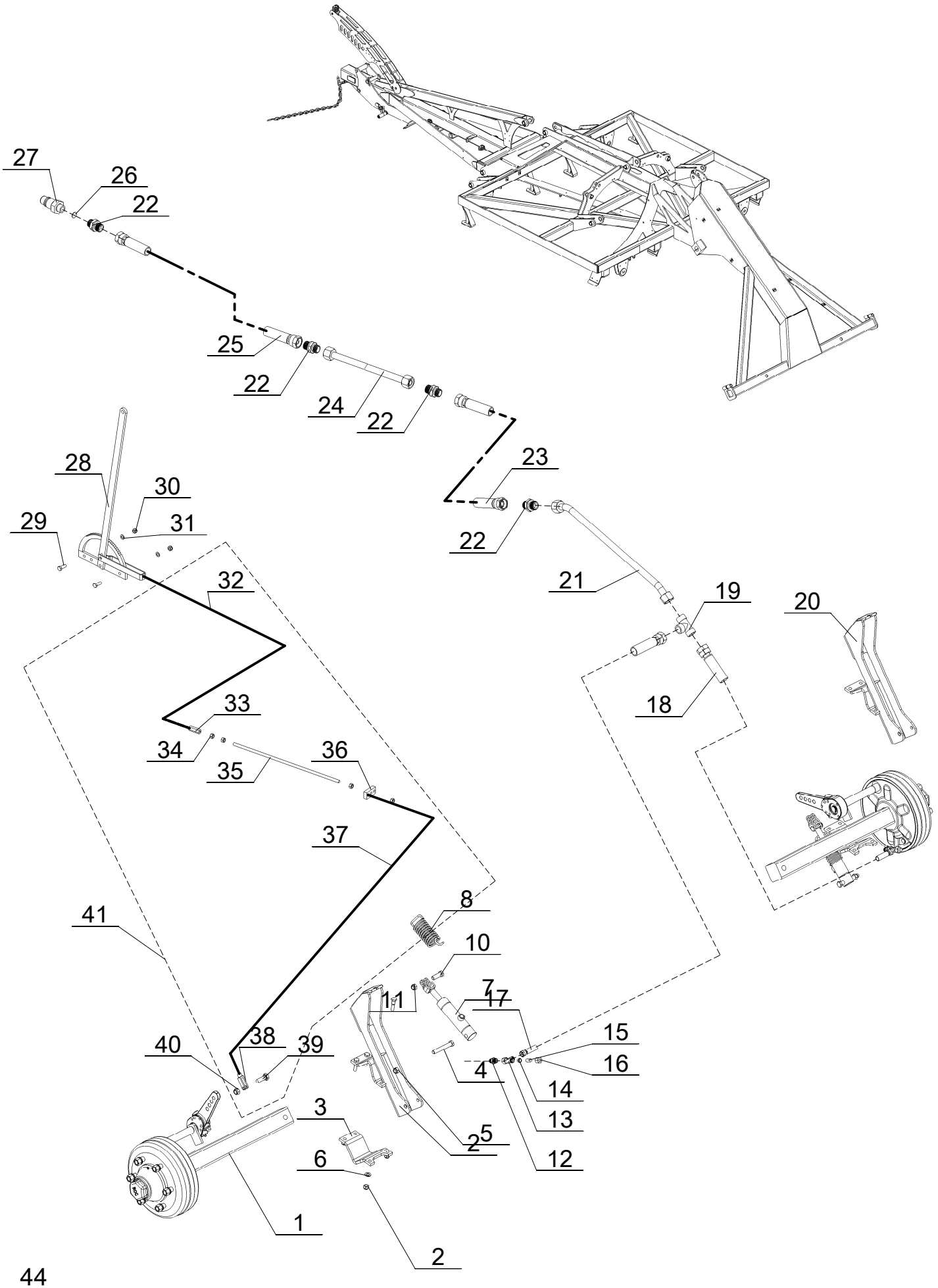
27
26
22
25
22
24
22
23
22
28
30
29
31
32
21
19
20
18
33
34
35
36
37
8
41
10
7
11
17
15
40
38
39
16
4
14
3
13
5
2
12
6
1
2

Hydraulic brakes and hubs

Tab.20 Date: 2017.08.01

Fig.	CNH Part no.	Kongskilde Part no.	Quantity	Description
1		300362500	2	Wheel axle with brake
2		300375500	1	Left brake bracket
3		300007648	2	Holdinh brake atachment
4		300304684	2	Bolt M14x100 cl.10.9 DIN931
5		71307214305	2	Lock nut M14 DIN980V
6		300332008	8	Washer M12 DIN126
7		300007662	2	Hydraulic brake cylinder
8		300007663	2	Braking spring
9		300007661	2	Hydraulic brake cylinder with spring 7+8
10		100323364	2	Bolt M14x1,5x43
11		100316085	2	Nut M14x1,5
12		71202079060	2	Coupling G3/8xM18x1,5
13		7210000165	2	Coupling -TM18x1,5
14		71202049420	2	Ring
15		372006041	2	Plug
16		71202039800	2	Nut M18x1,5
17		300007587	1	Hydraulic hose M18x1,5 L=1500
18		300007586	1	Hydraulic hose M18x1,5 L=1750
19		7210000105	1	Coupling-T M18x1,5
20		300375400	1	Right brake bracket
21		301044303	1	Hydraulic pipe
22		71202079364	3	Coupling M18x1,5
23		300007589	1	Hydraulic hose L=800
24		301044302	1	Hydraulic pipe L=1700
25		301044301		Hydraulic hose L=5700
26		300007684	1	Washer restriction
27		372006037	1	Brake plug
28		300007556	1	Hand brake lever
29		300304034	2	M10x30 DIN933
30		300316020	2	Lock nut M10 DIN985
31		300332027	2	Washer M10 DIN126
32		300007965	1	Cable with Bowden
33		300007961	1	Special nut
34		300315001	4	Nut M10 DIN934
35		300007960	1	Screw rod
36		300007962	2	Wire holder
37		300007958	2	Cable with Bowden
38		300007964	2	Holder
39		71301414455	2	Bolt M14x45 DIN933
40		300316031	2	Lock nut M14 DIN985
41		300360900	1	Lines kit cpl.

Tab.21

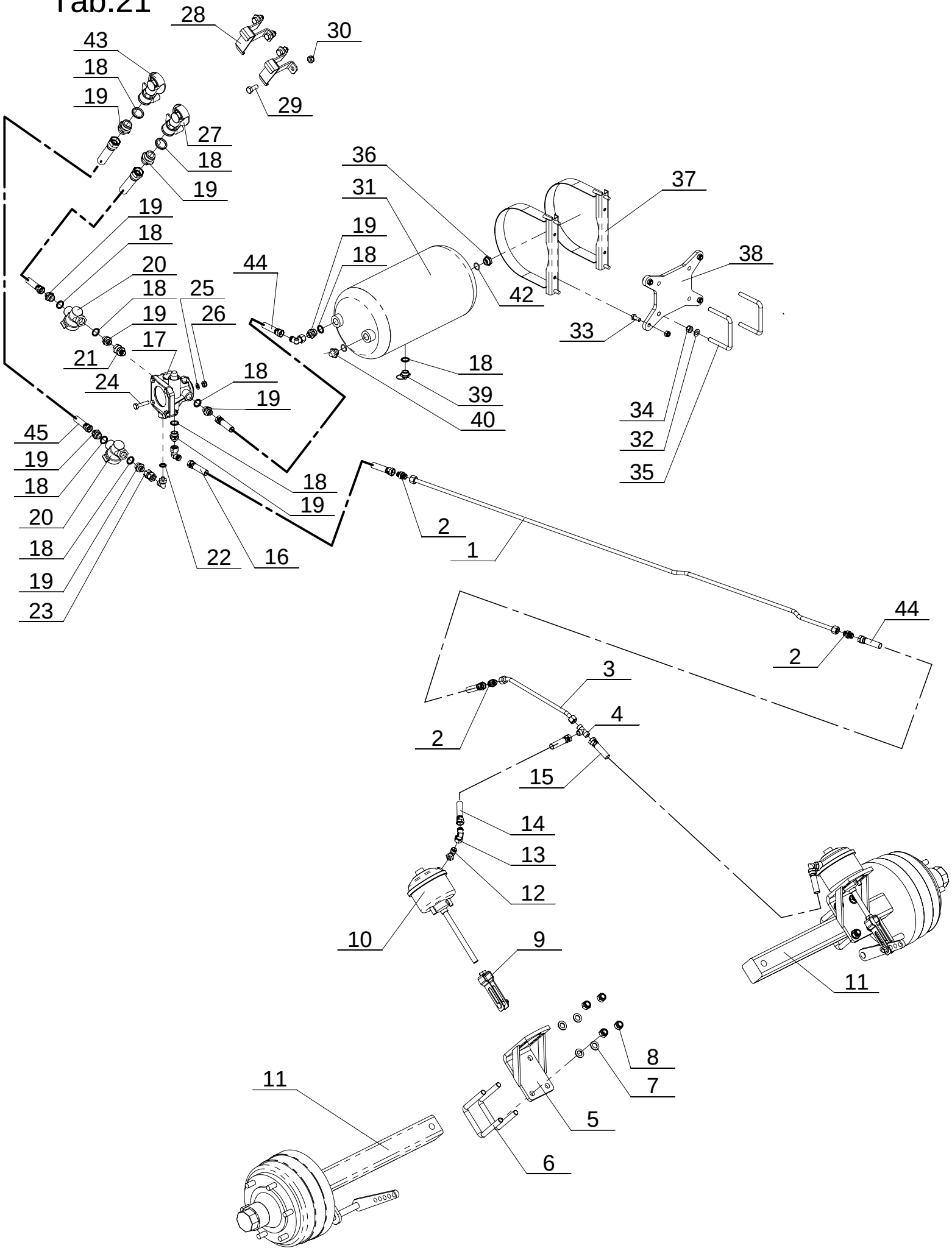
28
30
43
18
19
29
27
18
19
36
31
37
19
18
19
18
20
44
38
18
25
42
19
26
33
17
21
18
24
18
39
19
40
34
45
32
19
35
18
18
19
20
2
18
1
22
16
19
23
44
2
3
2
4
15
14
13
12
10
9
11
8
11
7
5
6

Pneumatic brakes and hubs

Tab.21 Date: 2017.12.04

Fig.	CNH Part no.	Kongskilde Part no.	Quantity	Description
1		301044302	1	Pipe L=1700 mm
2		71202079364	3	Fitting M18x1,5
3		301044303	1	Pipe D=12
4		7210000105	1	T-coupling M18x1,5
5		372268300	2	Brake chamber holder
6		7002156620	4	Jarzmo M16 91x124 ocynk
7		300332009	8	Washer M16 DIN126
8		300316023	8	Lock nut M16 DIN985
9		371004469	2	Mounting kit for brake chamber
10		371004462	2	Brake chamber
11		372252100	1	Wheel axle with brake
12		300001927	3	L-coupling M16x1,5/M18x1,5
13		300000867	3	L-fitting M18x1,5hydroscand / HK419-12L (M18x1,5)
14		300007586	1	Hydraulic hose M18x1,5 L=1750
15		372005164	1	Hydraulic hose M18x1,5 L=1500
16		7210000123	1	Hydraulic hose M18x1,5 L=1000
17		371004459	1	Relay emergancy valve
18		371223200	10	Seal kit 22x1,5
19		371004474	9	Coupling M22x1,5/M18x1,5
20		371004466	2	Filter
21		330130001	1	Coupling M16x1,5/M18x1,5
22		371223100	1	Seal kit 16x1,5
23		71202079361	1	Coupling M18x1,5
24		300304037	2	Bolt M10x45 DIN933
25		300332027	2	Washer M10 DIN126
26		300316020	6	Lock nut M10 DIN985
27		371004463	2	Hose coupling (red)
28		371004465	2	Quick coupling holder
29		300304153	4	Bolt M8x20 DIN933
30		300316027	4	Lock nut M8 DIN985
31		371004460	1	Air tank
32		300332008	4	Washer M12 DIN126
33		7000601587	4	Bolt M10x25 FZB DIN603
34		300316021	4	Lock nut M12 DIN985
35		300004566	2	U-bolt M12x90
36		371004475	1	Plug
37		371004461	2	Clamp 246
38		301045004	1	Air tank holder plate
39		371004467	1	Drain valve
40		371004468	1	Test port
42		371004473	10	O-ring 20x2,5
43		371004464	1	Hose coupling - yellow
44		300007589	2	Hydraulic hose M18x1,5 L=800
45		372005454	2	Hydraulic hose M18x1,5 L=4200

Tab.22

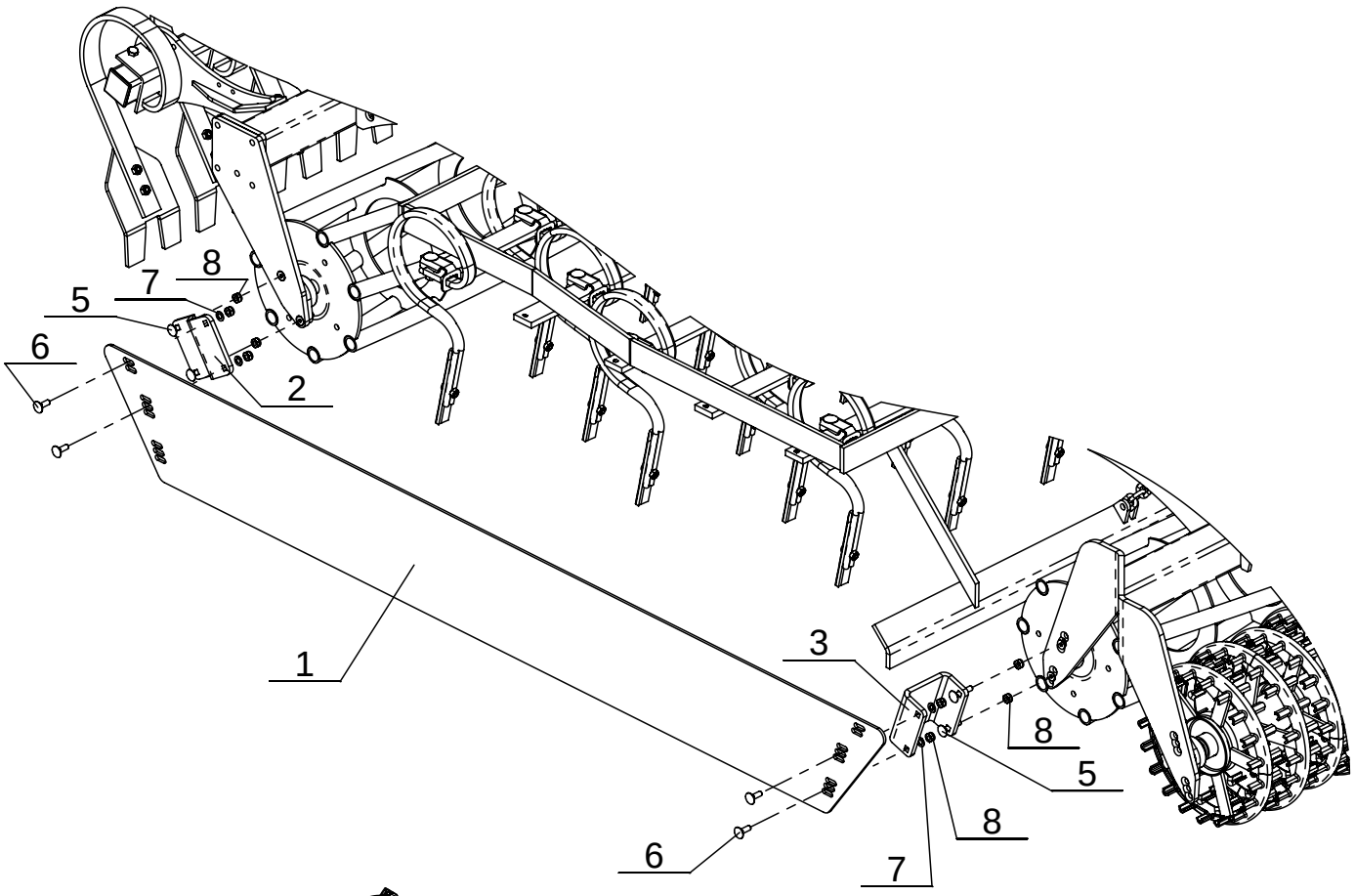

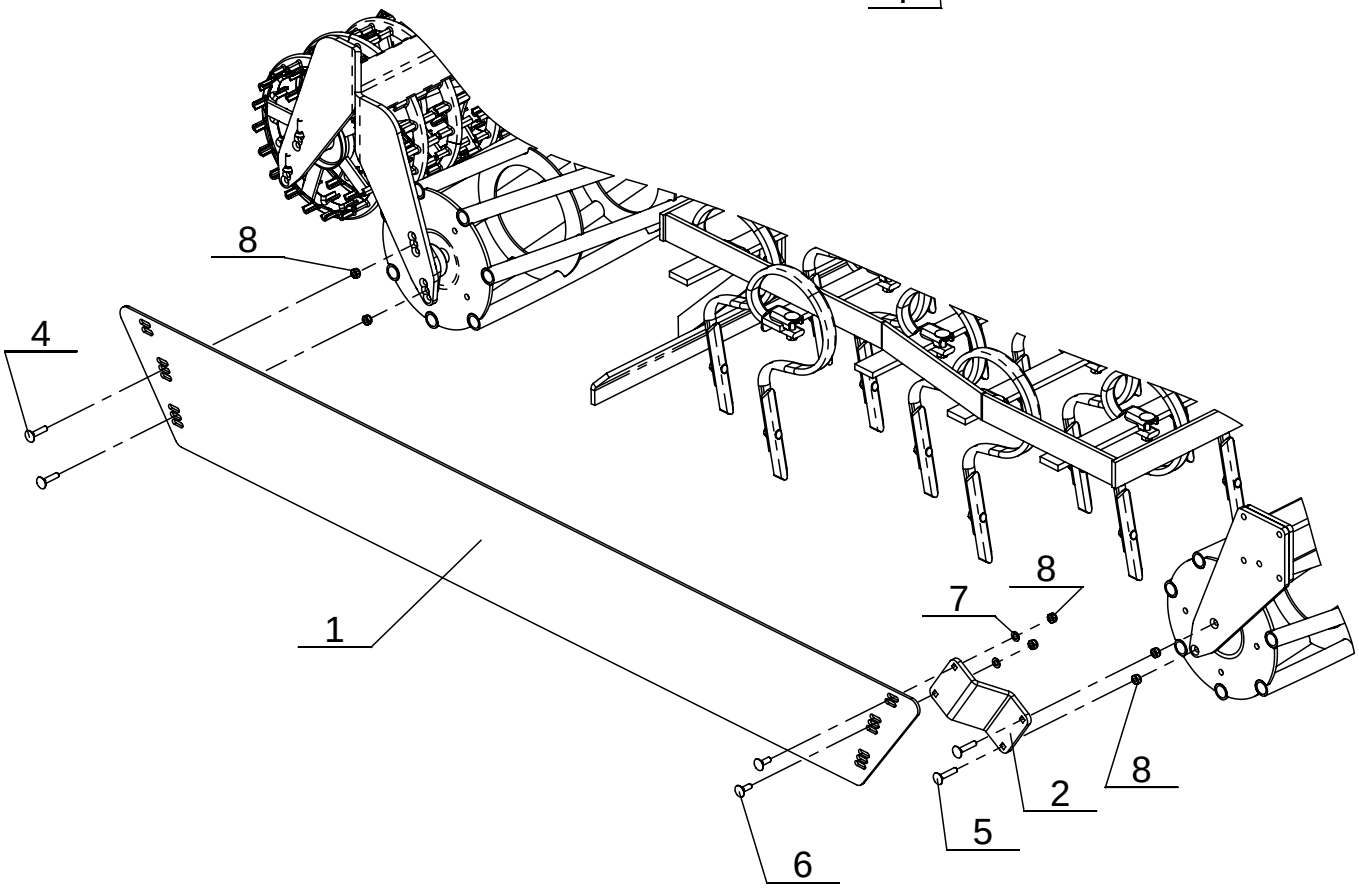

Side deflector

Tab.22 Date: 2017.11.17

Fig.	CNH Part no.	Kongskilde Part no.	Quantity	Description
1		301014065	2	Side deflector welded - GERMINATOR PRO
2		301014066	2	Front holder - side deflector - GERMINATOR PRO
3		301014067	1	Rear holder - side deflector - GERMINATOR PRO
4		300304171	2	Bolt M10x45 8.8 FZB DIN603
5		300304172	6	Bolt M10x50 8.8 FZB DIN603
6		300304165	6	Bolt M10x30 8.8 FZB DIN603
7		300332027	6	Washer M10 FZB DIN126
8		300316020	14	Nut M10 cl.8 FZB DIN985
9		301000801		Side deflector cpl. (Item 1 - 8)

Tab.23

1
KONGSKILDE
Moving agriculture ahead
GERMINATOR PRO
2
KONGSKILDE
Moving agriculture ahead
GERMINATOR PRO
3
4
max.
200 bar
25
5
6
7
8
9
10
11
12
13
14
15
16
17
380/55-17 2,8bar
480/45-17 3,2bar
301010037
18
19

Tab.23 Date: 2017.08.01

Fig.	CNH Part no.	Kongskilde Part no.	Quantity 5400/6200/7900	Description
1		301010034	4	Label "Germinator Pro"
2		301010035	1	Label "Germinator Pro" for drawbar
3		71000629546	4	Label "Keep distance from machine"
4		200083979	4	Label "Risk of hand injury"
5		71000629551	1	Label "Remove the key from ignition"
6		200043774	1	Label "Reen manual book"
7		300007973	1	Label "Avoid oil under pressure"
8		300007974	1	Label "Do not stand beetwen tractor and machine"
9		300007977	1	Label "Maximum oil pressure 200bar"
10		300008277	1	Label "Speed limit 25km/h"
11		74000666103	4	Label "Mouting points for loading"
12		372003609	2	Label "Keep distance"
13		301010038	1	Label "Keep distance from electrical wires"
14		301010039	1	Label "Install cylinder lock"
15		301010041	1	Label "Make sure that hooks are locked"
16		300007972	1	Label "Ride on the machine prohibited"
17		301010040	1	Label "Do not stand in drawbar movment"
18		301010037	1	Label "Tyre pressure"
19		74000667708	26/26/30	Label "Lubrication points

301010052 – 2017.12.04

You can always find the latest version of the manuals at www.kongskilde.com