JF-STOLL

Disc Mower

GXT 12005 I GXT 12005 SM I GXT 15005 SM

Instruction Manual

Edition 2 I March 2009

JF-STOLL

EU Declaration of Conformity

Manufacturer

JF-Fabriken - J. Freudendahl A/S
DK 6400 SØNDERBORG DENMARK
Phone +45-74125252

Hereby declares that:

Machine type:

GXT 12005
GXT 12005 SM
GXT 15005 SM

a: was manufactured in conformity with the provisions in the COUNCIL DIRECTIVE of 14 June 1989 on mutual approximation of the laws of the Member States on the safety of machines (89/392/EEC as amended by directive 91/368/EEC, 93/44/EEC, 93/68/EEC) with special reference to Annex 1 of the Directive on essential safety and health requirements in relation to the construction and manufacture of machines.

Sønderborg, d. 2009-03-11

Jørn Freudendahl
Responsible for construction and manufacturing

FOREWORD

DEAR CUSTOMER!

We appreciate the confidence you have shown our company by investing in a JF-STOLL product and congratulate you with your new machine. Of course, it is our wish that you will experience complete satisfaction with the investment.

This instruction manual contains information about correct and safe use of the machine.

When buying the machine you will receive information about use, adjustment and maintenance.

However, this first introduction cannot replace a more thorough knowledge of the different tasks, functions and correct technical use of the machine.

Therefore you should read this instruction manual very carefully before using the machine. Pay special attention to the safety instructions.

This instruction manual is made so that the information is mentioned in the order you will need it, i.e. from the necessary operation conditions to use and maintenance. Besides this there are illustrations with text.

"Right" and "Left" are defined from a position behind the machine facing the direction of travel.

All the information, illustrations and technical specifications in this instruction manual describe the latest version on the time of publication.

JF-Fabriken A/S reserves the right to make changes or improvements in the design or construction of any part without incurring the obligations to install such changes on any unit previously delivered.

CONTENTS

1. INTRODUCTION

This instruction manual deals with GXT 12005, GXT 12005 SM and GXT 15005 SM. The front machine has its own instruction manual.

INTENDED USE

The disc mowers are **solely constructed for** usual work in agriculture. They are **solely intended for cutting growing grass and straw crops on the ground. They should only be connected to tractors and driven by the PTO of the tractor.**

Any use beyond this is outside the intended use. JF-Fabriken A/S is not responsible for any damage resulting from such use, the user bears that risk.

It is assumed that the work is performed under reasonable conditions, i.e. that the fields are cultivated normally and to a reasonable extent kept clear of foreign matter and the like.

Intended use, of course, implies that the prescriptions concerning adjustment, operation and maintenance in the instruction manual and the spare parts book are observed.

The disc mowers should only be used, maintained and repaired by persons who, through relevant instructions and after reading the instruction manual, are familiar with the machine in question and, in particular, are informed of possible dangers.

The following safety instructions as well as common rules concerning technical safety, working practices and road safety **must** be observed altogether.

If changes are made on the machine and its construction without permission from JF-Fabriken A/S, JF-Fabriken A/S cannot be held responsible for any damage resulting from this.

SAFETY

The safety of persons and machines is an integral part of JF-STOLL's development work. However, damage can occur as a consequence of misuse and insufficient instruction. **We wish to ensure the safety of you and your family in the best possible way**, but this also requires an effort on your part.

A mower cannot be constructed in such a way that it guarantees the full safety of persons and at the same time performs an efficient piece of work. This means that it is very important that you as user of the machine pay attention and use the machine correctly and thereby avoid exposing yourself and others to unnecessary danger.

The machine demands a skilled operation, which means that ***you should read the instruction manual before you connect the machine to the tractor***. Even though you have been driving a similar machine before, you should read the manual - this is a matter of your own safety!

You should **never** leave the machine to others before you have made sure that they have the necessary knowledge to operate the machine safely.

DEFINITIONS

The safety decals and the instruction manual of the machine contain a line of safety notes. The safety notes mention certain measures, which we recommend you and your colleagues to follow as to increase the personal safety as much as possible.

We recommend that you take the necessary time to read the safety instructions and inform your staff to do the same.

In this instruction manual this symbol is used with reference to personal safety directly or indirectly through maintenance of the machine.

CAUTION: The word CAUTION is used to ensure that the operator follows the general safety instructions or the measures mentioned in the instruction manual to protect himself and others against injuries.

WARNING: The word WARNING is used to warn against visible or hidden risks, which might lead to serious personal injuries.

DANGER: The word DANGER is used to indicate measures which, according to legislation, must be followed to protect oneself and others against serious injuries.

GENERAL SAFETY INSTRUCTIONS

The following is a brief description of the measures, which should be a matter of common knowledge to the operator.

1. Always disengage the PTO drive shaft, activate the parking brake and stop the tractor engine before you
   - lubricate the machine,
   - clean the machine,
   - disassemble any part of the machine,
   - adjust the machine.

2. Always lower the cutting unit to the ground or activate the transport safety device when parking the machine.

3. Always use the transport safety device of the cutting unit and the stop valves of the hydraulic cylinders during transport.

4. Never work under a raised cutting unit unless it is secured by means of stop blocks or other mechanical securing device.

5. Always block the wheels before working under the machine.

6. Never start the tractor until all persons are safely away from the machine.

7. Make sure that all tools have been removed from the machine before starting the tractor.

8. Make sure that all guards have been mounted correctly.

9. During work never wear loose clothes which can be pulled in by the moving parts of the machine.

10. Do not change the guards or work with the machine when a guard is missing or defective.

11. Always drive with the statutory lights and safety marking during transport on public road and at night.

12. Limit the transport speed to maximum 30 km/h if the machine has not been marked with another maximum speed limit.

13. Do not stand near the machine while it is working.

14. When mounting the PTO drive shaft check that the number of RPM of the tractor matches those of the machine.

15. Always use hearing protectors if the noise from the machine is annoying or if you are working with the machine for a considerable period in a tractor cabin, which has not been silenced sufficiently.

16. Before raising or lowering the cutting unit, check that no persons are near the machine or touching it.

17. Do not stand near the guards of the cutting unit and do not lift the guards before all revolving parts have stopped moving.

18. Never use the machine for other purposes than what it has been constructed for.

19. Do not allow any children to be near when you are working with the machine.

20. Never stand between the tractor and the mower during connection and disconnection.

SPECIAL SAFETY INSTRUCTIONS

When working with mowers the following special measures should be observed.

1. Use a tractor with closed cabin. Furthermore it is advisable to protect the glass of the cabin with polycarbonate plates or with a close-meshed net outside. The cabin should be closed when working in the field.

2. Always keep away from the cutting unit when the blades or drums of the machine rotate.

3. When replacing blades it is important to observe the rules in the instruction manual to fulfil the safety requirements. Always use original spare parts.

4. Before use, check the revolving parts (blades, blade bolts, discs and flow caps). If parts are damaged (bent or cracked), worn or missing, they should be replaced immediately.

5. Damaged, worn or missing blades should be replaced in sets in order not to create an unbalance in the machine.

6. Check canvases and guards regularly. Replace worn or damaged canvases.

7. Canvases and guards secure against ejection of stones and other foreign bodies. Before use canvases and guards must be placed correctly.

8. Lower the cutting unit to working position before starting the power transmission.

9. The field should be kept clear of stones and foreign bodies, if possible.

10. Even if the machine is adjusted and operated correctly, stones and foreign bodies in the field can be ejected from the cutting unit. Therefore no persons should stand near the cutting unit where the conditions are unknown. Be particularly careful when working along public roads or facilities (schools, parks etc.)

11. Though it is possible, never back with the cutting unit in working position. The correct movement for the cutting unit only works when driving forwards, and there is a risk of damage if driving backwards with the machine in working position.

12. Even though the power transmission has stopped, the revolving parts have a momentum. Therefore, always wait until the blades or drums have come to a complete stop before getting near the cutting unit.

If in doubt, always contact the nearest dealer.

CHOICE OF TRACTOR

Always follow the recommendations specified in the instruction manual of the tractor. If this is not possible, technical assistance must be sought.

Choose a tractor with a suitable power on the PTO. If the power of the tractor is considerably larger than the usual requirement of the machine, the machine should be secured against overload with a suitable clutch on the PTO.

Long-term overload may damage the machine and at worst result in ejection of parts.

Choose a tractor with a suitable own weight and track width so that it can drive steadily on the ground. Also make sure that the link arms of the tractor are intended to carry machines with the weight in question.

Always choose a tractor with a closed cabin when working with a disc mower.

CONNECTION AND DISCONNECTION

Always make sure that nobody is standing between the tractor and the machine during connection and disconnection. An unintentional manoeuvre with the tractor may cause serious injury. (See figure 1-1)

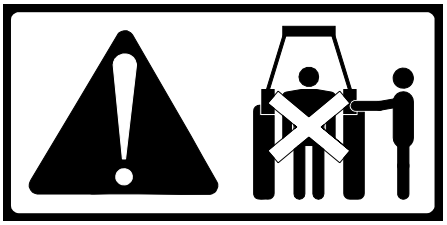

Fig. 1-1

Check that the machine is intended for the number and the direction of rotation of the tractor PTO. The number and direction of rotation of the tractor must be as in figure 1-2, seen from a position standing behind the tractor facing the direction of travel. A wrong number of rotations may result in reduced cutting and over a long period may damage the machine and at worst result in ejection of parts.

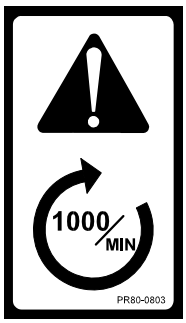

Fig. 1-2

Make sure that the PTO drive shaft has been mounted correctly. The lock pin must be in mesh and the support chain must be fastened.

The PTO drive shaft must be correctly protected. If a guard is defective, it must be replaced immediately.

Check that all hydraulic couplings are correctly mounted and tight and that all hoses and fittings are undamaged before activating the hydraulic system.
Before the tractor engine has stopped, make sure that there is *no* pressure in the hydraulic hoses by activating the tractor hydraulic spool valves to floating position.
Hydraulic oil under pressure can penetrate the skin and cause serious infections. You should always protect the skin and the eyes against oil splashes. If, by accident, hydraulic oil under pressure hits you, consult a doctor immediately. (See figure 1-3)

Fig. 1-3

Check that the cutting unit can move freely before you activate the hydraulic cylinders. Make sure that no persons are near the machine when starting as there might be air in the hydraulic system which might lead to sudden movements.

ADJUSTMENT

Never adjust the mower while the PTO drive shaft is engaged. Disengage the PTO drive shaft and stop the tractor engine before you adjust the machine. It is important not to remove the guards until all revolving parts have stopped. Because the machine has freewheel this may take some time.

Before working check blades and discs for cracks and other damage. Replace damaged blades and discs. (See section on maintenance)

Check periodically if blades and blade bolts are worn according to the rules in the instruction manual. Likewise, check that the blade holders are not loose or defective (see section on maintenance).

TRANSPORT

Never drive faster than the conditions allow, and maximum 30 km/h if the machine has not been marked with another maximum speed limit.

It is important to block the hydraulic transport adjustment. An unintentional operation of the cylinder for conversion between work and transport or the oversteer cylinder may cause the machine to move to the opposite lane, the bicycle track or the sidewalk.

This may also happen if there is air in the hydraulic cylinders or if there is a sudden loss of oil from the hydraulic hoses.

To ensure all the air has been expelled from the oil in the hydraulic cylinders, test all the functions after the hydraulic connections are connected to the tractor. Especially before driving on public road.

Before driving on public road for the first time, you must make yourself familiar with the swing characteristics of the trailer (see section on power steering).

WORKING

During the daily work it should be considered that loose stones and foreign matter on the ground might get in contact with the revolving parts and get thrown out again at a very high speed.

Therefore, all guards must always be correctly mounted and intact when you are working with the machine.

Worn and damaged canvases should be replaced.

In stony fields, the stubble height should be adjusted to maximum and the cutting angle to minimum.

Through a stone release mechanism in the suspension, the machine is secured against shocks in the direction of travel. However, there is **no** securing against shocks if backing with a lowered cutting unit and you **risk damaging the machine.**

If the cutting unit or the conditioner is blocked, stop the tractor engine, activate the parking brake and wait until the revolving parts have stopped before removing the foreign matter.

Never allow anybody to stand near the mower during work, especially not children.

Drive in a low tractor gear if working on hillsides.

When working with a mower keep a safe distance from steep slopes and similar ground conditions, as the ground may be slippery and pull the mower and the tractor sideways. Also remember to adjust the speed for sharp turns when driving up/down hillsides. (See section on driving on hilly ground).

PARKING

The machine can be parked in 2 positions. In working position with the cutting units lowered or in transport position.
Never leave the tractor before the cutting unit is resting on the ground or the machine is in transport position, the engine of the tractor has stopped, and the parking brake has been activated. This is the only way to perform a safe operation. See section on parking.
Make sure that the jack is correctly fastened and locked when parking the machine.

GREASING

When lubricating or maintaining the machine, make sure that the cutting unit is resting on the ground, in transport position or that the lifting cylinders are blocked by means of stop valves.

Never try to clean, grease or adjust the machine before the PTO has been disengaged, the tractor engine has stopped and the parking brake been activated.

MAINTENANCE

It is important that the cutting unit is correctly relieved to ensure perfect operation in the field and to reduce the risk of damaging the cutter bar.

Always make sure that the used spare parts are tightened to the correct torque. (See section on maintenance)

Hydraulic hoses must be checked by an expert before use, and after that minimum once a year. If necessary, they must be replaced. The working life of hydraulic hoses should not exceed 6 years, including maximum 2 years of storage.
When replacing, always use hoses which comply with the requirements stated by the manufacturer. All hoses are marked with date of production.

When replacing parts in the hydraulic system always make sure that the cutting unit rests on the ground or is in transport position. Remember to relieve the oil pressure before working with the hydraulic system.

MACHINE SAFETY

All revolving parts are balanced by JF-STOLL by means of a special machine with electronic sensors. If it turns out that a part still has an unbalance, small counterweights should be fastened.

As the discs run at up to 3000 RPM, even the slightest unbalance will cause vibrations which may lead to fatigue fractures.

If the vibrations or the noise of the machine increase considerably during the operation, stop working immediately. Do not continue the work until the fault has been corrected.

When replacing blades, both blades on the disc in question must be replaced as not to create an unbalance.

During the season check daily that no blades, carriers or bolts are missing. If any of these are missing, mount new parts immediately.

Clean caps and flow intensifiers of earth and grass regularly.

You should also check and “air” the friction clutch regularly to ensure it does not rust.

TECHNICAL DATA

Type			GXT 12005	GXT 12005 SM	GXT 15005 SM
Conditioner system			-	PE-fingers	PE-fingers
Working width			11.55 m	11.55 m	14.5 m
Transport width (alternative wheels)			2.99 (3.29) m	2.99 (3.29) m	2.99 (3.29) m
Power requirement, minimum on PTO			147 kW/200 HP	184 kW/250 HP	220 kW/300 HP
Capacity at 10 km/h			Approx. 11 ha/h	Approx. 11 ha/h	Approx. 14 ha/h
Number of discs			24	24	32
Number of blades			48	48	64
Demand for link arms			Cat. III		
PTO-type, RPM			1 3/4” 20 splines/1000 rpm		
Friction clutch and freewheeling			Standard (one per cutting unit)		
Oil outlet			1 double + 1 single		
Oil outlet oversteering (optional equipment)			+ 1 double		
Power outlet 12 V (optional equipment)			1		
Transport conversion			Hydraulic		
Safety system			TopSafe and hydraulic		
Lighting kit			Standard		
Tyres, standard			12.5/80-18 AW		
Tyres, alternatively			500/50-17 FL+		
Weight, approx.			4920 kg	5400 kg	6400 kg
Weight transferred to tractor. Transp. (work)			1280 (2560) kg	1220 (2780) kg	700 (3260) kg
Number of swath rollers, standard			0	-	-
Max number of swath rollers			4	-	-
Conditioner width, approx.			-	4 x1.76 m	4 x 2.6 m
Conditioner elements			-	384 PE-fingers	544 PE-fingers
Noise level in the tractor cabin	Machine connected	Window closed	74.6	74.6	74.6
		Window open	86.1	86.1	86.1
	Machine disconnected	Window closed	72.1	72.1	72.1
		Window open	75.7	75.7	75.7

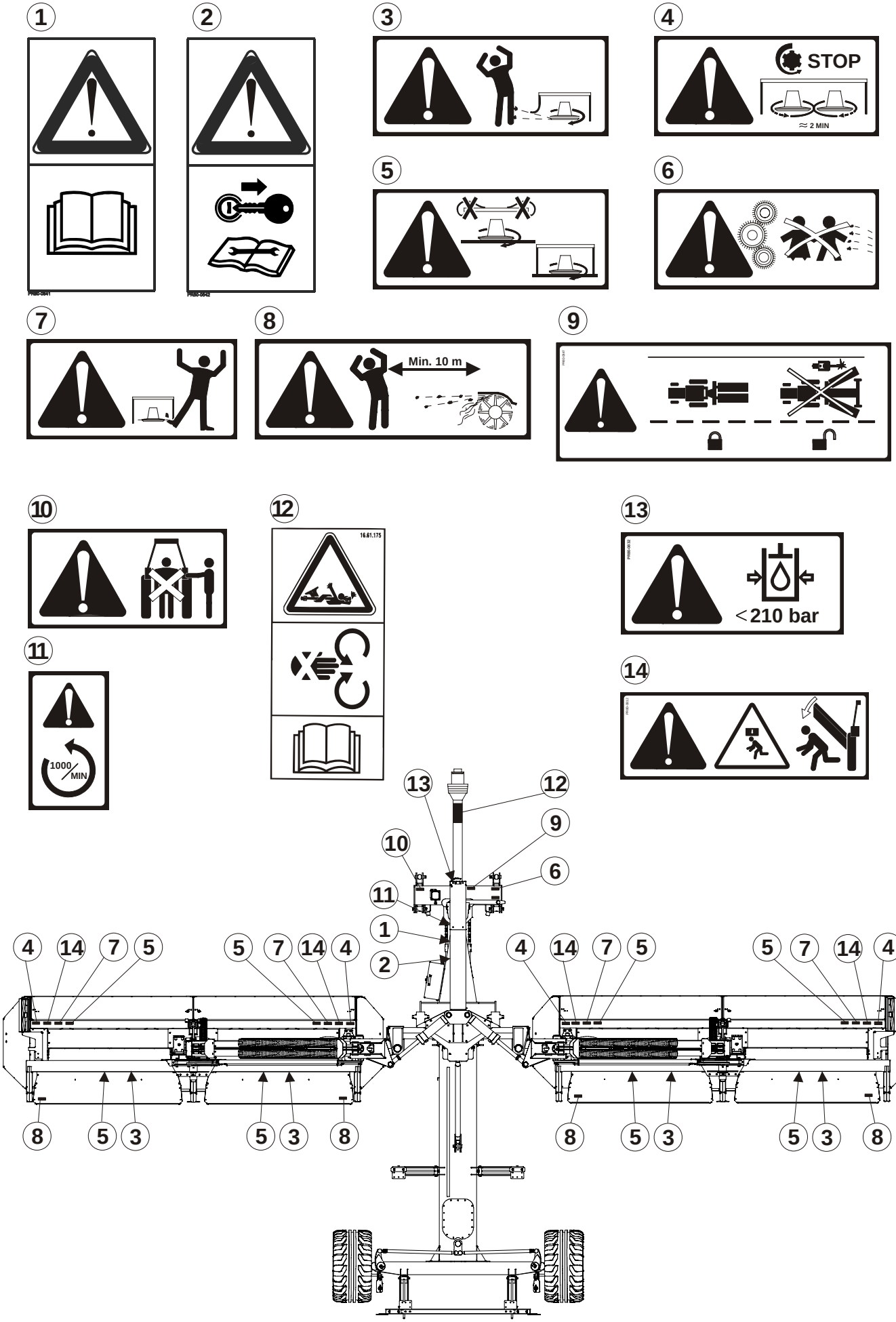
1
2
3
4
STOP
≈ 2 MIN
5
6
7
8
Min. 10 m
9
10
12
16.61.175
13
< 210 bar
11
1000/MIN
14
13
12
9
10
6
11
1
2
4
14
7
5
5
7
14
4
8
5
3
5
3
8

SAFETY DECALS

The safety decals shown on the previous page are positioned as shown on the drawings at the bottom of the page. Before using the machine, check that all decals are present: if not, require those missing. The decals have the following meaning:

1 Read the instruction manual and the safety instructions.
This is to remind you to read the delivered documents to ensure the machine is operated correctly and to avoid unnecessary accidents and machine damage.

2 Stop the tractor engine and remove the ignition key before touching the machine.
Always remember to stop the tractor engine before lubricating, adjusting, maintaining or repairing. Also remember to remove the ignition key to ensure that nobody starts the engine, until you have finished.

3 Risk of stones being thrown.
Almost the same meaning as decal No. 5. Even though all canvases and guards are in the right place, there is still a risk of stones etc. being thrown out. Therefore, nobody should be allowed to stand near the machine during operation.

4 Rotating parts.
After the PTO drive shaft has stopped, the blades will have a momentum where they keep rotating for up to 2 minutes. Wait until the blades have come to a complete stop before you remove the canvas and the guards for inspection and maintenance.

5 Operation without canvas.
Do not start the machine unless canvases and guards are intact and in their right place. The machine can throw out stones and other foreign matter during operation. The purpose of the canvases and the guards is to reduce such danger.

6 Children.
Never let children stand near the machine during operation. Especially not small children as they have a tendency to do unforeseen things.

7 Rotating blades.
Do not under any circumstances let anyone get near or stand near the machine during operation. The rotating blades of the machine can without difficulty cause serious injury to any part of the body if hit by such a blade.

8 Stones being thrown from the conditioner. (Only GXT 12005/15005 SM)
The conditioner rotor runs with a high number of RPM and stones on the ground can be thrown up to 10 m backwards at a very high speed. Therefore, always make sure that nobody is standing near the machine when it is working.

9 Remember the transport lock.
Always remember to activate the transport lock before transporting the machine on public road. Errors in the hydraulic system and unintended manoeuvres may cause the machine to move to working position during transport which may result in serious machine damage or personal injury.

10 Risk of injury during the connection.
Never let anybody stand between the tractor and the machine during connection to the tractor. An unintentional manoeuvre may cause serious injury.

11 The number and the direction of rotations.
Check that the PTO drive shaft runs with the right RPM and in the right direction. A wrong number of rotations and/or direction of rotation can damage the machine with the risk of personal injury as a result.

12 The PTO drive shaft.
This decal has the purpose to remind you how dangerous the PTO drive shaft can be if it is not correctly mounted or protected.

13 Maximum 210 bar.
Make sure that the hydraulic components are not exposed to more pressure than maximum 210 bar as there could be a risk of explosive damage of parts. Hereby you expose yourself and others to serious danger of getting hit by metal parts with high speed or oil under high pressure.

14 Never stand underneath a lifted cutting unit
You must never stand under a lifted cutting unit without having placed supports to prevent the cutting unit from falling down, which could cause serious injury.

2. CONNECTION AND TEST DRIVING

CONNECTION TO THE TRACTOR

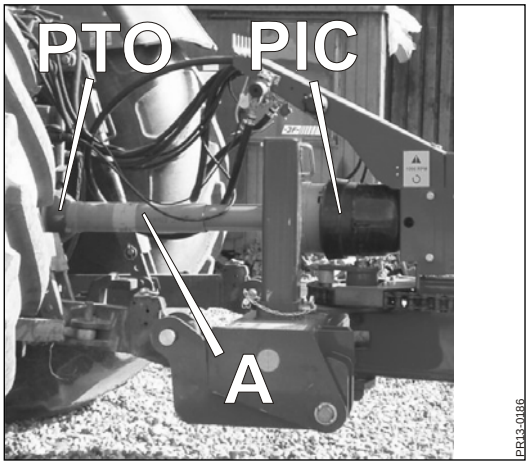

Fig. 2-1

Fig. 2-1 The GXT machines are connected to the lower link arms of the tractor. The dowels are intended for category III.
Adjust the lower link arms to the same height.
The lower link arms of the tractor can now be connected to the machine and then **raised to a height where the PTO drive shaft is horizontal.**
The lower link arms must be **locked** in this position to prevent a sideways travel so that the **PTO shaft and the PIC shaft are in line seen from above**. A straight PTO drive shaft absolutely gives the longest life on axle universal joint and the other rotating parts of the machine.

WARNING: **If the link arms are not locked sideways during transport, it may cause the wagon to wobble.**

ADJUSTMENT OF PTO DRIVE SHAFT

IMPORTANT: Do not shorten your new PTO shaft until you are certain that it is necessary. From the factory the PTO shaft is adjusted to the distance from PTO to PIC which is standard on most tractor brands.

If it is still necessary to shorten the PTO shaft, please note the following:

IMPORTANT: The profile tubes of the PTO shaft must fully comply with the overlapping measures shown in Fig. 2-3.

IN CASE OF SHORTENING:

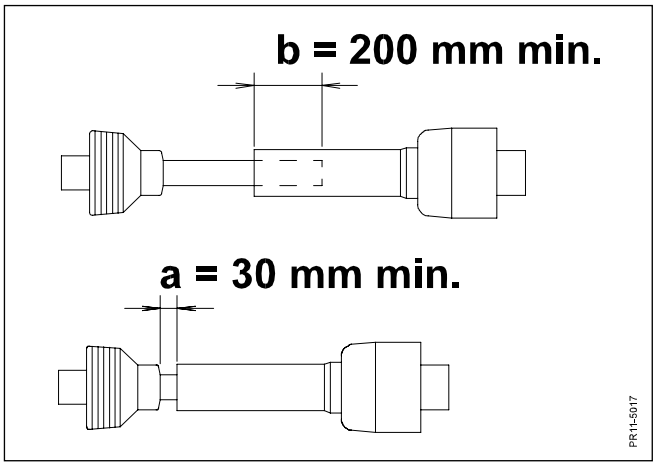

Fig. 2-3

Fig. 2-3 Adjust the PTO shaft so that it:

- has the biggest possible overlapping
- in no position has less overlapping than 200 mm.
- Is not compressed more than the prescribed 30 mm in order not to bottom the shaft.

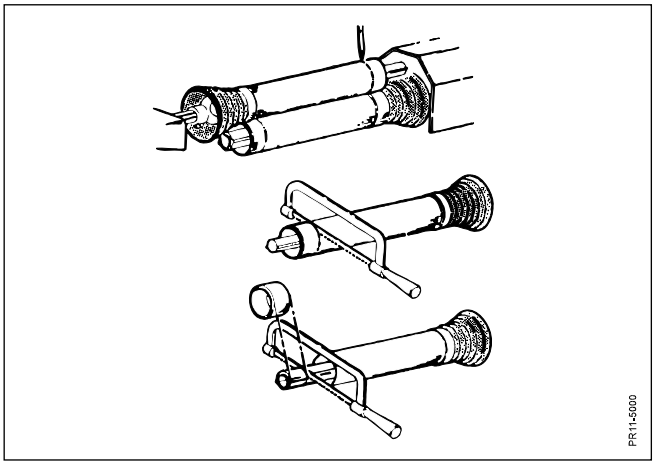

Fig. 2-4

Fig. 2-4 Fasten the PTO drive shaft half parts to PTO and PIC, respectively, when these are at the same horizontal level and opposite each other (the shortest distance on this machine).
Keep the shaft ends parallel to each other and mark the 30 mm (minimum).
Shorten all 4 tubes equally. The ends of the profile tubes must be rounded off with minimum radius 2 mm and burrs must be removed carefully.

WARNING: **Grease the tube carefully before it is reassembled as it will otherwise be exposed to big friction forces.**

JACK

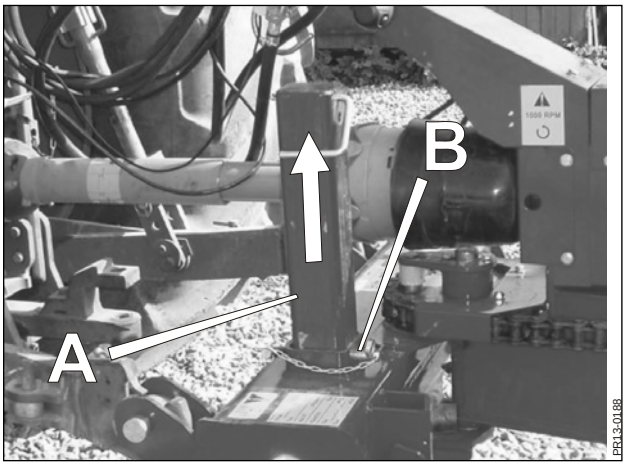

Fig. 2-5

Fig. 2-5 The jack **A** on the drawbar is lifted upwards and locked with pin **B** and spring pin.

THE PTO SPEED OF THE MACHINE

The machine is built for 1000 rpm. Therefore, before starting the machine, please check that the PTO shaft runs with 1000 rpm.

FRICTION CLUTCH AND FREEWHEELING

A friction clutch with freewheel is mounted near the input gear on each cutting unit. See section **5. MAINTENANCE – friction clutch** before you start up.

HYDRAULIC CONNECTION

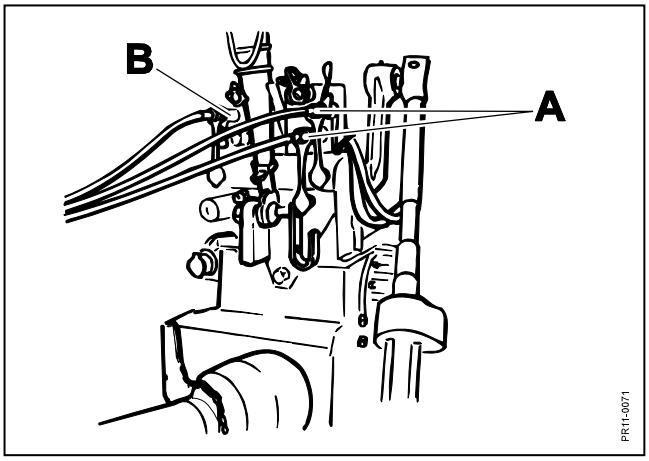

Fig. 2-6

Fig. 2-6 The hydraulic hoses for the cylinders for conversion between work and transport position are connected to the double-acting oil outlet **A** and the hydraulic hose for the lifting cylinders is connected to a single-acting outlet **B** on the tractor.
If the machine is fitted with the equipment “Cylinder for oversteering” an extra double acting outlet must be used.

DANGER: **The hydraulic components must not be exposed to a higher pressure than 210 bar as a higher pressure may cause parts to be damaged. Hereby a serious risk of personal injury occurs.**

AIR BRAKES

The machine can be equipped with air brakes if this is required by the Road Traffic Act. The system is a 2-wire system. First connect the yellow connector and then the red connector to the tractor. When disconnection follow the procedure in reverse order.

IMPORTANT: Check that the clutches are correctly mounted and that the hoses can not get jammed.

DRIVING ON PUBLIC ROAD!

The machine is only built to be trailed behind a tractor in the tractor lift arms, cf. section **CONNECTION TO THE TRACTOR**.
When you receive the machine from JF-Fabriken A/S it is in transport position. Before you drive on public roads you must convert the machine from transport to working position and back to ensure that there is no air in the hydraulic system. **See section on conversion.**

Before driving on public roads you should make yourself familiar with the use of the machine's power steering. You must in particular pay special attention to the swing characteristics. **See section on power steering.**

If the machine is fitted with the equipment "Cylinder for oversteering" the cylinder must be placed in middle position so that the machine drives directly behind the tractor.

Limit the transport speed to **maximum 30 km/h if the machine has not been marked with another maximum speed limit from the factory**.

DANGER - ALWAYS REMEMBER:

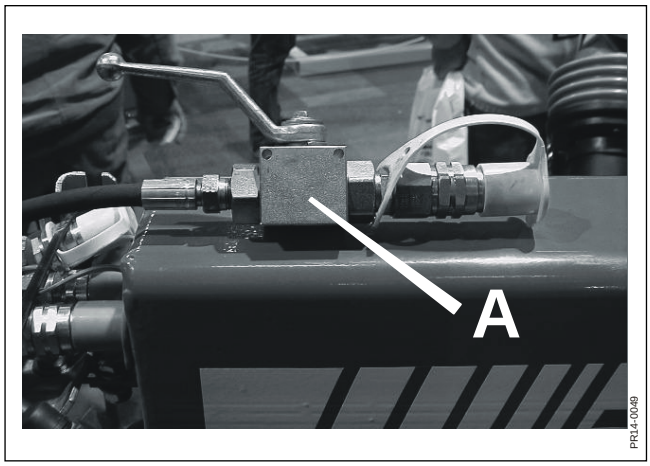

Fig. 2-7

Fig. 2-7 **BEFORE TRANSPORT CLOSE THE BALL VALVES** that are placed by the quick-release couplings by the tractor. The valve is shown in open position and is turned off when the handle is turned 90 degrees.
This must be done in case of unintended use of the hydraulic outlet during transport to prevent the machine from swinging into working position during transport.

DANGER – TRAFFIC MARKING:

The owner is always obliged to ensure that the machine is equipped with correct lighting system and other traffic marking in accordance with the country's current rules.

CHECK BEFORE USE

Before you use your new disc mower, please do as follows:

1. Read this instruction manual carefully!

2. Check that the machine has been assembled correctly and is undamaged.

3. Check that the PTO speed of the machine (and of the tractor) is correct. Too high PTO speed can be dangerous. Too low PTO speed causes bad cutting, blocking of the disc mower and high torque on the drive shafts. Help to find the correct speed can be found in the section **”CONTROL OF CORRECT PTO SPEED”**.

4. Check the movements of the PTO drive shaft. If the PTO shafts are too short or too long it may damage the tractor as well as the machine considerably.
   Check that the protection tubes do not get jammed or damaged in any position.
   Check that the safety chains of the protection tubes have been secured properly and that they do not in any position get too tight or damaged.

5. Make sure that the hydraulic hoses have been connected in such a way that they are long enough for the movements of the machine in relation to the tractor.

6. Re-tighten the wheel bolts.

7. Check the tyre pressure. See section **”5. MAINTENANCE”.**

8. Check that the machine has been greased sufficiently and check that the oil level in the gearbox and the cutter bar is correct. See section **”4. GREASING”.**

9. Air the friction clutch as described in chapter **”5. MAINTENANCE”.**

From the factory the revolving parts of the machine have been tested and declared error-free. However, you should do as follows before using the machine:

10. Start the machine at a low number of RPM. With open rear window and without hearing protector you should check that there are no unusual scratching or knocking sounds. Then the number of RPM can be increased. At the correct number of RPM, check if there are any noticeable vibrations. (Check the guards for unusual vibrations).

If there is any doubt, stop the tractor and the machine according to the procedure described in the section ”**SAFETY”.**
Turn the revolving parts with manual power to check if the machine can turn freely.
Check the machine visually to find possible errors. (Such as burnt or scraped paint).
Then seek authorised assistance.

NB: Note that because of the smaller centrifugal force at a low number of RPM, the blades can touch the guard plates on the beam. This sound must disappear at the normal number of RPM during work.

Also note that the cutter bar under the discs will get very warm. The colour of the cutter bar gets darker after some hours of operation.

CAUTION: If you wish to test the machine for a long time, close the rear window or wear hearing protector!

3. ADJUSTMENTS AND DRIVING

CONSTRUCTION AND FUNCTION

GXT is a trailed triple disc mower for mounting behind the tractor. In order to use the machine a front mower with a minimum working width of 3 m must be mounted in front of the tractor.

GXT 12005 is without conditioner. GXT 12005 SM and GXT 15005 SM are with conditioners with PE fingers.

The main frame is mounted on a trailed suspension and transport frame in order to decrease the load on the rear axle of the tractor and to improve driving during transport. The frame has manoeuvrable wheels that follow the movements of the tractor. This is called power steering in the rest of the instruction manual.

The cutting units of the machine are suspended in a frame according to the JF-STOLL **TopSafe** principle. This causes the cutting unit to tip backwards in case of collision with stones or similar items. In order to secure an optimal adaptability to the ground the frame is furthermore pendulum suspended.

CONVERSION BETWEEN WORK AND TRANSPORT POSITION

Please note that this description only deals with GXT. Conversion of the front machine is described in a separate instruction manual.

CONVERSION FROM WORK TO TRANSPORT POSITION

1) Stop PTO. If the machine is placed in transport with PTO running, it will strongly reduce the life of the PTO shafts.
2) The cutting units are lifted by activating the lifting cylinders.

WARNING: If the cutting units are not lifted all the way up it may result in collision with the wheel or the supports for transport.

3) The cutting units are turned to transport position by activating the cylinders for conversion between work and transport position.

4) When the cutting units are in transport position the cutting units are lowered down onto the supports for transport by activating the lifting cylinders.

5) If the machine is fitted with cylinder for oversteering make sure that the cylinder is placed in middle position.

6) Close all ball valves on the machine. These are placed by the quick-release couplings.

CONVERSION FROM TRANSPORT TO WORK POSITION

1) Open all ball valves on the machine. These are placed by the quick-release couplings.
2) The cutting units are lifted by activating the lifting cylinders.

WARNING: **If the cutting units are not lifted all the way up it may result in collision with the wheel or the supports for transport.**

3) The cutting units are turned to work position by activating the cylinders for conversion between work and transport position.

4) Finally, the cutting units are lowered to the ground.

DRIVING ON PUBLIC ROAD

The machine is only built to be trailed behind a tractor in the tractor lift arms, cf. section **CONNECTION TO THE TRACTOR**.
Before you drive on public roads the machine must be in transport position. **See section on conversion.**

If the machine is fitted with the equipment “Cylinder for oversteering” the cylinder must be in middle position so that the machine drives directly behind the tractor. See section on power steering.

DANGER - ALWAYS REMEMBER:

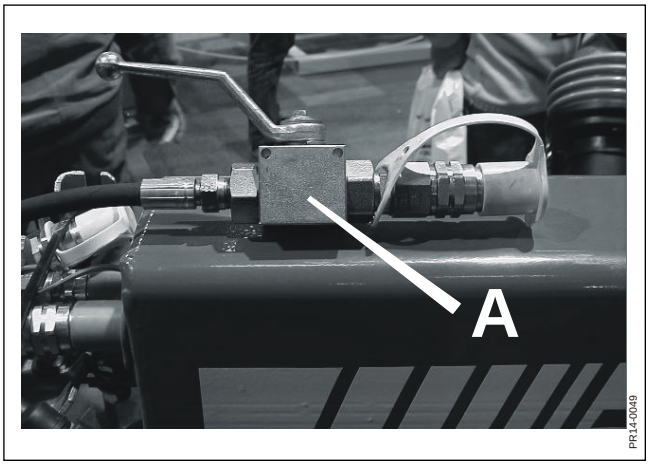

Fig. 3-1

Fig. 3-1 **BEFORE TRANSPORT CLOSE THE BALL VALVES** that are placed by the quick-release couplings by the tractor. The valve is shown in open position and is turned off when the handle is turned 90 degrees.

DANGER – TRAFFIC MARKING:

The owner is always obliged to ensure that the machine is equipped with correct lighting system and other traffic marking in accordance with the country's current rules.

Limit the transport speed to **maximum 30 km/h if the machine has not been marked with another maximum speed limit from the factory**.

POWER STEERING

The machine is equipped with manoeuvrable wheels. When driving on public roads there are some things that you should pay special attention to.

If the link arms of the tractor are not locked sideways it may cause the machine to wobble.

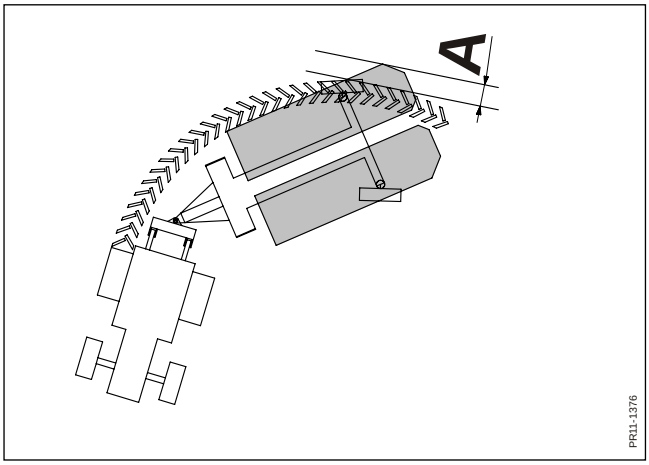

Fig. 3-2

Fig. 3-2 When turning with the machine the rear edge of the machine will reach distance **A** further out than the tractor. Therefore, always pay attention to the surroundings when turning.

AIR BRAKES

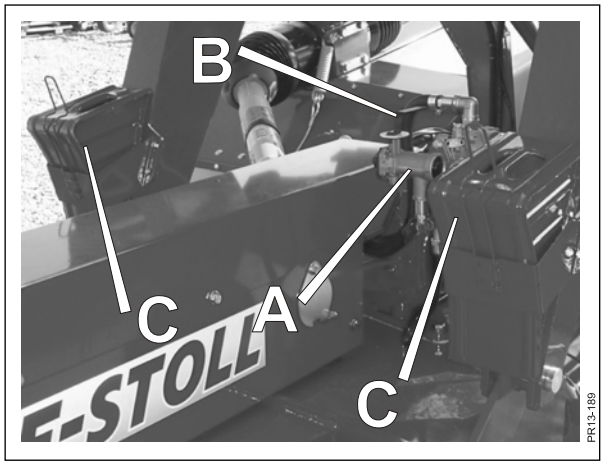

Fig. 3-3

Fig. 3-3 In certain countries the machine must be equipped with air brakes in order to meet the current Road Traffic Act.
The weight on the rear axle varies a lot from working to transport. Therefore, there is a valve **A** with a manual setting of the brake power.

As basis it must always be adjusted to full break power. If the wheels block during braking while the machine is in working position it is possible to reduce the braking power by turning handle **B**. See fig. 3-4.

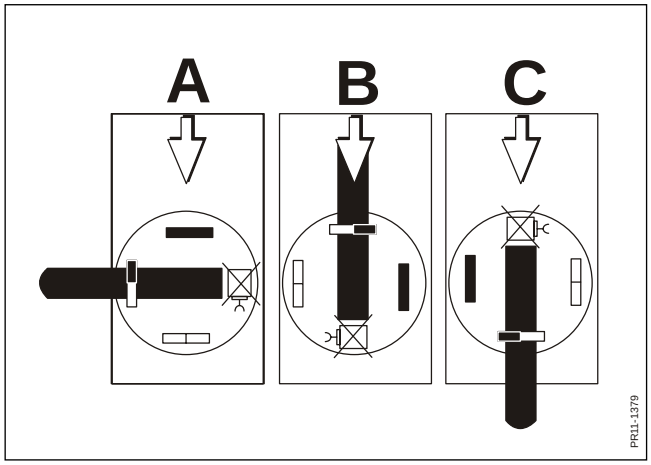

Fig. 3-4

Fig. 3-4 There are 3 settings on the valve which must be used.

A) Transport position. Full braking power.
B) Working position. Reduced braking power to avoid blocking of the wheels.
C) Brakes loosened. This function is used if the machine must be pulled by a tractor without air brakes. If there is no more air in the tank it is possible to pull without adjusting the valve.

WARNING: **When driving on public roads the valve must always be adjusted to full break power. If it isn't the braking length is increased.**

PARKING

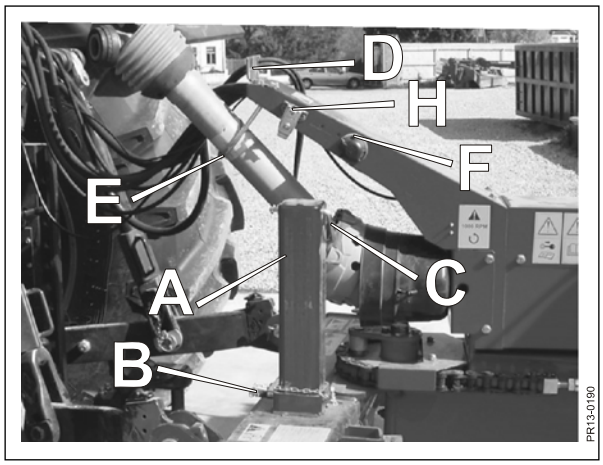

Fig. 3-5

Fig. 3-5 The machine can be parked in 2 positions. In working position with the cutting units lowered or in transport position.
Never leave the tractor before the cutting unit is resting on the ground or the machine is in transport position, the engine of the tractor has stopped, and the parking brake has been activated. This is the only way to perform a safe operation.

1) Remove pin **B** while holding handle **C**. Lower the jack **A** and fix it again with pin **B**.

2) Disconnect hoses, PTO and electric equipment from the tractor and place it in their respective holders. Place hydraulic hoses in **D**. PTO shaft in **E**. Plug for lighting equipment in **F**. Electronic box (option) is placed in the tool box. Hoses for air brakes in **H**.

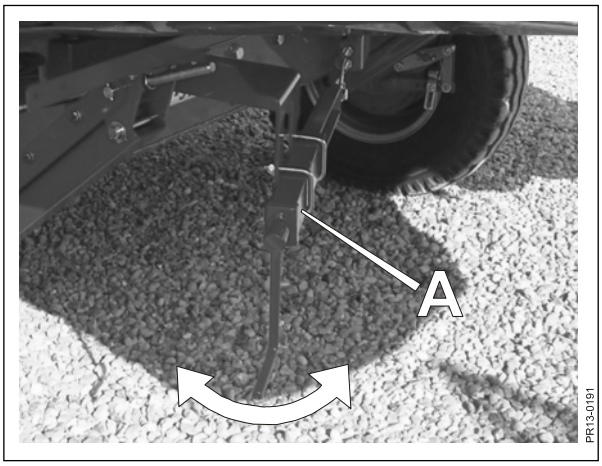

Fig. 3-6

Fig. 3-6 3) If the machine is equipped with parking brake **A** it must be activated now.

Fig. 3-3 4) Stop blocks **C** are placed on the machine, they can be placed behind the wheels.

5) Disconnect the machine.

When connecting the machine again follow the procedure in reverse order.

SETTING OF RELIEF

RELIEF OF CUTTER BAR

The relief springs are tightened from the factory, but can be re-adjusted.
.

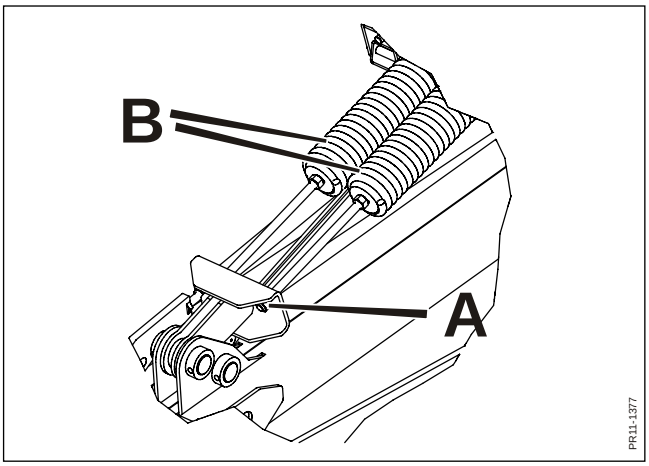

Fig. 3-7

Fig. 3-7 The relief is adjusted by turning bolt **A**. If the spring **B** is tightened the cutting unit becomes lighter. If the spring **B** is loosened the cutting unit becomes heavier. Both springs should be adjusted, so that they have the same adjustment. On certain models there are 3 springs per side.

TOP SAFE

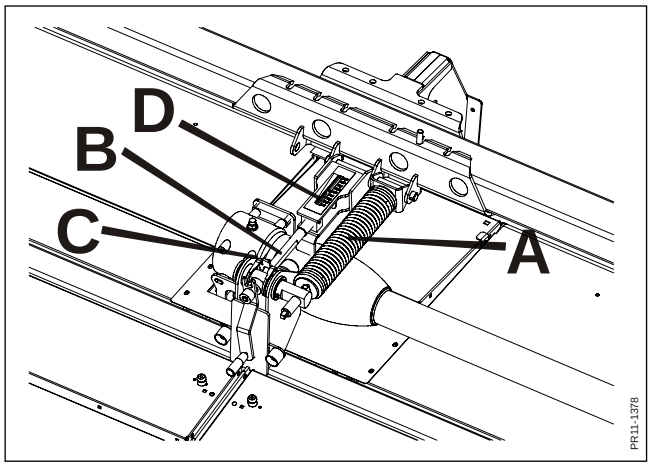

Fig. 3-8

Fig. 3-8 The cutting units of the machine are suspended in a frame according to the JF-STOLL **TopSafe** principle. This causes the cutting unit to tip backwards in case of collision with stones or similar items. There is a spring where you can adjust how much power it takes to tip the cutting unit backwards. If the stubble is uneven the spring **A** must be loosened.

WORKING IN THE FIELD

Before you start working the field make sure that GXT and the front machine both are in correct working position. See the section “Conversion between work and transport position”.
Connect the power take-out carefully and increase to the correct number of rpm, i.e. 1000 rpm before working in the crop.
When mowing, the single-acting hydraulic outlet of the tractor for raising/lowering the cutting units must be in floating position.
The speed varies from 6-20 km/h depending on the crop and the working conditions.

STUBBLE HEIGHT

Fig. 3-8 The machine has continuous adjustment of the stubble height. A spindle **B** is placed on the middle of each cutting unit. Before the spindle is turned with the enclosed all-purpose handle, the stubble height lock **C** must be tipped backwards. On the scale **D** the stubble height can be seen continuously. Both cutting units must have the same value. When the adjustment has been finished the stubble height lock **C** is tipped back.
The stubble height scale is divided into steps from 1 to 9 where 1 is the lowest stubble and 9 the highest stubble.

CONDITIONER

GXT 12005/15005 SM has a conditioner rotor with PE-fingers. The conditioner rotor rotates with **860 rpm**.

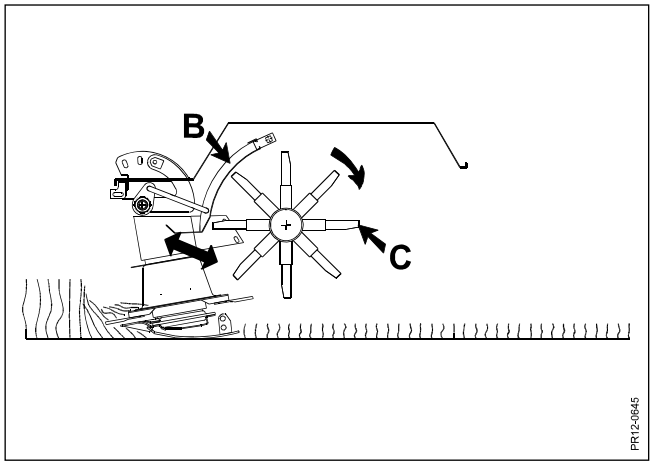

Fig. 3-9

Fig. 3-9 The degree of conditioning can be varied by changing the distance between the conditioner plate **B** and the conditioner fingers **C**.

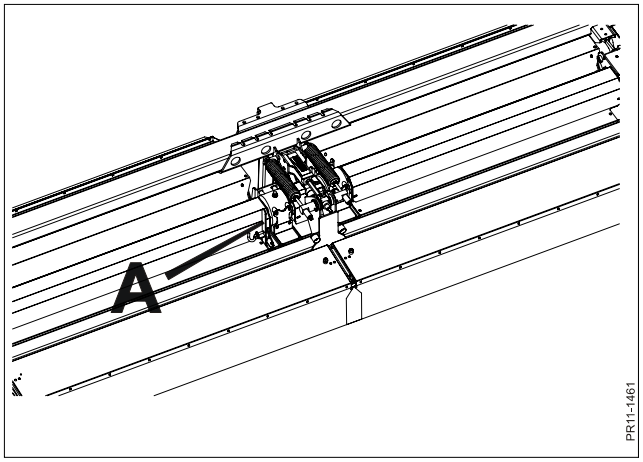

Fig. 3-10

Fig. 3-10 The conditioner plate can be placed in 3 possible positions. Adjustment is made by turning the handle **A** which can be placed in 3 positions.

In general: **Short distance – Strong conditioning**

Large distance – weak conditioning

The adjustment should be adapted to the forward speed and the state of the crop.
As basis setting it can be recommended to start in the middle position.

SAFETY SYSTEM

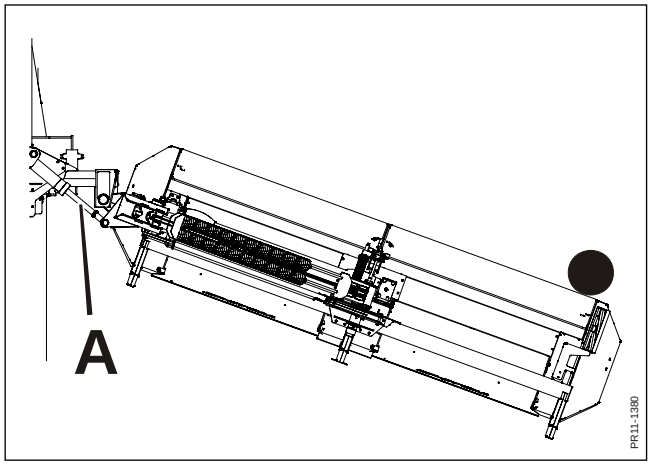

Fig. 3-11

Fig. 3-11 Besides the fact that the cutting units are suspended in a frame according to JF-STOLL's TopSafe principle there is also a hydraulic safety system which swings the cutting unit backwards in case of collision. If this happens activate the cylinder for conversion between work and transport **A** in order to get the cutting unit back into the right position. **Do <u>not</u> back with the machine.**
The release power is controlled with a pressure valve. There is one valve per cutting unit. The valve is adjusted from the factory.

TURNING

When turning on headlands or driving with lifted cutting units always make sure that the cutting units are lifted all the way up because otherwise they will not be locked.

WARNING: **If the cutting units are not lifted all the way up they may turn in the pendulum suspension and hit the ground.**

WORKING ON HILLY GROUND

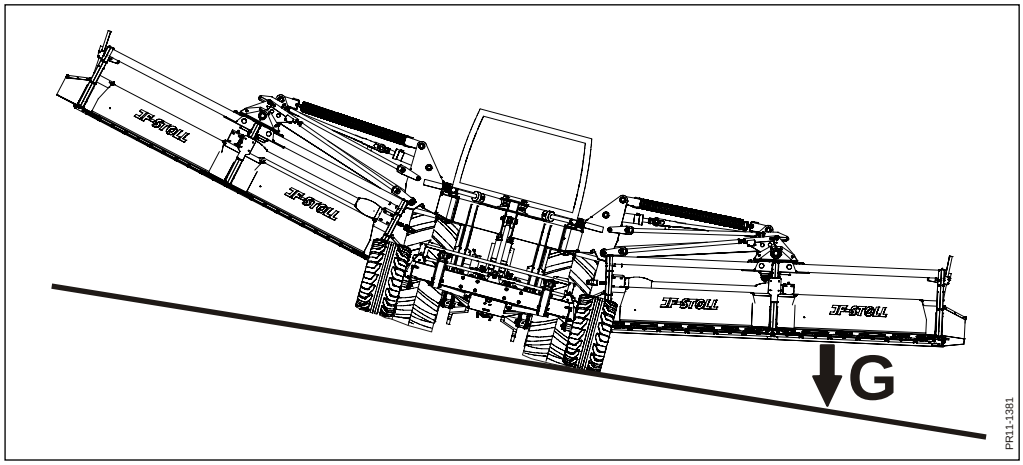

FIG. 3-12

Fig. 3-12 When working on hilly ground you must pay attention to the stability of the machine especially when driving with lifted cutting units. The weight **G** of the cutting unit will try to tip the machine and the tractor.

IMPORTANT: **Keep the cutting units in lowered position when driving on heavily sideways sloping ground. This increases the stability.**

OVERSTEERING

The machine can be fitted with cylinder for oversteering. The cylinder allows you to straighten up the machine on slopes thus avoiding stripes.

Note: If the link arms of the tractor are locked sideways it will not be necessary to straighten up the machine so much.

Fig. 3-13

Fig. 3-13 When turning stripes may occur if there is not enough overlapping with the front machine. These stripes can be removed/minimized by adjusting the cylinder.

IMPORTANT: The cylinder for oversteering does not automatically find the middle position again. You must do that yourself by using the indicator shown on fig. 3-13. The indicator must be in the middle position when driving on public roads.

INDIVIDUAL LIFT OF CUTTING UNITS

The machine can be equipped with an electric system which allows each cutting unit to be lifted individually. This can be used in case of short work mowing.

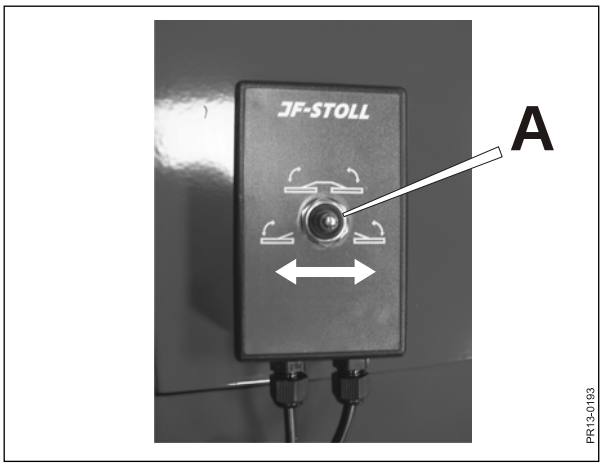

Fig. 3-14

Fig. 3-14 The electric system consists of a control box which operates two on/off valves on the machine. When the switch **A** is in the middle position both cutting units are lifted/lowered at the same time. When the switch **A** is in the left position the left cutting unit is lifted/lowered. When the switch **A** is in the right position the right cutting unit is lifted/lowered.

If you only lower one cutting unit and place the hydraulic handle in floating position the other cutting unit will automatically be lowered when the switch **A** is placed in the middle position.

IMPORTANT: When converting the machine from working to transport position and back the switch **A** must be placed in the middle position.

WARNING: **If the power to the control box is disconnected the valve will open. This will lower the cutting units to the ground. Therefore no one is allowed to stay under the cutting units.**

4. GREASING

GREASE

Always ensure that the machine has been properly greased before it starts operating.

Go through the greasing chart.

TYPE OF GREASE: Universal grease of good quality.

Rotating mechanical connections are greased with grease or oil as required.

Lubrication chart for disc mowers type <u>GXT 12005 and GXT 12005/15005 SM</u>

The following grease spots **must** be greased according to the working hour intervals indicated.

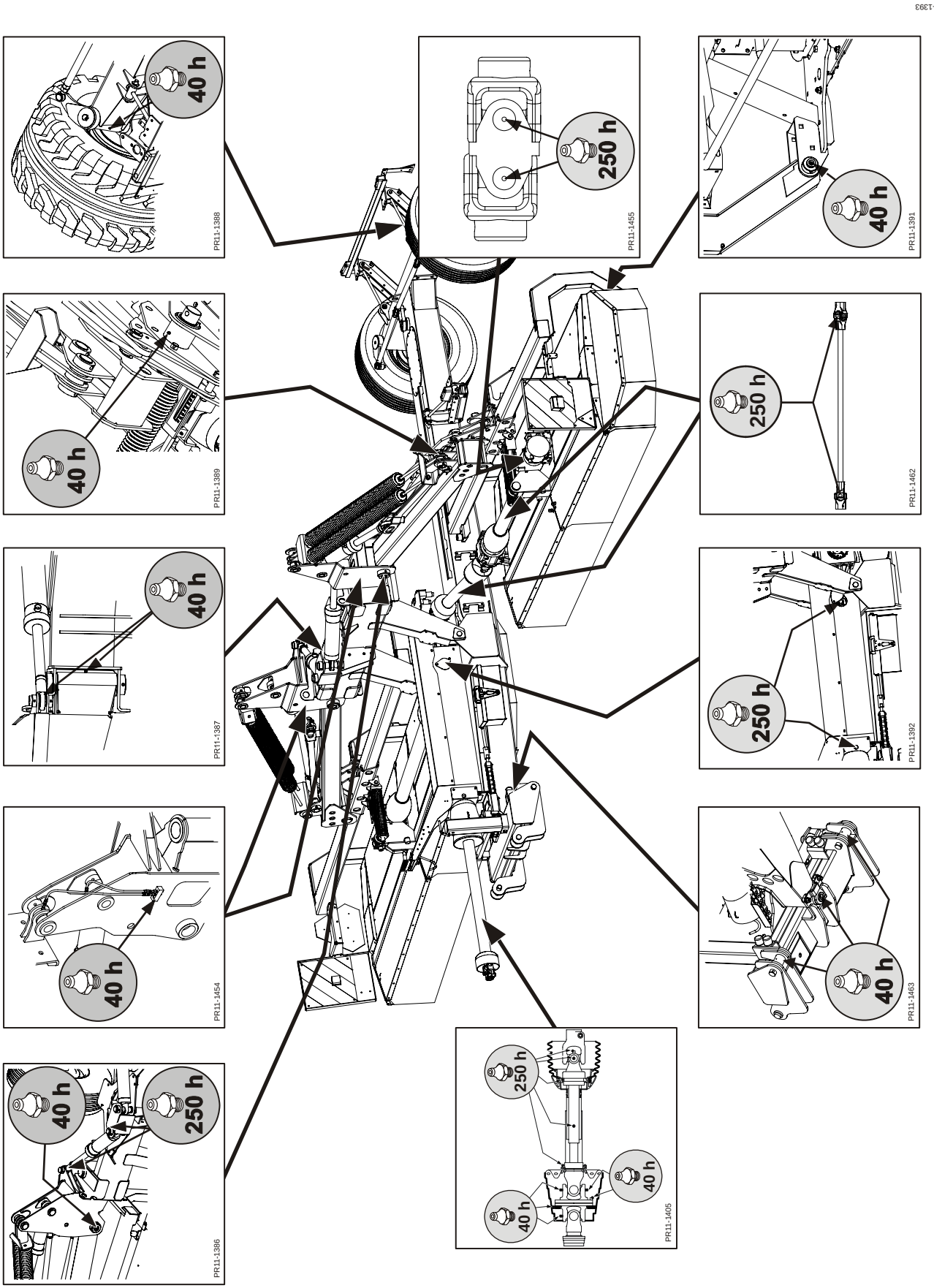

OIL IN THE CUTTER BAR

Oil content: **1.7 litre per cutter bar for GXT 12005/GXT 12005 SM**
2.25 litre per cutter bar for GXT 15005 SM

2 filling plugs **per bar** are placed on top of the cutter bars between 1st and 2nd disc in the right and left-hand side.

Oil type: Only the quality: API GL4 SAE 80W

(In certain countries API GL4 SAE 80W oil is not available). In these cases API GL4 or GL5 SAE 80W-90 oil can be used as an acceptable alternative. Never use pure SAE 90W oil in the cutter bar).

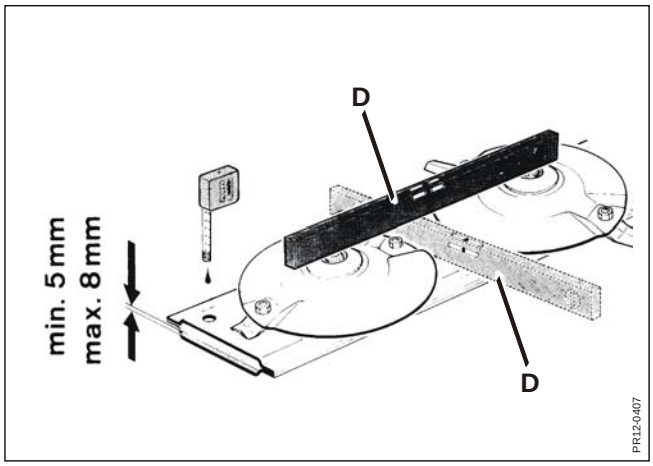

Fig. 4-1

Fig. 4-1 The oil level must be checked every day during the harvesting season.

In order to facilitate the daily oil check we recommend a permanent "oil measuring platform". This means that the check for **"horizontal cutter bar",** as shown in Fig. 4-1, only has to be made once.

Horizontal cutter bar:

Longitudinal direction: The cutting units are lowered to the ground and the stubble height is adjusted to maximum. Hereby the construction ensures that the cutter bar will tip backwards to almost horizontal position. Fine adjustment can for instance be made with the lower link arms of the tractor, or by ground adaptation.

Lateral direction: Fine adjustment can be made with e.g. lifting jack, or with distance plates.

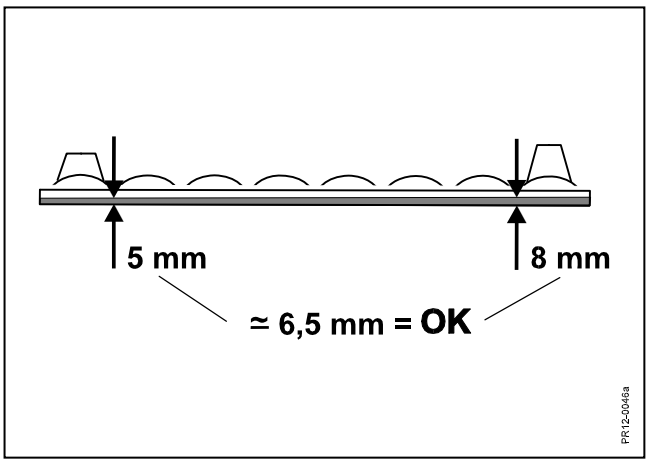

Fig. 4-2

Fig. 4-2 Oil level: 6 -7 mm

This oil level must be an average of the level measured at both filling holes.

Wait 3 minutes (cold oil: wait 15 minutes) and then check the level.

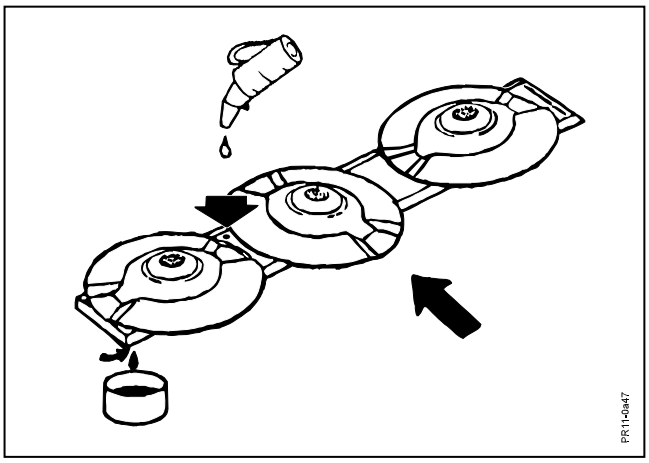

Fig. 4-3

Fig. 4-3 Oil change: First oil change after 10 working hours and then after every 250 working hours or at least once a year.

The oil is drained out at the plug in the bottom by the outer guide shoe.

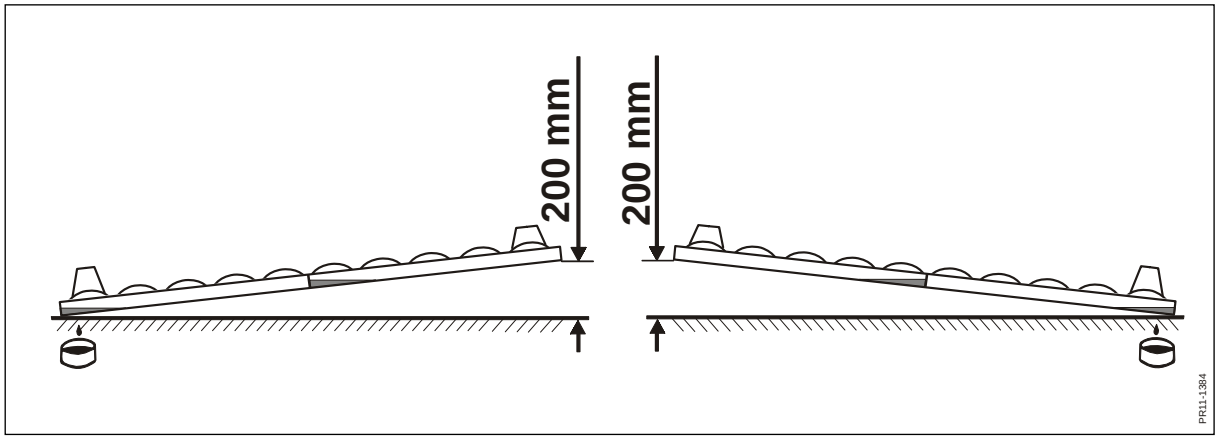

Fig. 4-4

Fig. 4-4 For oil change the cutter bar is raised minimum 200 mm to ensure optimum emptying.

Each cutting unit consists of 2 cutter bars. You must empty these by lifting the cutting unit in one side. Empty the cutter bar in question. Then lift the other side and empty the other cutter bar.

The drain plug is fitted with a magnet and should be cleaned at every oil change.

REMEMBER: **Never** fill with more oil than prescribed.
Too much oil as well as too little oil in the cutter bar causes unintended heating which in time will damage the bearings.

OIL IN THE GEARBOX ABOVE THE CUTTER BAR

CENTRAL GEARBOX

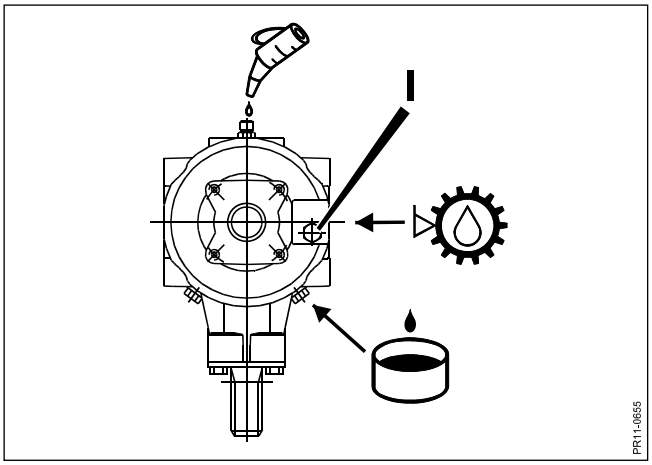

Fig. 4-6

Fig. 4-6 Oil content: **0.8 litres**

Oil type: API GL4 or GL5 SAE 80W-90

Oil level: **Check the oil level after every 50 hours of operation.**

Oil change: First oil change after 50 working hours and then after every 500 working hours or at least once a year.

GEARBOX ON TRAILER

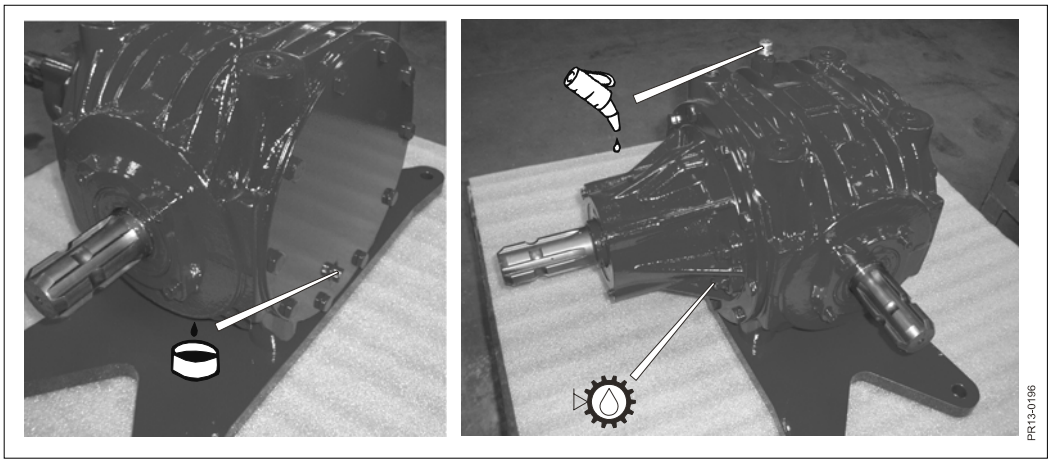

Fig. 4-7

Fig. 4-7 Oil content: **4.4 litres**

Oil type: API GL4 or GL5 SAE 80W-90

Oil level: **The oil level must be checked every day during the harvesting season.**

Oil change: First oil change after 50 working hours and then after every 500 working hours or at least once a year.

PTO SHAFTS

A separate instruction manual for the PTO shafts is enclosed. This is fixed to the PTO safety guard. This section describes the features that are specific for GXT 12005/15005.

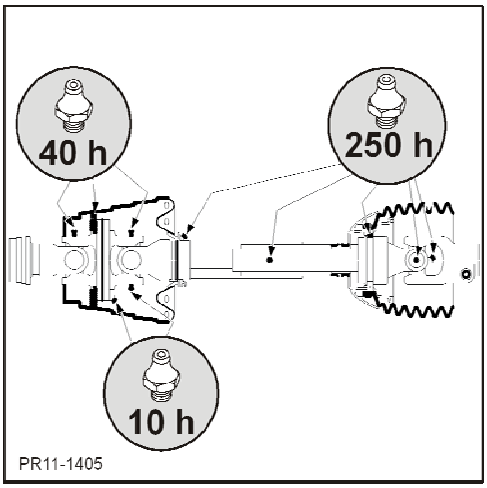

Fig. 4-8

Fig 4-8 All PTO shafts generally have a 250 hour greasing interval, except the wide-angle joint on the primary PTO shaft.

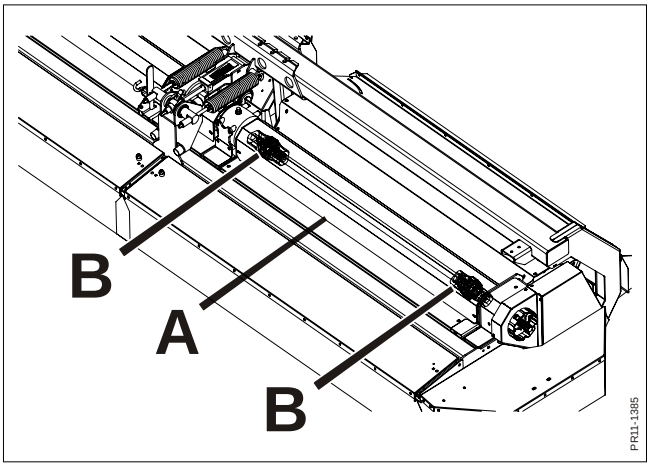

Fig. 4-9

Fig. 4-9 The guard **A** must be dismounted in order to grease the universal joints **B**. GXT 12005/15005 SM have 4 universal joints per cutting unit. The universal joints must be greased with a 250 hour interval.

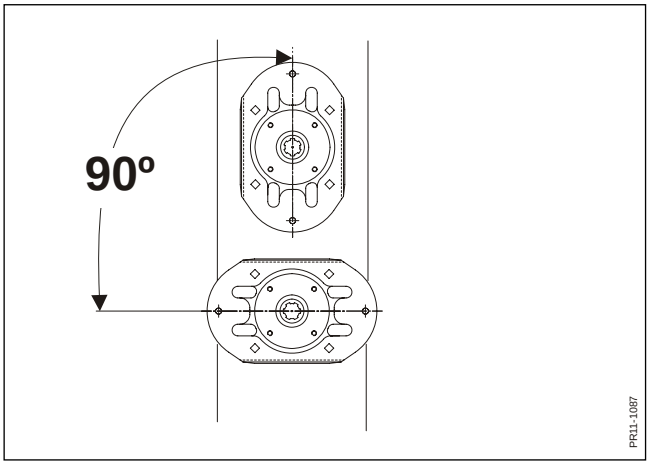

Fig. 4-10

Fig. 4-10 It is important that the discs in the middle are in a 90 degree angle in relation to each other.

WARNING: **If the discs are not in a 90 degree angle in relation to each other the blades may collide and it may result in personal injury.**

5. MAINTENANCE

IN GENERAL

WARNING: **When repairing or maintaining the machine it is especially important to ensure correct personal safety. Therefore, always park the tractor (if mounted) and the machine according to the GENERAL SAFETY INSTRUCTIONS items 1-20 in the beginning of this instruction manual.**

IMPORTANT: **Screws and bolts on your new machine must be retightened after some hours of operation.** This also applies if repairs have been made.

Torque moment $\mathbf{M_A}$ (if nothing else has been stated).

A Ø	Class: **8.8** $\mathbf{M}_A$ [Nm]	Class: **10.9** $\mathbf{M}_A$ [Nm]	Class: 12.9 $\mathbf{M}_A$ [Nm]
M 8	25	33	40
M 10	48	65	80
M 12	80	120	135
M 12x1.25	90	125	146
M 14	135	180	215
M 14x1.5	145	190	230
M 16	200	280	325
M 16x1.5	215	295	350
M 18	270	380	440
M 20	400	550	650
M 24	640	900	1100
M 24x1.5	690	960	1175
M 30	1300	1800	2300

FRICTION CLUTCH

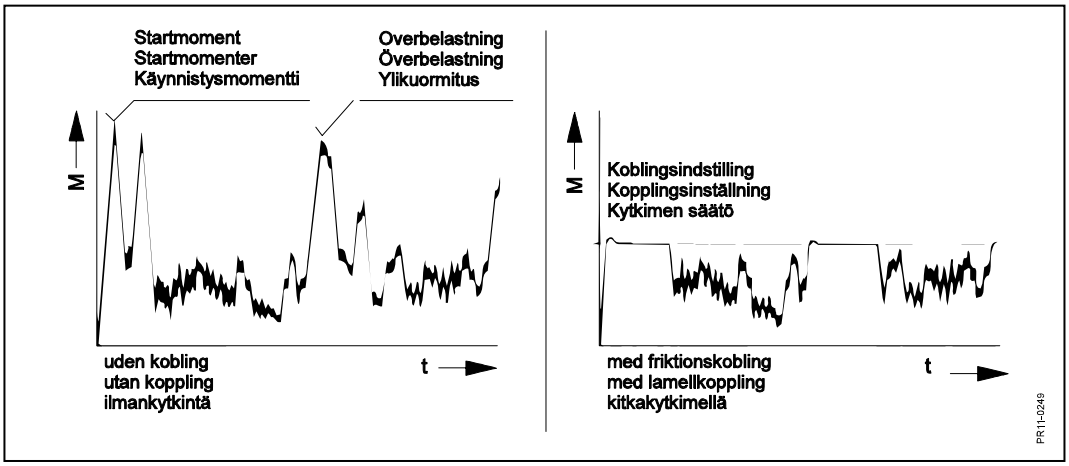

Fig. 5-1

Fig. 5-1 **In order to ensure a long life for your tractor and machine** the machine is delivered with **friction clutch** on the PTO drive shafts between the frame and cutting units. The difference between these is the direction in which the free wheeling is running. The figure illustrates how the clutch protects the transmission against high torque peaks and at the same time is capable of keeping the torque up while it slips.

In order to ensure that the clutch works as intended it must be “aired” at regular intervals **as dirt and moisture may cause the clutch to get “stuck”.**

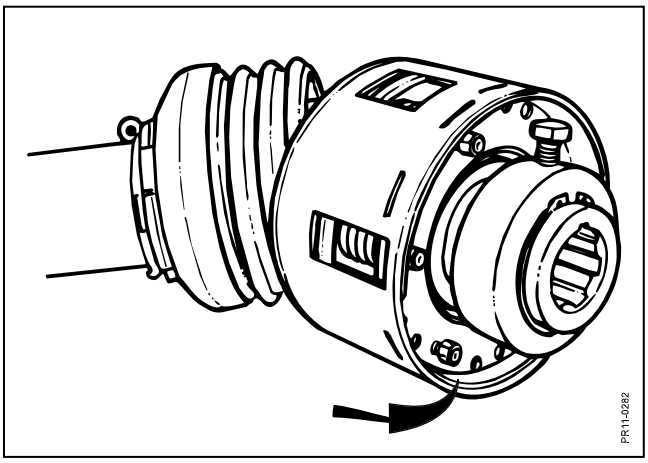

Fig. 5-2

Fig. 5-2 Before starting a new machine and after a long period of standstill, e.g. winter storage, the clutch is "aired" in the following way:

The six nuts on the flange are tightened. Hereby the springs are compressed so that they do not press on the clutch plates and the clutch can rotate freely. **Have the clutch rotate for half a minute** to remove dirt and possible rust on the plates. The nuts are **loosened** again until they are at level with the threads of the bolts, and the springs can press on the clutch plates.

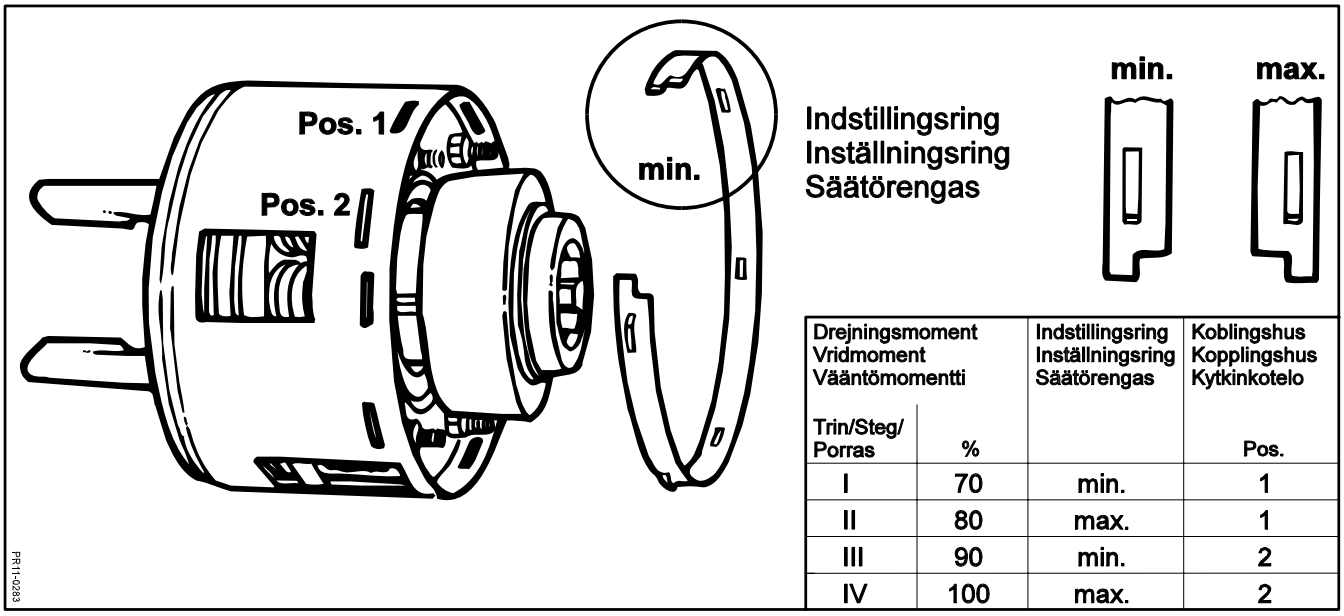

Drejningsmoment Vridmoment Vääntömomentti		Indstillingsring Inställningsring Säätörengas	Koblingshus Kopplingshus Kytkinkotelo
Trin/Steg/ Porras	%		Pos.
I	70	min.	1
II	80	max.	1
III	90	min.	2
IV	100	max.	2

Fig. 5-3

Fig. 5-3 The torque in the friction clutch has 4 different torque adjustments, which should be adapted as required. This is done by turning the adjustment ring and by choosing between 2 different positions in the clutch housing.

1. The adjustment ring has a **minimum** and a **maximum** position.

2. The clutch housing has two different sets of slots in the height into which the adjustment ring can be mounted, **pos. 1 and pos. 2.**

TORQUE ADJUSTMENT GUIDE

PTO	Torque	Adjustment
1000	1500 Nm.	Step II

The adjustment can only be made when the six nuts are tightened. After the adjustment the nuts are loosened again to the end of the bolt.

WARNING: **If the clutch is overloaded it will slip and get heated, and hence be worn quickly. Overheating will damage the friction plates. If the clutch is blocked or partly put out of function in other ways, the factory guarantee will be discontinued.**

CONTROL OF BALANCE

WARNING: **When driving in the field you must always pay attention if the machine starts vibrating more than usually or if it has jarring sounds. The discs run at up to 3000 RPM, and one broken blade may cause serious injury to persons or material damage resulting from unbalance.**

If working with a modern and closed cabin the symptoms may be difficult to discover, and once in a while you have to get out and check if all blades and rotor fingers are intact. In the long run unbalance will cause fatigue fractures and serious damage.

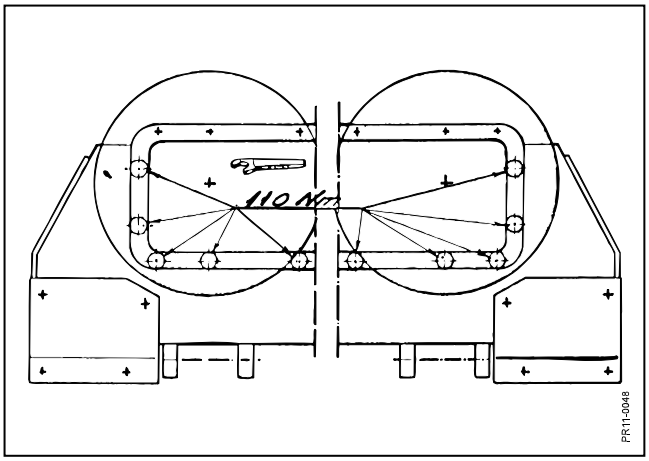

Fig. 5-4

Fig. 5-4 To avoid damage caused by vibrations the cutter bar must be tightened properly. M12 bolts: 110 Nm (11 Kpm) and M10 bolts: 70 Nm (7 Kpm). Bolts at the cutterbar ends MUST be checked regularly.

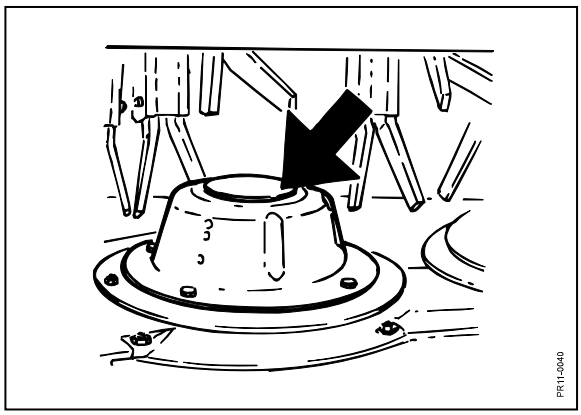

Fig. 5-6

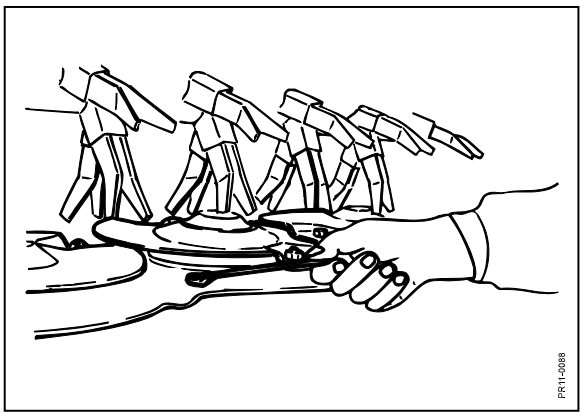

Fig. 5-5

Fig. 5-5 The bolts at stone protections must be checked at regular intervals.

Fig. 5-6 If low flow hats have been retro-fitted, they should be straightened or replaced by new ones if they are deformed.

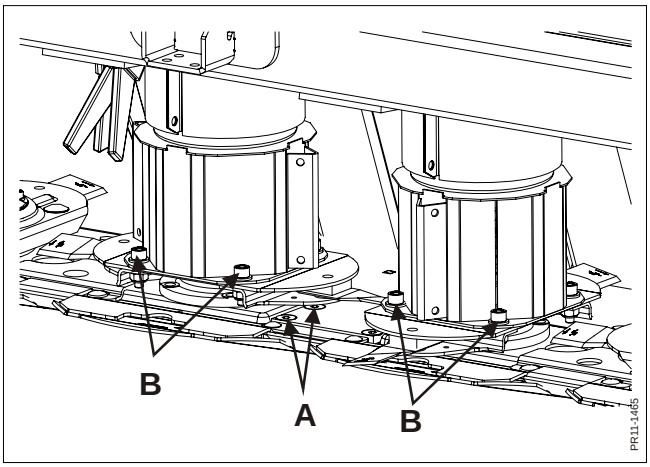

Fig. 5-7 The countersunk bolts **A** must be checked at regular intervals to see if they are loose. Tighten the bolts if necessary.
The bolts **B** which are used to fix the blade holder on the input disc should be tightened at regular intervals.

CUTTER BAR

REPAIRS:

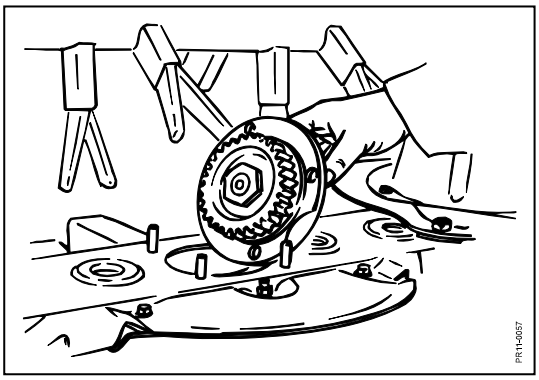

Fig. 5-8

Fig. 5-8 The GXT machines have a cutterbar where the complete disc bearing housing can be dismounted.

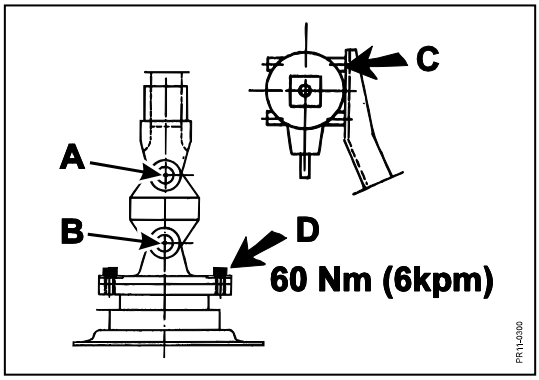

Fig. 5-9

Fig. 5-9 The PTO drive shaft for the cutterbar has been greased for life.

The PTO should run with minimum angular deviation.
The misalignment at **A** and **B** should not exceed +/- 3 mm from the center axis.
An alignment is made at the overhead gear by moving the gear in the oblong holes or by placing a spacer in between at **C**. Lock the screws **D** with LocTite 243.

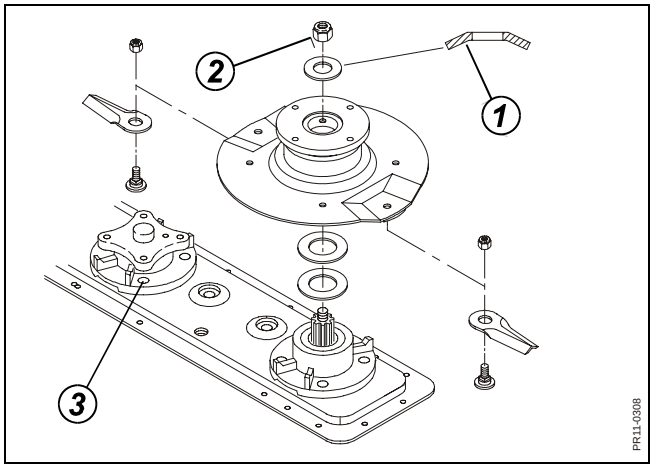

Fig. 5-10

Fig. 5-10 1. Place the spring washers as shown with the curved side upwards and downwards respectively.
2. Tighten the nut to 190 Nm.
3. The bolts which hold the disc bearing housing to the bar are tightened to 85 Nm.

DISCS AND BLADES - HDS

Discs, blade bolts and blades are made of high-alloyed, hardened materials. This heat treatment provides especially hard and ductile material which is able to withstand extreme stress. If a blade or a disc is damaged, do not attempt to weld the parts together again as the generation of heat will weaken the parts.

Damaged blades, discs, blade bolts and nuts **must be replaced by original JF-STOLL spare parts to obtain a safe operation.**

WARNING: **When replacing blades, both blades on the disc in question must be replaced as not to create an unbalance.**

CAUTION: **Always lower the cutting unit to the ground before replacing blades, blade bolts, discs and the like.**

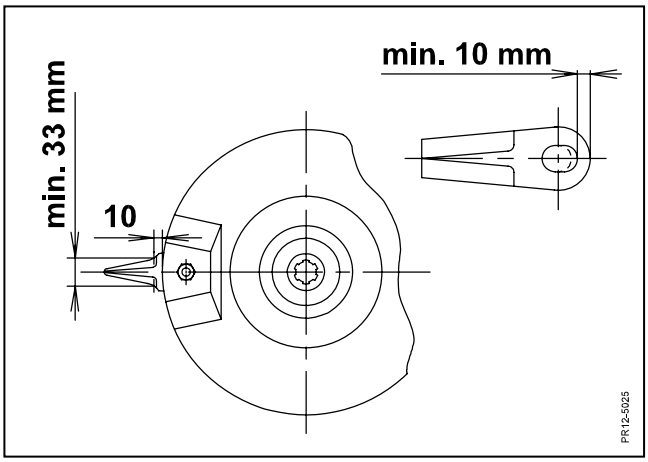

Fig. 5-11

Fig. 5-11 Blades must be replaced if:

- the blade width is less than 33 mm measured 10 mm from the edge of the disc.
- the metal thickness around the blade hole is less than 10 mm.

Bent blades must be replaced immediately.

Blade bolts and nuts must also be checked regularly, especially the tightening of the nuts. Especially after collision with foreign matter, after replacement of blades and the first time you use the machine.

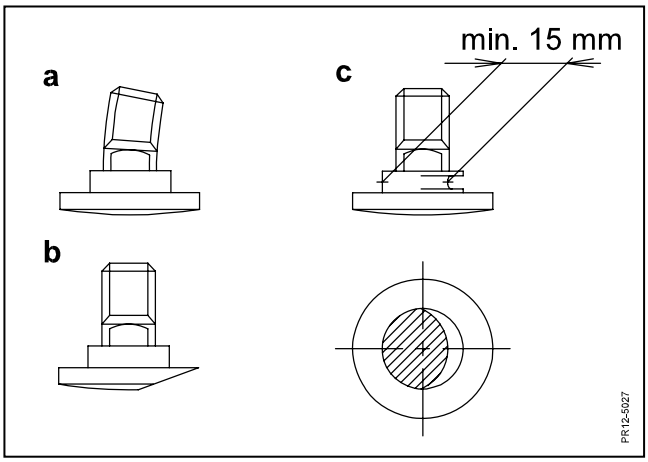

Fig. 5-12

Fig. 5-12 Blade bolts must be replaced if:

- they are deformed
- they are strongly worn on one side
- the diameter is less than 15 mm.

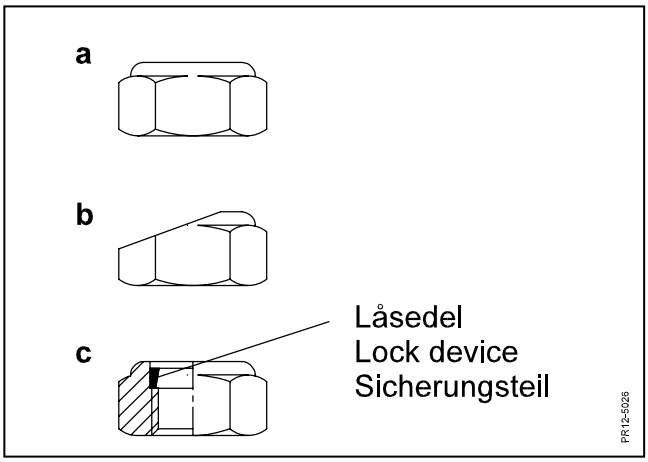

Fig. 5-13

Fig. 5-13 The special nut must be replaced if:
- it has been used more than 5 (five) times
- the height of the hexagon is less than half of the original height.
- the lock device is worn or loose.

Fig. 5-14

Fig. 5-14 To obtain a satisfactory harvesting **it is important that blades and shearbar are intact and sharp**. Replacement of blades is made by dismounting the blade bolt and pulling it out from beneath the disc. This is easily done when the blade is in the front position so that the bolt can fall out through the hole in the stone protector. Remove the old blade and mount the new one together with the blade bolt.
The blades can be used on both sides by moving the blades from one disc to another with opposite direction of rotation.

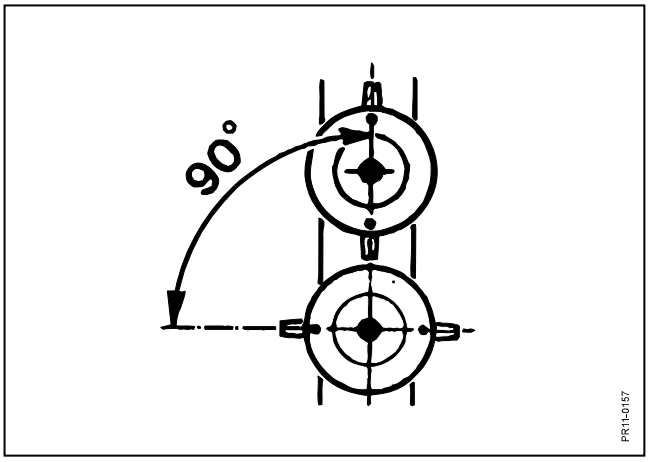

Fig. 5-15

Fig. 5-15 If discs have been dismounted they must be mounted again **staggered 90° in relation to each other**.

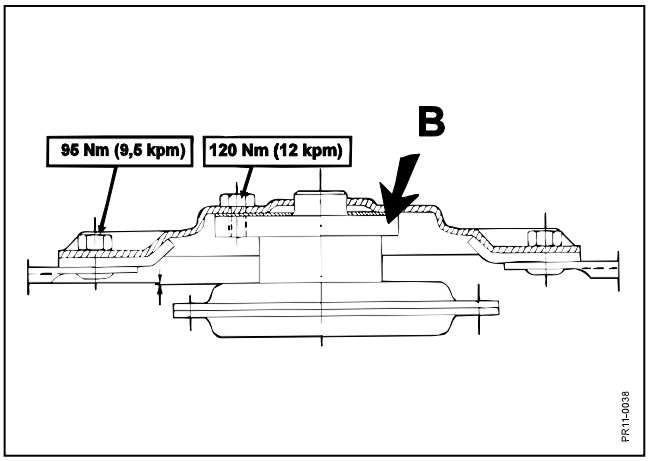

Fig. 5-16

Fig. 5-16 Make sure that the bolts have been tightened as shown.

Discs fastened with four bolts must be tightened to 120 Nm (12 kpm).

Discs fastened with central hub bolt must be tightened to 190 Nm (19 kpm).

Knife bolts must be tightened to 95 Nm (9.5 kpm).

The height of the disc can be adjusted by mounting spacers under the disc at **B**. This may be necessary when replacing the discs if the blades are not at the same height.

WARNING: **After replacement of blades, blade bolts, discs and the like check that no tools have been left on the machine.**

DISCS AND BLADES - QS

Your machine can be fitted with a disc/blade system for quick replacement of blades which has been developed to facilitate maintenance of the machine.

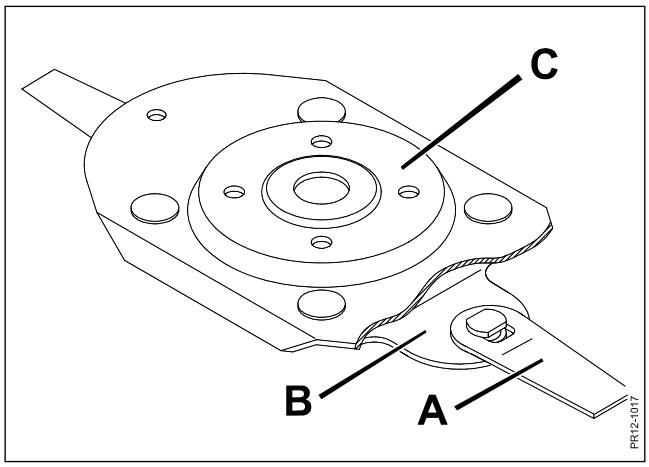

Fig. 5-17

Fig. 5-17 The system is called QS, (Quick and Safe), which indicates the quick mounting/change of blades and the high safety as blades **A** cannot unintentionally be released from the blade holder **B**, which is bolted on the disc **C**.

Discs, blade holders and blades are partly made from high-alloyed hardened materials. A special heat treatment results in an especially hard and ductile material which can handle extreme stress. If a blade or disc is damaged, do not attempt to weld the parts together again as the generation of heat will destroy the material properties and expose you and others to increased risk.

IMPORTANT: Damaged blades, discs and blade holders must be replaced by original JF-STOLL spare parts to obtain a safe operation.

WARNING: When replacing blades both blades on the disc in question must be replaced as not to create an imbalance.

CAUTION: Always lower the cutting unit to the ground before replacing blades, blade holders, discs and the like.

BLADES

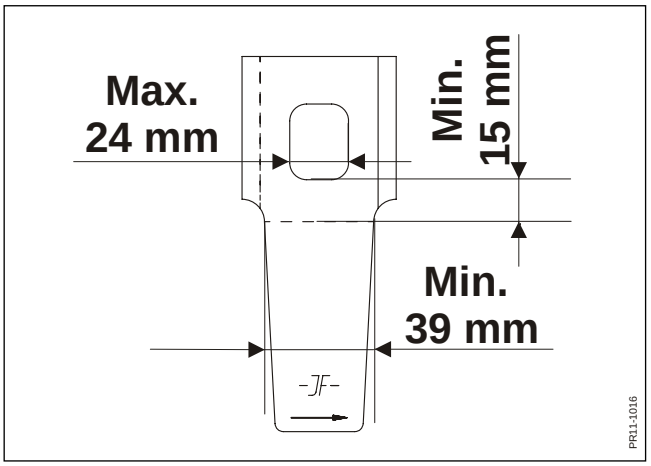

Fig. 5-18

Fig. 5-18 Blades must be replaced if:

1) The blade is bent or cracked,
2) The blade width is less than 39 mm measured 15 mm from the edge of the rotor skirt.
3) The blade hole is larger than stated.

BLADE HOLDER

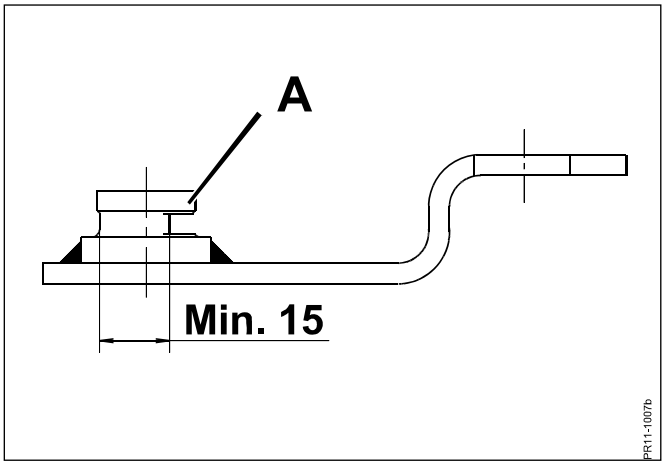

Fig. 5-19

Fig. 5-19 The blade holder must be replaced if:

1) The blade pin **A** is not in contact with the blade,
2) The blade pin **A** is strongly worn on one side,
3) The diameter of the blade pin is less than 15 mm.

IMPORTANT: Especially after collision with foreign matter, after replacement of blades and the first time you use the machine.

REPLACEMENT OF BLADES

DANGER: **It is very important to check the disc assemblies after:**

- **Collision with foreign matter, or**
- **If a blade, as an exception, is missing on the cutter bar.**

Parts can be damaged and you MUST replace parts if you have the slightest doubt whether they have been damaged, to secure against loss of rotating parts.

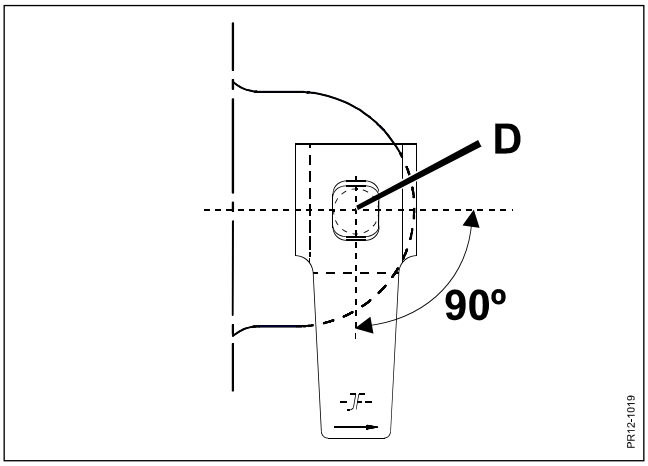

Fig. 5-20

Fig. 5-20 Turn the blade 90 degrees to working position and release the blade from the blade pin **D**.

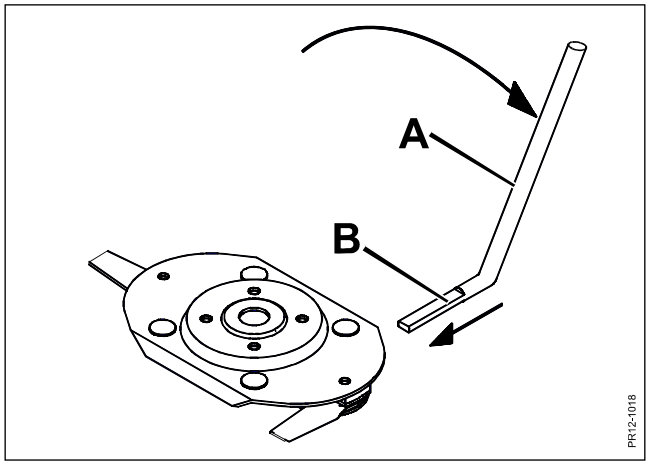

Fig. 5-21

Fig. 5-21 The supplied tool for replacement of blades **A** is placed as shown with the short end **B** behind the blade.

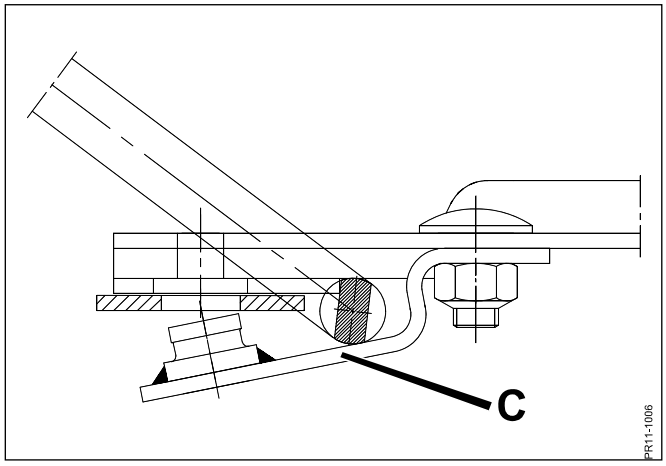

Fig. 5-22

Fig. 5-22 With a regular pull forward at the long end of the tool the blade holder **C** is pressed down.

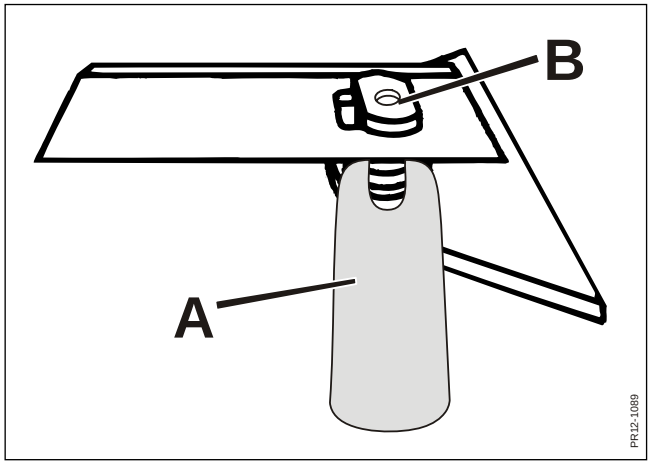

Fig. 5-23

Fig. 5-23 In connection with replacement of blades check all blade pins **B** on the discs regularly with the gauge **A** (in the spare parts package).

IMPORTANT: When the gauge A can get over the blade pin B it MUST be replaced immediately.

When mounting blades this is done in reverse order.

After this always make sure that:

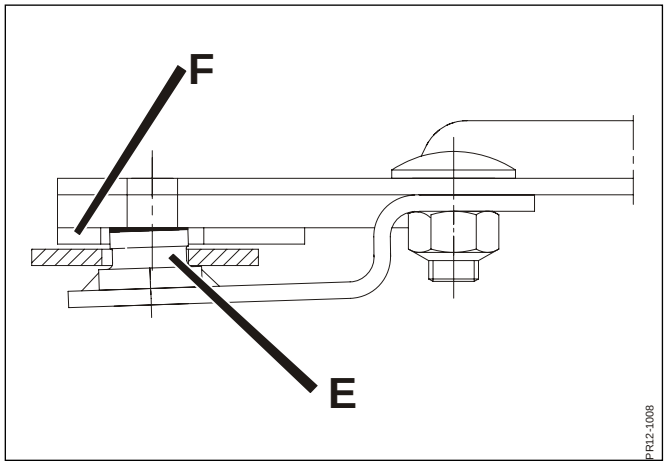

Fig. 5-24

Fig. 5-24 - There are no impurities between the contact faces of the blade pin and the disc, and it is ensured that the blade pin **E** of the blade holder has correct contact with the bottom of the disc **F**.

- The blades can turn freely from side to side. NB: The blades will in both sides stop against the blade holder.
- If the blade pin is not in contact with the disc, the blade holder should be replaced.
- All discs have both blades.
- Worn blades and the replacement tool have been removed from the machine.
- The guard has been mounted correctly again.

To obtain a good harvesting it is important that blades and shearbar are intact and sharp.

REMEMBER: By turning the blades they can be used on both sides.

DISCS – QS

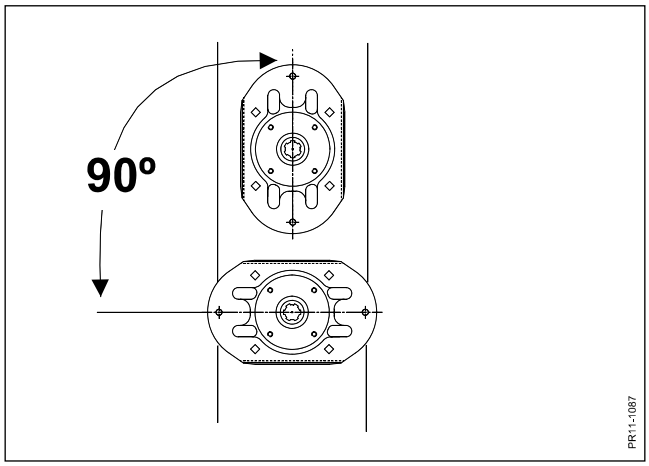

Fig. 5-25

Fig. 5-25 If discs have been dismounted they must be mounted again staggered 90° in relation to each other.

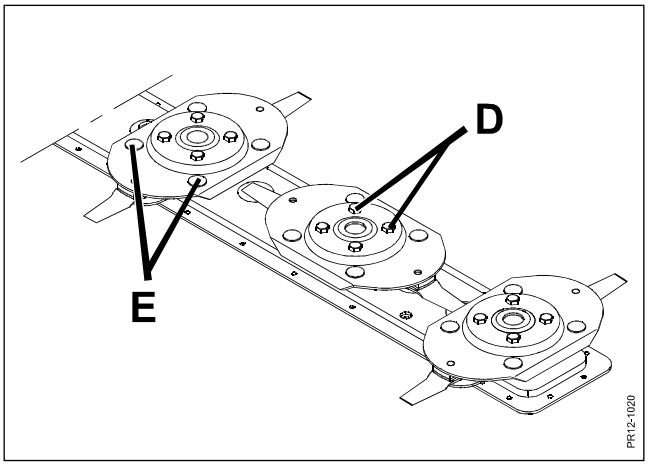

Fig. 5-26

Fig. 5-26 Make sure that the 4 bolts **D** which are used to fasten the disc to the hub of the cutter bar have been tightened to **120 Nm** (12 Kpm), and the bolts **E** which hold the blade holders are tightened to **80 Nm** (8 Kpm).

The height of the disc can be adjusted by mounting spacers under the disc. This may be necessary when replacing the discs if the blades are not at the same height.

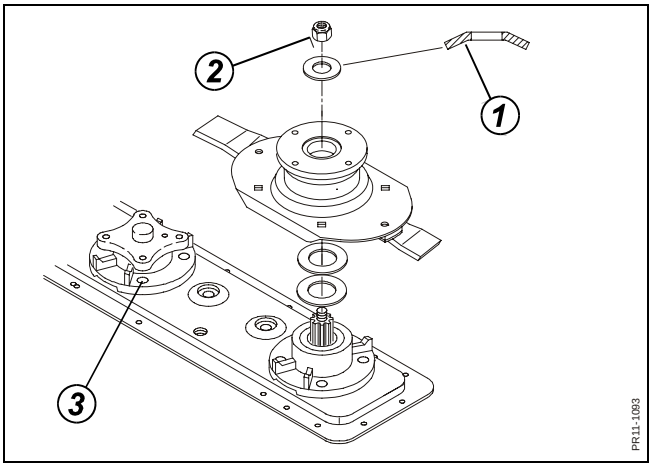

Fig. 5-27

Fig. 5-27 The spring washer **(1)** above the input disc is placed as shown with the curved side upwards. The nut **(2)** is tightened to **190 Nm** (19 Kpm).
The bolts **(3)** which hold the disc bearing housing to the bar are tightened to **85 Nm** (85 Kpm).

WARNING: **After replacement of blades, nuts or discs check that no tools have been left on the machine.**

AIR BRAKES

IMPORTANT: All repairs or maintenance of the air brake system must be carried out by a specialist.

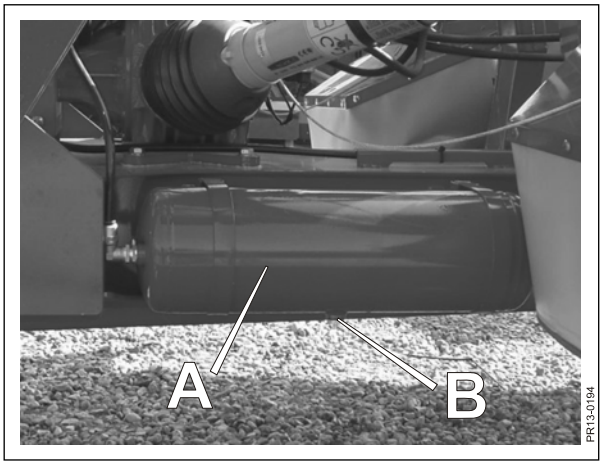

Fig. 5-28

Fig. 5-28 Once every day you must drain the air tank **A** for water. Pull the ring on the drain valve **B** to drain the air tank.

A filter is integrated with the quick-release coupling. If the filter is blocked the air will pass unfiltered through the quick-release coupling. That may cause damage to other components in the brake system.
Therefore it is necessary to clean the filter regularly.

CONDITIONER

Replace defect fingers to avoid crop waste. Furthermore, the conditioner rotor will be out of balance resulting in a reduction of the life of the bearings, among other things.

TIGHTENING OF V-BELTS

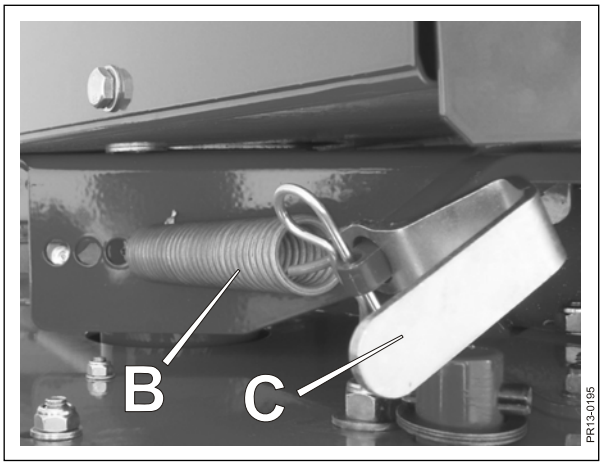

Fig. 5-29

Fig. 5-29 The V-belts are held tight with a tension pulley.

The tension pulley is tightened automatically by a spring **B**. The spring should be adjusted so that there is always at least 1-2 mm “air” between the spring coils. Adjustment is made by moving the handle **C**.

TYRES

Check in the diagram below which tyre pressure is current for your disc mower:

	GXT 12005	GXT 12005 SM	GXT 15005 SM
Tyre dimension	12.5/80-18 AW	12.5/80-18 AW	12.5/80-18 AW
Recommended tyre pressure bar/PSI	3.3 / 48	4 / 58	5 / 72,5
Minimum tyre pressure bar/PSI*	2.3 / 34	3 / 44	4.3 / 62
Tyre dimension (option)	500/50-17 FL+	500/50-17 FL+	500/50-17 FL+
Recommended tyre pressure bar/PSI	1.8 / 26	2.1 / 31	2.8 / 41
Minimum tyre pressure bar/PSI*	1.2 / 18	1.4 / 21	2.4 / 35

*) Minimum tyre pressure can be used when driving in areas where extra large carrying capacity is required (meadows, sandy areas or the like). **On public roads speed limits may not exceed 30 km/h at minimum tyre pressure.**

At regular intervals you should check the tyre pressure and make sure that the wheel bolts have been tightened properly.

6. INTERRUPTIONS

PROBLEM	POSSIBLE CAUSE	REMEDY	SEE PAGE
Stubble uneven or bad cutting.	Wrong relief. Number of rpm on the tractor PTO too low. Blades are dull or missing. Discs, stone protectors and flow caps are deformed.	Check the relief springs Check if the tractor PTO runs with 1000 rpm. Turn or replace the blades. Replace deformed parts.	29 55 46
*) Stripes in stubble.	The inclination of the cutter bar is not ideal for the crop in question. Accumulation of material on the cutter bar.	Reduce the inclination of the cutter bar. Increase the driving speed. Mount flow caps on the discs	30 46
Uneven flow through the machine.	Check if conditioner fingers are worn or missing. Distance between conditioner plate and rotor too big.	Replace worn conditioner fingers. Turn fingers with the straight edge in the direction of rotation. Adjust the conditioner plate so the distance at the front is 10-15 mm. Increase the driving speed.	 30 31
The machine vibrates/ uneven operation	Check if blades are damaged or missing. Defective PTO drive shaft Defective bearings. Defective flow caps and intensifiers	Mount missing blades. Check that the PTO drive shafts are in order. Check if bearings are loose or damaged. Replace flow hats and intensifiers	55 46
Power requirement seems too high		Remove flow caps on the discs	46
Gearbox heats Cutter bar heats	Wrong oil level Wrong oil level	Check oil level in gearbox (maximum temperature approx. 80° C.). Check oil level in cutter bar (maximum temperature, 90-100° C.).	40 38

*) Especially short, strong spring crops harvested under unfavourable conditions.

7. STORAGE (WINTER STORAGE)

When the season is over, the preparation for winter storage should be made immediately after. First, clean the machine thoroughly. Dust and dirt absorb moisture and moisture increases the formation of rust. **Be careful when cleaning with a high pressure cleaner. Never** spray directly on the bearings and grease all grease points carefully after cleaning so that possible water is pressed out of the bearings.

The following points are instructions how to prepare for winter storage.

- Check the machine for wear and other defects – note down the necessary parts you will need before the next season and order the spare parts.
- Dismount the PTO drive shafts, lubricate the profile tubes and keep them in a dry place.
- Spray the machine with a coat of rust-preventing oil. This is especially important on the parts polished with use.
- Change the oil in the hydraulic system, the cutterbar and the gear boxes.
- Store the machine in a ventilated engine house. Lay up the machine to unload the tyres.

8. SPARE PARTS ORDER

When ordering spare parts please state machine type, serial number and manufacturing year. This information is printed on the machine plate. We request you to write this information on the first page in the spare parts book supplied with the machine as soon as possible so that you have the information at hand when ordering spare parts.

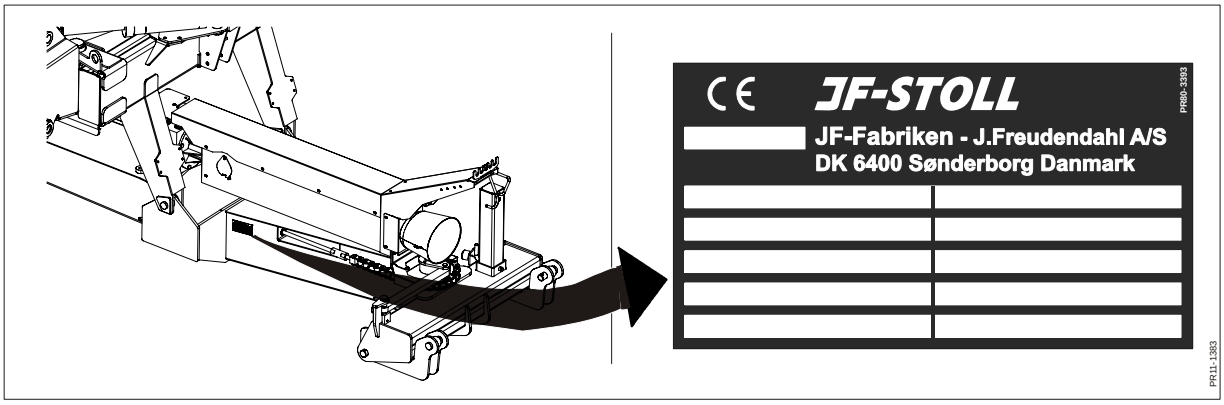

9. MACHINE DISPOSAL

When the machine is worn-out it must be disposed of in a proper way. Observe the following:

- The machine must **not** be placed somewhere outside, - it must be emptied of oil (gearboxes and hydraulic system). These oils must be handed over to a destruction company.
- Disassemble the machine and separate the individual recycling parts, e.g. tyres, hydraulic hoses, hydraulic valves etc.
- Hand over the usable parts to an authorised recycling centre. The large scrapping parts are handed over to an authorised breaker's yard.

WARRANTY

JF-Fabriken - J. Freudendahl A/S, 6400 Sønderborg, Denmark, hereafter called **"JF"**, grants warranty to any buyer of new JF machines from authorized JF-dealers.

The warranty covers remedy of material and production faults. This warranty is valid within a year after date of sale to end-user.

The warranty is invalidated in the following cases:

1. **The machine has been used for other purposes than those described in the instruction manual.**
2. **Improper use.**
3. **Damage caused by external sources, e.g. lightning or falling objects.**
4. **Insufficient maintenance.**
5. **Transport damage.**
6. **The construction of the machine has been modified without JF's written permission.**
7. **Unskilled repair of the machine.**
8. **Unoriginal spare parts have been used.**

JF cannot be held responsible for loss of income or legal claim as a result of faults either of the owner or of a third party. Nor is JF responsible for wages beyond current agreements in connection with replacement of warranty parts.

JF is not responsible for the following costs:

1. **Normal maintenance such as expenses for oil, grease and minor adjustments.**
2. **Transport of machine to and from workshop.**
3. **The dealer's travelling expenses or freight charges to and from the user.**

Warranty is not granted on wearing parts unless it can clearly be proved that JF has committed a fault.

The following is regarded as wearing parts:

Protective canvases, blades, blade suspensions, shearbars, guide shoes, stone protections, discs, rotor skirts, crimper parts, tyres, tubes, brake shoes, chain tightener parts, guards, hydraulic hoses, conveyors, vertical auger and tub, wheel-fixing bolts and nuts, snap rings, sockets, PTO-shafts, clutches, gaskets and seals, tooth belts, V-belts, chains, sprocket wheels, carriers, conveyor chain slats, rake- and pick-up tines, rubber seals, rubber paddles, cutter blades, chute liner and lining for spreading platform, shredding blades incl. bolts and nuts, spreading rotors and vanes for farmyard manure spreaders.

In addition, the user must note the following:

1. **The warranty is only valid if the dealer has undertaken a pre-delivery check and has given instruction to the end user in the use of the machine.**
2. **The warranty cannot be transferred to others without JF's written permission.**
3. **The warranty can be nullified if repair is not undertaken immediately.**

Specialist in grassland machinery and complete diet mixers

When it comes to green feed techniques, JF-STOLL has gained a reputation as one of the world's leading suppliers and specialists. As a specialist manufacturer for over 50 years, we have gained a vast amount of experience from right around the world and, more importantly, unique regional requirements.

We also receive important inspiration in our development work through a close and continuous dialogue with customers, dealers and agricultural researchers.

No matter which type of JF-STOLL-machine you chose, you can be sure to obtain the best result to obtain a top result - in the shape of high performance and operational reliability, minimum maintenance, flexible working possibilities and optimal operating economy.

Dealer

JF-STOLL

JF-Fabriken · J. Freudendahl A/S
Linde Allé 7 · Postbox 180
DK-6400 Sønderborg · Denmark
Phone. +45 74 12 51 51 · Fax +45 74 42 52 51
www.jf-stoll.com

PIGB-120X-02 GXT 12005 / GXT 12005 SM / GXT 15005 SM - 03.09 Printed in Denmark